RE 36 ∅36 mm, Graphite Brushes, 70 Watt

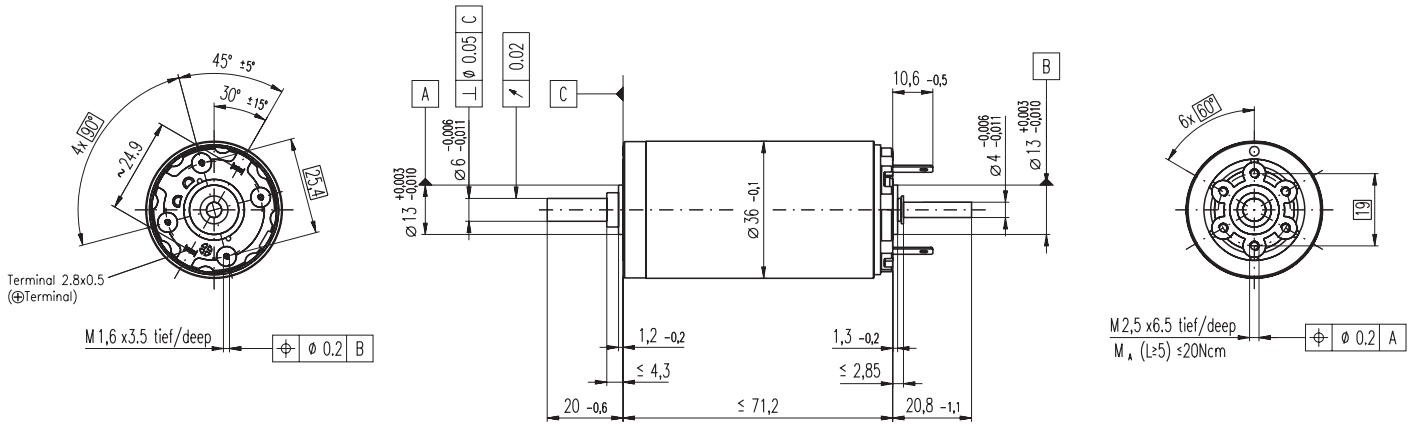

M 1:2

Stock program
Standard program
Special program (on request)

Order Number

			118797	118798	118799	118800	118801	118802	118803	118804	118805	118806	118807	118808	118809	118810
Motor Data																
	Values at nominal voltage															
1	Nominal voltage	V	18.0	24.0	32.0	42.0	42.0	48.0	48.0	48.0	48.0	48.0	48.0	48.0	48.0	48.0
2	No load speed	rpm	6610	6210	6790	7020	6340	6420	5220	4320	3450	2830	2280	1780	1420	1180
3	No load current	mA	153	105	88.6	70.4	61.4	54.6	41.6	32.6	24.7	19.5	15.2	11.5	8.97	7.31
4	Nominal speed	rpm	5880	5530	6120	6350	5660	5740	4520	3600	2720	2090	1530	1010	651	390
5	Nominal torque (max. continuous torque)	mNm	70.2	78.2	77.1	77.9	79.9	79.5	81.5	82.2	83.6	84.1	84.1	83.8	84.1	83.1
6	Nominal current (max. continuous current)	A	2.90	2.25	1.82	1.45	1.33	1.18	0.978	0.813	0.660	0.545	0.439	0.343	0.275	0.226
7	Stall torque	mNm	730	783	832	866	786	785	627	504	403	326	258	198	158	127
8	Starting current	A	28.6	21.5	18.7	15.3	12.6	11.1	7.22	4.80	3.06	2.04	1.30	0.784	0.501	0.334
9	Max. efficiency	%	84	85	86	86	86	86	85	84	82	81	79	77	75	72
	Characteristics															
10	Terminal resistance	Ω	0.628	1.11	1.71	2.74	3.35	4.32	6.65	10.0	15.7	23.5	36.8	61.3	95.8	144
11	Terminal inductance	mH	0.0988	0.201	0.300	0.487	0.597	0.760	1.15	1.68	2.62	3.87	5.96	9.70	15.1	21.9
12	Torque constant	mNm / A	25.5	36.4	44.5	56.6	62.6	70.7	86.9	105	131	160	198	253	315	380
13	Speed constant	rpm / V	375	263	215	169	152	135	110	90.9	72.7	59.8	48.2	37.8	30.3	25.1
14	Speed / torque gradient	rpm / mNm	9.23	8.05	8.27	8.18	8.14	8.25	8.41	8.65	8.67	8.80	8.96	9.17	9.21	9.51
15	Mechanical time constant	ms	6.00	5.89	5.84	5.81	5.81	5.80	5.81	5.81	5.82	5.83	5.84	5.86	5.85	5.88
16	Rotor inertia	gcm²	62.0	69.9	67.5	67.8	68.1	67.2	66.0	64.2	64.1	63.3	62.2	61.1	60.7	59.0

Specifications

	Thermal data	
17	Thermal resistance housing-ambient	6.4 K / W
18	Thermal resistance winding-housing	3.4 K / W
19	Thermal time constant winding	44.2 s
20	Thermal time constant motor	1120 s
21	Ambient temperature	-30 ... +100°C
22	Max. permissible winding temperature	+125°C
	Mechanical data (ball bearings)	
23	Max. permissible speed	12000 rpm
24	Axial play	0.05 - 0.15 mm
25	Radial play	0.025 mm
26	Max. axial load (dynamic)	5.6 N
27	Max. force for press fits (static)	5.6 N
	(static, shaft supported)	1200 N
28	Max. radial loading, 5 mm from flange	28 N
	Other specifications	
29	Number of pole pairs	1
30	Number of commutator segments	13
31	Weight of motor	350 g

Values listed in the table are nominal.
Explanation of the figures on page 49.

⚠ Tolerances may vary from the standard specification.

Option
Preloaded ball bearings

Operating Range

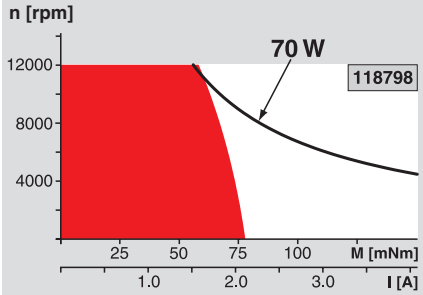

Comments

Continuous operation
In observation of above listed thermal resistance (lines 17 and 18) the maximum permissible winding temperature will be reached during continuous operation at 25°C ambient.
= Thermal limit.

Short term operation
The motor may be briefly overloaded (recurring).

Assigned power rating

maxon Modular System

Overview on page 16 - 21

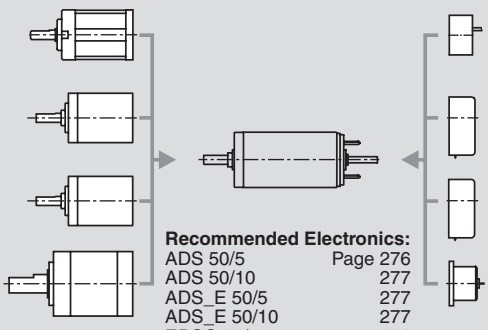

Planetary Gearhead
∅32 mm
0.4 - 2.0 Nm
Page 237

Planetary Gearhead
∅32 mm
0.75 - 4.5 Nm
Page 239

Planetary Gearhead
∅32 mm
1.0 - 6.0 Nm
Page 240

Planetary Gearhead
∅42 mm
3 - 15 Nm
Page 244

Recommended Electronics:

ADS 50/5	Page 276
ADS 50/10	277
ADS_E 50/5	277
ADS_E 50/10	277
EPOS 24/5	294
EPOS2 50/5	295
EPOS P 24/5	297
Notes	**18**

Encoder MR
256 - 1024 CPT,
3 channels
Page 259

Encoder HEDS 5540
500 CPT,
3 channels
Page 262

Encoder HEDL 5540
500 CPT,
3 channels
Page 264

DC-Tacho DCT
∅22 mm
0.52 V
Page 271