National Semiconductor

LM3812/LM3813

OBSOLETE
September 22, 2011

Precision Current Gauge IC with Ultra Low Loss Sense Element and PWM Output

General Description

The LM3812/LM3813 Current Gauges provide easy to use precision current measurement with virtually zero insertion loss (typically 0.004Ω). The LM3812 is used for high-side sensing and the LM3813 is used for low-side sensing.

A Delta Sigma analog to digital converter is incorporated to precisely measure the current and to provide a current averaging function. Current is averaged over 50 msec time periods in order to provide immunity to current spikes. The ICs have a pulse-width modulated (PWM) output which indicates the current magnitude and direction. The shutdown pin can be used to inhibit false triggering during start-up, or to enter a low quiescent current mode.

The LM3812 and LM3813 are factory-set in two different current options. The sense range is −1A to +1A or −7A to +7A. The sampling interval for these parts is 50ms. If faster sampling is desired, please refer to the data sheets for the part numbers LM3814 and LM3815.

Key Specifications

- Ultra low insertion loss (typically 0.004Ω)
- 2V to 5.25V supply range
- ±2% accuracy at room temperature (includes accuracy of the internal sense element) (LM3812-1.0, LM3813-1.0)
- Low quiescent current in shutdown mode (typically 2.5 μA)
- 50 msec sampling interval

Features

- No external sense element required
- PWM output indicates the current magnitude and direction
- PWM output can be interfaced with microprocessors
- Precision ΔΣ current-sense technique
- Low temperature sensitivity
- Internal filtering rejects false trips
- Internal Power-On-Reset (POR)

Applications

- Battery charge/discharge gauge
- Motion control diagnostics
- Power supply load monitoring and management
- Resettable smart fuse

Connection Diagrams

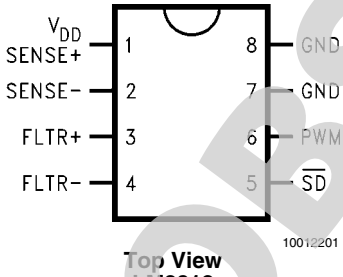

Top View
LM3812

for High-Side Sensing

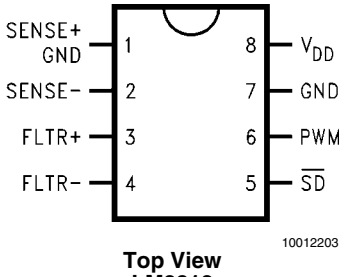

Top View
LM3813
for Low-Side Sensing

OBSOLETE

Ordering Information

Order No.#	Sense Range	Sampling Interval*	Sensing Method	NS Package Number‡	Package Type	Supplied As:
LM3812M-1.0	±1A	50 ms	High-side	M08A	SO-8	95 units in Rails
LM3812MX-1.0	±1A	50 ms	High-side	M08A	SO-8	2.5k units on Tape and Reel
LM3812M-7.0	±7A	50 ms	High-side	M08A	SO-8	95 units in Rails
LM3812MX-7.0	±7A	50 ms	High-side	M08A	SO-8	2.5k units on Tape and Reel
LM3813M-1.0	±1A	50 ms	Low-side	M08A	SO-8	95 units in Rails
LM3813MX-1.0	±1A	50 ms	Low-side	M08A	SO-8	2.5k units on Tape and Reel
LM3813M-7.0	±7A	50 ms	Low-side	M08A	SO-8	95 units in Rails
LM3813MX-7.0	±7A	50 ms	Low-side	M08A	SO-8	2.5k units on Tape and Reel

Suffix M indicates that the part is available in Surface Mount package. Suffix X indicates that the part is available in 2.5k units on Tape and Reel.

* Current is sampled over a fixed interval. The average current during this interval is indicated by the duty cycle of the PWM output during next interval.

‡ The Package code M08A is internal to National Semiconductor and indicates an 8-lead surface mount package, SO-8.

OBSOLETE

Pin Descriptions (High-Side, LM3812)

Pin	Name	Function
1	SENSE+, V_{DD}	High side of internal current sense, also supply voltage.
2	SENSE–	Low side of internal current sense.
3	FLTR+	Filter input — provides anti-aliasing for delta sigma modulator.
4	FLTR–	Filter input.
5	$\overline{SD}$	Shutdown pin. Connected to V_{DD} through a pull up resistor for normal operation. When low, the IC goes into a low current mode (typically 3 µA).
6	PWM	PWM output indicates the current magnitude and direction.
7	GND	Ground
8	GND	Ground

Pin Descriptions (Low-Side, LM3813)

Pin	Name	Function
1	SENSE+, GND	High side of internal current sense, also ground.
2	SENSE–	Low side of internal current sense.
3	FLTR+	Filter input – provides anti-aliasing for delta sigma modulator.
4	FLTR–	Filter input.
5	$\overline{SD}$	Shutdown pin. Connected to V_{DD} through a pull up resistor for normal operation. When low, the IC goes into a low current mode (typically 3 µA).
6	PWM	PWM output indicates the current magnitude and direction.
7	GND	Ground
8	V_{DD}	V_{DD} (supply)

100122 Version 13 Revision 3 Print Date/Time: 2011/09/22 15:32:17

Absolute Maximum Ratings (Note 1)

If Military/Aerospace specified devices are required, please contact the National Semiconductor Sales Office/ Distributors for availability and specifications.

Absolute Maximum Supply Voltage	5.5V
Power Dissipation	(Note 2)
ESD Susceptibility (Note 3)	1.5 kV
Sense Current (peak, for 200 msec) (Note 4)	10A
Sink Current for PWM pin	1mA
Voltage on Pin 5	5.25V
Maximum Junction Temperature	150°C
Storage Temperature	−65°C to +150°C
Lead Temperature (Soldering, 10 sec)	260°C

Operating Ratings (Note 1)

Input Voltage	2.0V to 5.25V
Sense Current (continuous) (Note 4)	7A
Junction Temperature Range	−40°C to +125°C

Electrical Characteristics

LM3812-1.0, LM3813-1.0

V_{DD} = 5.0V for the following specifications. Supply bypass capacitor is 1 µF and filter capacitor is 0.1 µF.

Symbol	Parameter	Conditions	Typ (Note 5)	Limit (Note 6)	Units
I_{ACC}	Average Current Accuracy (Note 7)	at 0.9A current	0.9		A
				0.882 / **0.864**	A (min)
				0.918 / **0.936**	A (max)
e_n	Effective Output Noise (rms)		2		mA

LM3812-7.0, LM3813-7.0

V_{DD} = 5.0V for the following specifications. Supply bypass capacitor is 1 µF and filter capacitor is 0.1 µF.

Symbol	Parameter	Conditions	Typ (Note 5)	Limit (Note 6)	Units
I_{ACC}	Average Current Accuracy (Note 7)	at 2.5A current (Note 8)	2.5		A
				2.400 / **2.350**	A (min)
				2.600 / **2.650**	A (max)
e_n	Effective Output Noise (rms)		20		mA

Common Device Parameters

Unless otherwise specified, V_{DD} = 5.0V for the following specifications. Supply bypass capacitor is 1 µF and filter capacitor is 0.1 µF.

Symbol	Parameter	Conditions	Typ (Note 5)	Limit (Note 6)	Units
I_{Q1}	Quiescent Current	Normal Mode, $\overline{SD}$ = high	100		µA
				160	µA (max)
I_{Q2}	Quiescent Current	Shutdown Mode, $\overline{SD}$ = low	2.5		µA
				10	µA (max)
D_{RES}	PWM Resolution		0.1		%
t_S	Sampling Time		52		ms
				40	ms (min)
				80	ms (max)
f_P	Frequency of PWM Waveform		20		Hz
				12.5	Hz (min)
				25	Hz (max)
V_{TH}	Threshold High Level for $\overline{SD}$		1.2		V
				1.8	V (min)
V_{TL}	Threshold Low Level for $\overline{SD}$		1.3		V
				0.7	V (max)

OBSOLETE

100122 Version 13 Revision 3 Print Date/Time: 2011/09/22 15:32:17

Symbol	Parameter	Conditions	Typ (*Note 5*)	Limit (*Note 6*)	Units
V_{OH}	Logic High Level for PWM	Load current = 1 mA, 2V ≤ V_{DD} ≤ 5.25V	V_{DD} − 0.05	V_{DD} − 0.2	V V (min)
V_{OL}	Logic Low Level for PWM	Sink current = 1 mA, 2V ≤ V_{DD} ≤ 5.25V	0.04	0.2	V V (max)
P_I	Insertion Loss	I_{SENSE} = 1A (*Note 9*)	0.004		Ω

Note 1: Absolute Maximum Ratings indicate limits beyond which damage to the device may occur. Operating Ratings indicate conditions for which the device is intended to be functional, but do not guarantee specific performance limits. For guaranteed specifications and test conditions, see Electrical Characteristics. The guaranteed specifications apply only for the test conditions listed. Some performance characteristics may degrade when the device is not operated under the listed test conditions.

Note 2: At elevated temperatures, devices must be derated based on package thermal resistance. The device in the surface-mount package must be derated at θ_{JA}= 150°C/W (typically), junction-to-ambient.

Note 3: The human body model is a 100 pF capacitor discharged through a 1.5 kΩ resistor into each pin.

Note 4: The absolute maximum peak and continuous currents specified are not tested. These specifications are dependent on the θ_{JA}, which is 150°C/W for the S08 package.

Note 5: Typical numbers are at 25°C and represent the most likely parametric norm. Specifications in standard type face are for T_J= 25°C and those with **boldface type** apply over **full operating temperature ranges.**

Note 6: Limits are 100% production tested at 25°C. Limits over the operating temperature range are guaranteed through correlation using Statistical Quality Control (SQC) methods. The limits are used to calculate National's Averaging Outgoing Quality Level (AOQL).

Note 7: There is a variation in accuracy over time due to thermal effects. Please refer to the "PWM Output and Current Accuracy" section for more information.

Note 8: The PWM accuracy for LM3812-7.0 and LM3813-7.0 depends on the amount of copper area under pins 1 and 2, and the layout. Please refer to the "PWM Output and Current Accuracy" section for more information.

Note 9: The tolerance of the internal lead frame resistor is corrected internally. The temperature coefficient of this resistor is 2600 ppm/°C.

OBSOLETE

100122 Version 13 Revision 3 Print Date/Time: 2011/09/22 15:32:17

Typical Performance Characteristics

Supply bypass capacitor is 0.1 µF and filter capacitor is 0.1 µF.

Measured Current vs Actual Current (LM3812-1.0 and LM3813-1.0)

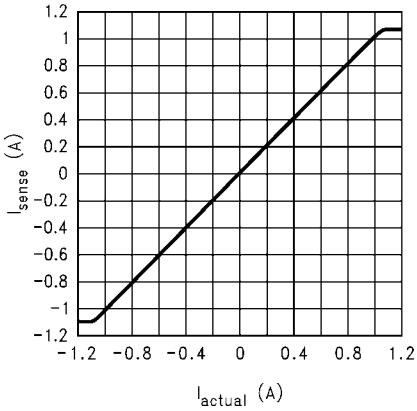

10012215

Measured Current vs Actual Current (LM3812-7.0 and LM3813-7.0)

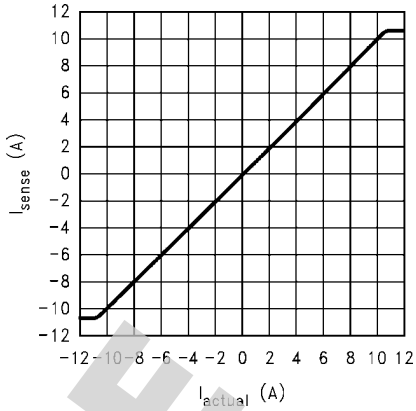

10012224

PWM Frequency vs Supply Voltage

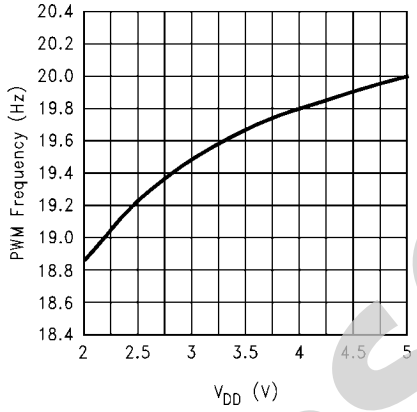

10012213

PWM Frequency vs Temperature

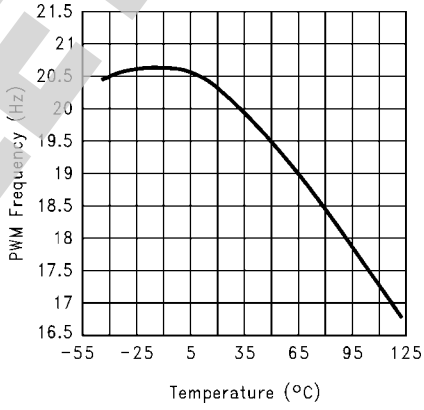

10012216

Operating Current vs Supply Voltage

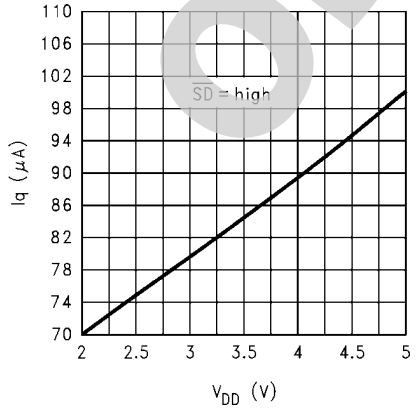

10012218

Shutdown Current vs Supply Voltage

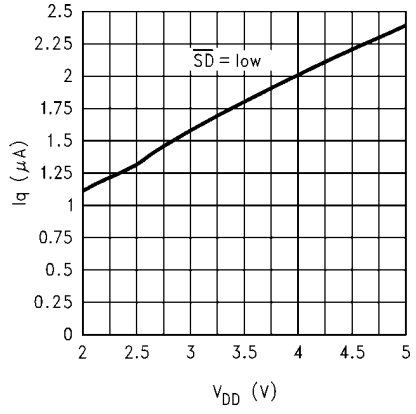

10012219

OBSOLETE

100122 Version 13 Revision 3 Print Date/Time: 2011/09/22 15:32:17

Operating Current vs Temperature

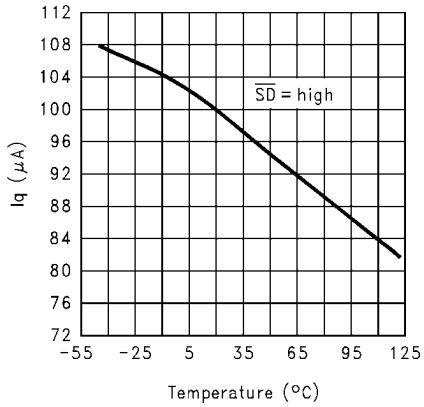

10012220

Shutdown Current vs Temperature

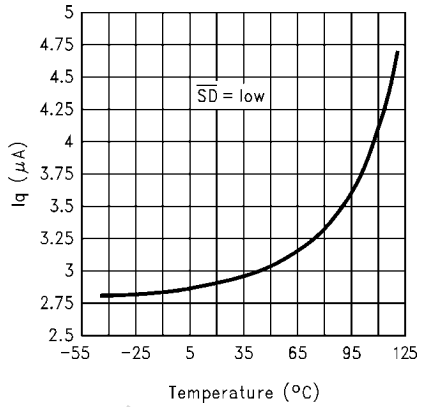

10012221

Current vs Duty Cycle

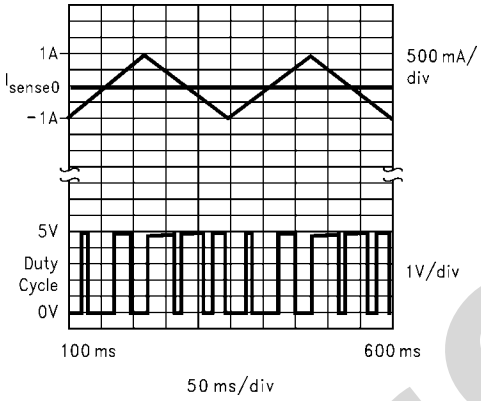

10012222

Accuracy vs Supply Voltage

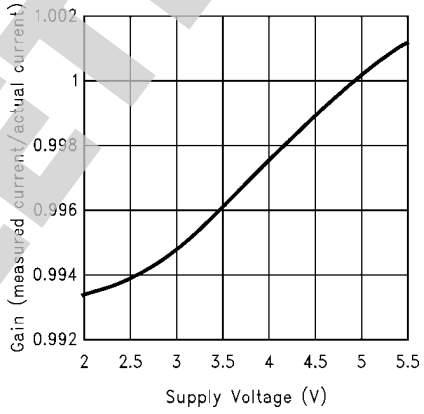

10012228

Accuracy vs Temperature (LM3812-1.0 and LM3813-1.0)

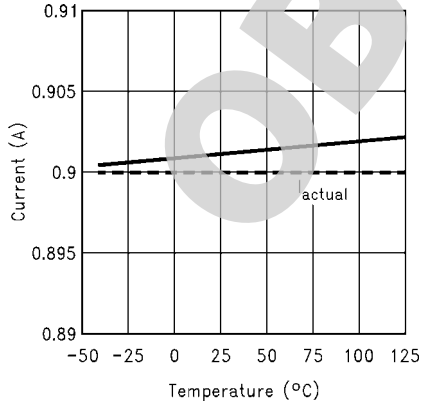

10012229

Accuracy vs Temperature (LM3812-7.0 and LM3813-7.0)

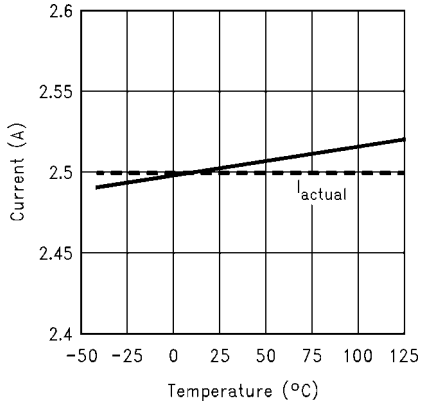

10012230

OBSOLETE

Error vs Current (LM3812-1.0 and LM3813-1.0)
(*Note 10*)

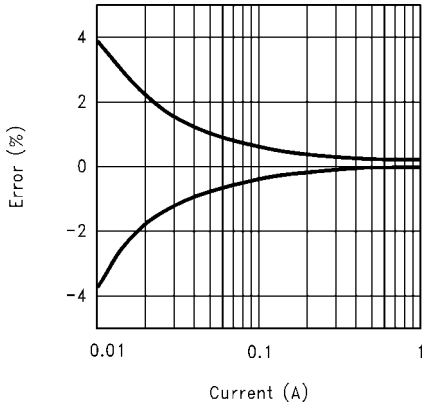

10012227

Error vs Current (LM3812-7.0 and LM3813-7.0)
(*Note 10*)

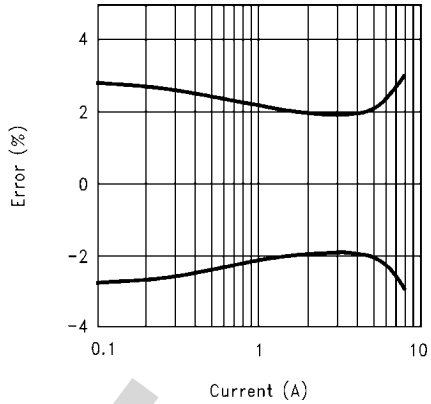

10012231

Note 10: These curves represent a statistical average such that the noise is insignificant.

OBSOLETE

100122 Version 13 Revision 3 Print Date/Time: 2011/09/22 15:32:17

Typical Application Circuits

In the application circuits, the 0.1 µF ceramic capacitor between pins 1 and 8 is used for bypassing, and the 0.1 µF ceramic capacitor between pins 3 and 4 is used for filtering. Shutdown ($\overline{SD}$) is tied to V_{DD} through a 10 kΩ resistor.

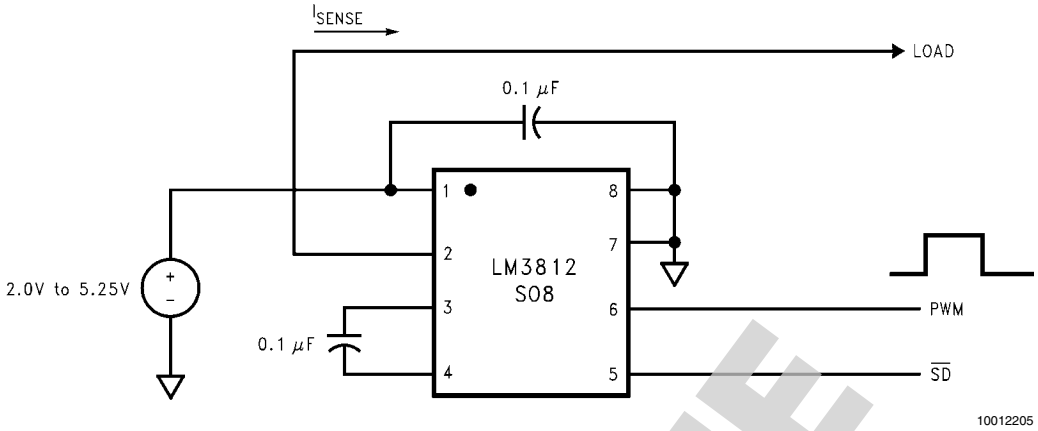

FIGURE 1. High Side Sense

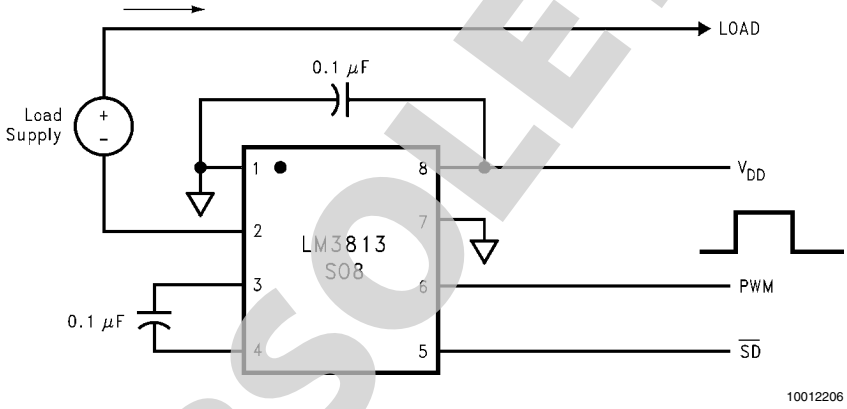

FIGURE 2. Low Side Sense

OBSOLETE

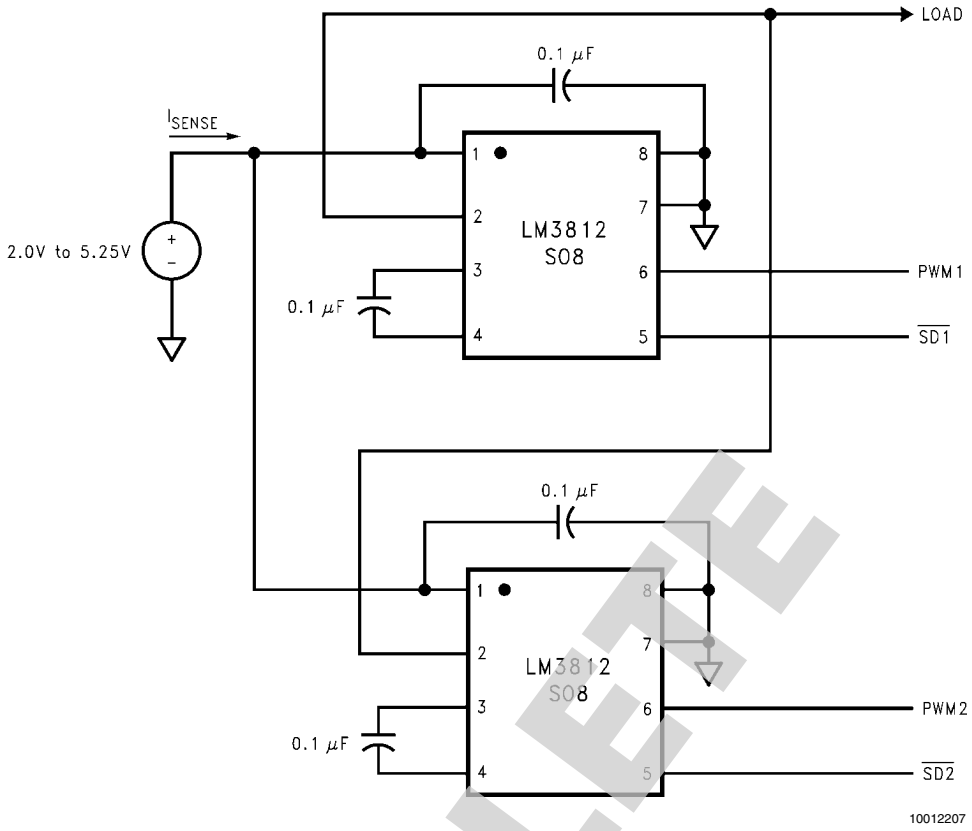

FIGURE 3. Paralleling LM3812 for Higher Load Current
$I_{TOTAL} = 2.2(D_1–0.5)I_{MAX} + 2.2(D_2–0.5)I_{MAX}$
where D_1 is the duty cycle of PWM1 and D_2 is the duty cycle of PWM2.
Please refer to the Product Operation section for more information.

OBSOLETE

100122 Version 13 Revision 3 Print Date/Time: 2011/09/22 15:32:17

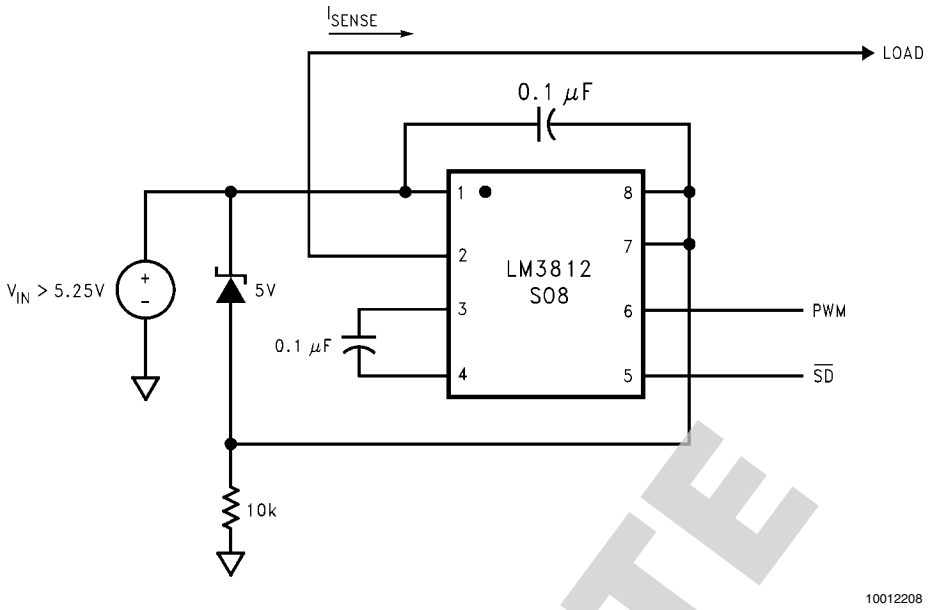

FIGURE 4. High Voltage Operation — V_{IN} Greater Than 5.25V (High Side Sense) (PWM output is referred to Pin 7)

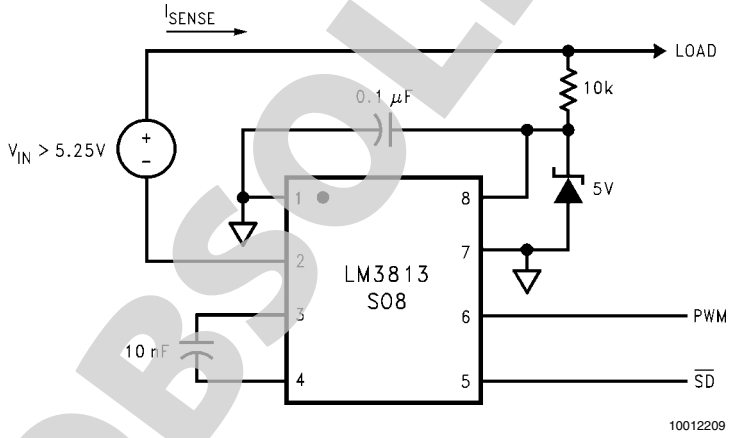

FIGURE 5. High Voltage Operation — V_{IN} Greater Than 5.25V (Low Side Sense)

OBSOLETE

100122 Version 13 Revision 3 Print Date/Time: 2011/09/22 15:32:17

Product Operation

The current is sampled by the delta-sigma modulator, as illustrated in *Figure 6*. The pulse density output of the delta-sigma modulator is digitally filtered. The digital output is then compared to the output of a digital ramp generator. This produces a PWM output. The duty cycle of the PWM output is proportional to the amount of current flowing. A duty cycle of 50% indicates zero current flow. If the current is flowing in positive direction, the duty cycle will be greater than 50%. Conversely, the duty cycle will be less than 50% for currents flowing in the negative direction. A duty cycle of 95.5% (4.5%) indicates the current is at I_{MAX} ($-I_{MAX}$). The IC can sense currents from $-I_{MAX}$ to $+I_{MAX}$. Options for I_{MAX} are 1A or 10A. The sense current is given by:

$$I_{SENSE} = 2.2\ (D-0.5)(I_{MAX})$$

where D is the duty cycle of the PWM waveform, and I_{MAX} is the full scale current (1A or 10A). Similarly, the duty cycle is given by:

$$D = [I_{SENSE}/(2.2\ I_{MAX})] + 0.5$$

For quick reference, see the Conversion Tables in *Table 1* and *Table 2*.

The user should note that, while the LM3812-7.0/ LM3813-7.0 will read 10A full scale, it is rated for 10A operation for a duration of no more than 200 msec, and 7A operation continuously.

In this IC, the current is averaged over 50 msec time slots. Hence, momentary current surges of less than 50 msec are tolerated.

This is a sampled data system which requires an anti-aliasing filter, provided by the filter capacitor.

The delta-sigma modulator converts the sensed current to the digital domain. This allows digital filtering, and provides immunity to current and noise spikes. This type of filtering would be difficult or impossible to accomplish on an IC with analog components.

When ordering, the user has to specify whether the part is being used for low-side or high-side sense. The user also needs to specify the full scale value. See the Ordering Information table for details.

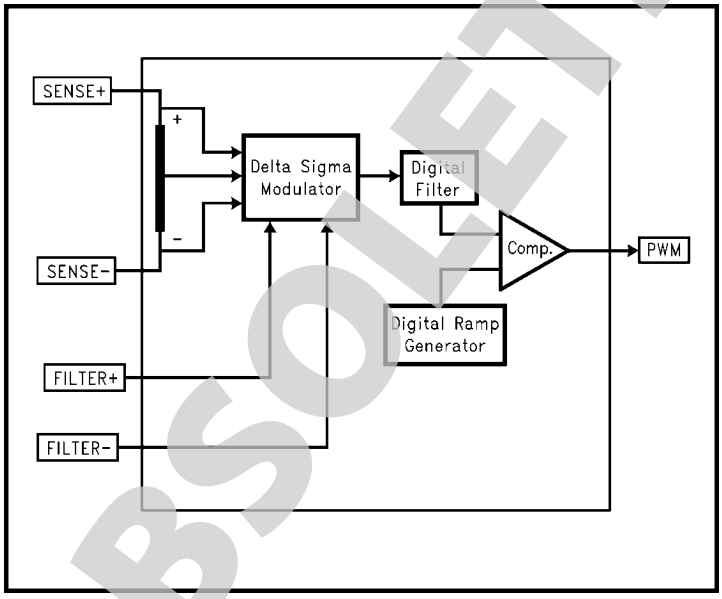

10012210

FIGURE 6. Functional block diagram of LM3812 and LM3813

OBSOLETE

100122 Version 13 Revision 3 Print Date/Time: 2011/09/22 15:32:17

PWM Output and Current Accuracy

OFFSET

The PWM output is quantized to 1024 levels. Therefore, the duty cycle can change only in increments of 1/1024.

There is a one-half (0.5) quantization cycle delay in the output of the PWM circuitry. That is to say that instead of a duty cycle of N/1024, the duty cycle actually is (N+½)/1024.

The quantization error can be corrected for if a more precise result is desired. To correct for this error, simply subtract 1/2048 from the measured duty cycle.

The extra half cycle delay will show up as a DC offset of ½ bit if it is not corrected for. This is approximately 1.1 mA for 1 Amp parts, and 11 mA for 7 Amp parts.

JITTER

In addition to quantization, the duty cycle will contain some jitter. The jitter is quite small (for example, the standard deviation of jitter is only 0.1% for the LM3812/13-1.0). Statistically the jitter can cause an error in a current sample. Because the jitter is a random variable, the mean and standard deviation are used. The mean, or average value, of the jitter is zero. The standard deviation (0.1%) can be used to define the peak error caused from jitter.

The "crest factor" has often been used to define the maximum error caused by jitter. The crest factor defines a limit within which 99.7% of the samples fall. The crest factor is defined as ±0.3% error in the duty cycle.

Since the jitter is a random variable, averaging multiple outputs will reduce the effective jitter. Obeying statistical laws, the jitter is reduced by the square root of the number of readings that are averaged. For example, if four readings of the duty cycle are averaged, the resulting jitter (and crest factor) are reduced by a factor of two.

JITTER AND NOISE

Jitter in the PWM output appears as noise in the current measurement. The Electrical Characteristics show noise measured in current RMS (root mean square). Arbitrarily one could specify PWM jitter, as opposed to noise. In either case the effect results in a random error in an individual current measurement.

Noise, just like jitter, can be reduced by averaging many readings. The RMS value of the noise corresponds to one standard deviation. The "crest factor" can be calculated in terms of current, and is equal to ±3 sigma (RMS value of the noise).

Noise will also be reduced by averaging multiple readings, and follows the statistical laws of a random variable.

ACCURACY OF 7A VERSIONS

The graph of *Figure 7* shows two possible responses to a 7A current step. The flat response shows basically a 7A level with some noise. This is what is possible with a good thick trace and a good thermal connection to the IC on the sense pins.

The second trace that asymptotically approaches a higher value shows what can happen under extremely poor thermal conditions. Here a very small wire connects the IC to the current source. The very small wire does not allow heat in the sense resistor to dissipate. Hence, as the sense resistor heats up, a temperature difference between the sense element and the die gets larger, and an error develops. Eventually the temperature difference reaches steady state, which accounts for the under-damped exponential response.

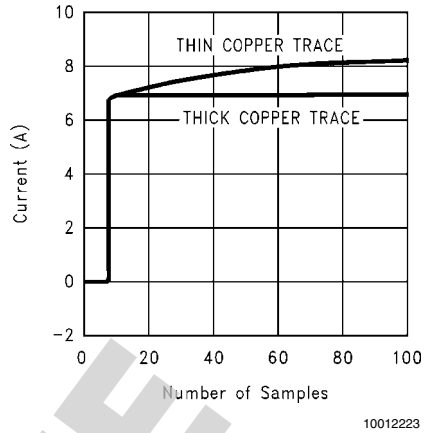

FIGURE 7. Transient Response to 7 Amp Step Current

ACCURACY VERSUS NOISE

The graph shown in *Figure 8* illustrates the typical response of ±1 Ampere current gauges. In this graph, the horizontal axis indicates time, and the vertical axis indicates measured current (the PWM duty cycle has been converted to current). The graph was generated for an actual current of 500 mA.

The difference between successive readings manifests itself as jitter in the PWM output or noise in the current measurement (when duty cycle of the PWM output is converted to current).

The accuracy of the measurement depends on the noise in the current waveform. The accuracy can be improved by averaging several outputs. Although there is variation in successive readings, a very accurate measurement can be obtained by averaging the readings. For example, on averaging the readings shown in this example, the average current measurement is 502.3 mA (*Figure 8*). This value is very close to the actual value of 500 mA. Moreover, the accuracy depends on the number of readings that are averaged.

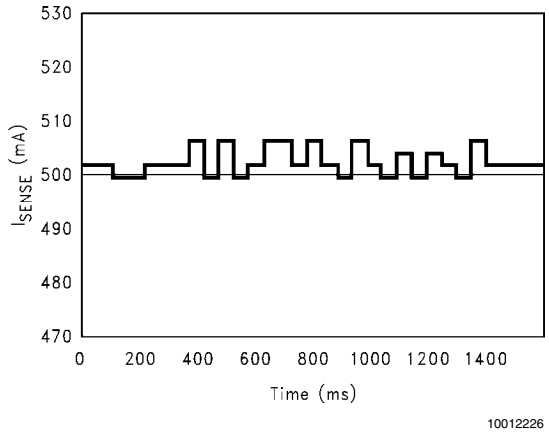

FIGURE 8. Typical Response of LM3812-1.0/LM3813-1.0

OBSOLETE

100122 Version 13 Revision 3 Print Date/Time: 2011/09/22 15:32:17

Look-Up Tables

The following tables show how to convert the duty cycle of the PWM output to a current value, and vice versa. The quantization error of ½ bit is not shown in these tables. Please see the "PWM Output and Current Accuracy" section for more details.

TABLE 1. Current to Duty Cycle Conversion Table

Sense Current (Amps)*	Duty Cycle (%)		Sense Current (Amps)*	Duty Cycle (%)
1.00	95.5		-1.00	4.5
0.95	93.2		-0.95	6.8
0.90	90.9		-0.90	9.1
0.85	88.6		-0.85	11.4
0.80	86.4		-0.80	13.6
0.75	84.1		-0.75	15.9
0.70	81.8		-0.70	18.2
0.65	79.5		-0.65	20.5
0.60	77.3		-0.60	22.7
0.55	75.0		-0.55	25.0
0.50	72.7		-0.50	27.3
0.45	70.5		-0.45	29.5
0.40	68.2		-0.40	31.8
0.35	65.9		-0.35	34.1
0.30	63.6		-0.30	36.4
0.25	61.4		-0.25	38.6
0.20	59.1		-0.20	40.9
0.15	56.8		-0.15	43.2
0.10	54.5		-0.10	45.5
0.05	52.3		-0.05	47.7
0.00	50.0		-0.00	50.0

*Maximum Sense Current = 1.0 Amps for LM3812-1.0 and LM3813-1.0.
The sense current should be multiplied by 10 for LM3812-7.0 and LM3813-7.0.

OBSOLETE

100122 Version 13 Revision 3 Print Date/Time: 2011/09/22 15:32:17

TABLE 2. Duty Cycle to Current Conversion Table

Duty Cycle (%)	Sense Current (Amps)		Duty Cycle (%)	Sense Current (Amps)
95.5	0.990		50.0	-0.000
92.5	0.935		47.5	-0.055
90.0	0.880		45.0	-0.110
87.5	0.825		42.5	-0.165
85.0	0.770		40.0	-0.220
82.5	0.715		37.5	-0.275
80.0	0.660		35.0	-0.330
77.5	0.605		32.5	-0.385
75.0	0.550		30.0	-0.440
72.5	0.495		27.5	-0.495
70.0	0.440		25.0	-0.550
67.5	0.385		22.5	-0.605
65.0	0.330		20.0	-0.660
62.5	0.275		17.5	-0.715
60.0	0.220		15.0	-0.770
57.5	0.165		12.5	-0.825
55.0	0.110		10.0	-0.880
52.5	0.055		7.5	-0.935
50.0	0.000		5.0	-0.990

*Maximum Sense Current = 1.0 Amps for LM3812-1.0 and LM3813-1.0.
The sense current should be multiplied by 10 for LM3812-7.0 and LM3813-7.0.

OBSOLETE

Timing Diagram

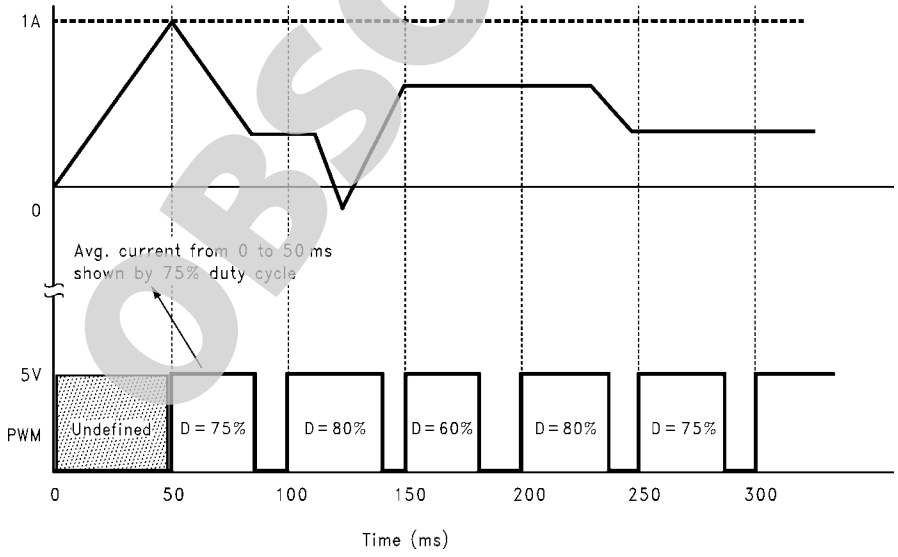

10012211

Duty cycle of the PWM waveform during any sampling interval indicates the current magnitude (average) and direction during the previous sampling interval.

FIGURE 9. Typical Timing Diagram for Mostly Positive Current

100122 Version 13 Revision 3 Print Date/Time: 2011/09/22 15:32:17

Physical Dimensions inches (millimeters) unless otherwise noted

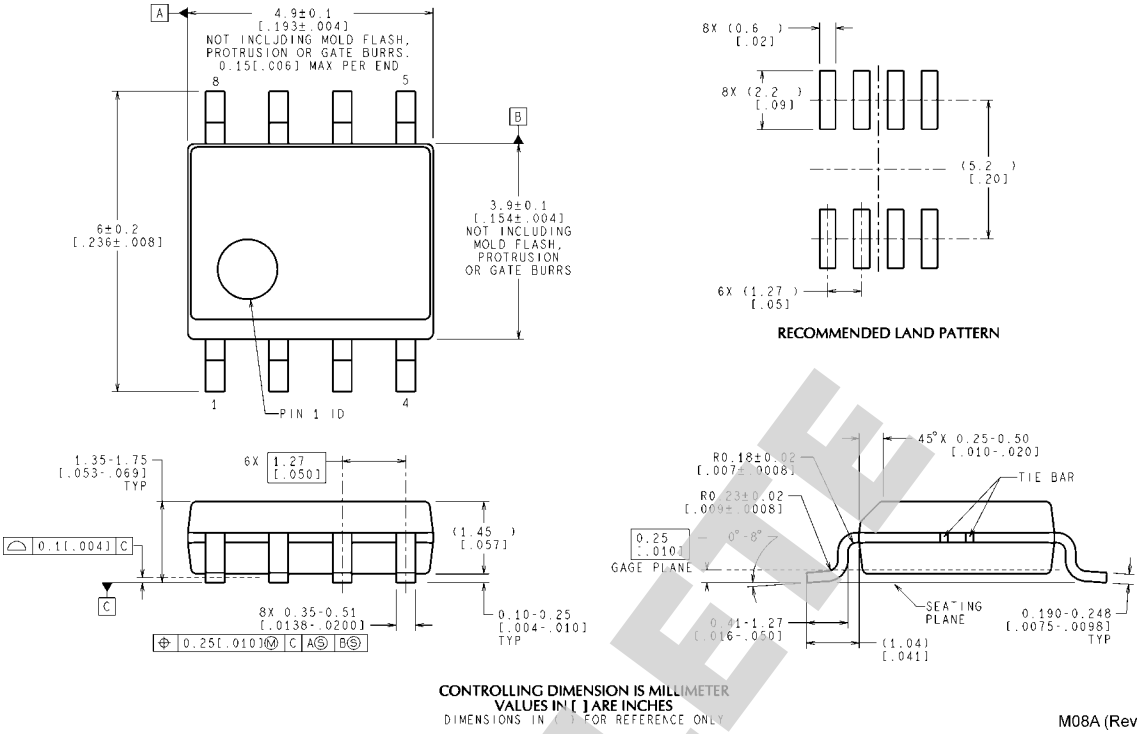

8-lead (0.150" Wide) Molded Small Outline Package
See Ordering Information table for Order Numbers
NS Package Number M08A

OBSOLETE

100122 Version 13 Revision 3 Print Date/Time: 2011/09/22 15:32:17

Notes

For more National Semiconductor product information and proven design tools, visit the following Web sites at:
www.national.com

Products		Design Support	
Amplifiers	www.national.com/amplifiers	WEBENCH® Tools	www.national.com/webench
Audio	www.national.com/audio	App Notes	www.national.com/appnotes
Clock and Timing	www.national.com/timing	Reference Designs	www.national.com/refdesigns
Data Converters	www.national.com/adc	Samples	www.national.com/samples
Interface	www.national.com/interface	Eval Boards	www.national.com/evalboards
LVDS	www.national.com/lvds	Packaging	www.national.com/packaging
Power Management	www.national.com/power	Green Compliance	www.national.com/quality/green
Switching Regulators	www.national.com/switchers	Distributors	www.national.com/contacts
LDOs	www.national.com/ldo	Quality and Reliability	www.national.com/quality
LED Lighting	www.national.com/led	Feedback/Support	www.national.com/feedback
Voltage References	www.national.com/vref	Design Made Easy	www.national.com/easy
PowerWise® Solutions	www.national.com/powerwise	Applications & Markets	www.national.com/solutions
Serial Digital Interface (SDI)	www.national.com/sdi	Mil/Aero	www.national.com/milaero
Temperature Sensors	www.national.com/tempsensors	SolarMagic™	www.national.com/solarmagic
PLL/VCO	www.national.com/wireless	PowerWise® Design University	www.national.com/training

THE CONTENTS OF THIS DOCUMENT ARE PROVIDED IN CONNECTION WITH NATIONAL SEMICONDUCTOR CORPORATION ("NATIONAL") PRODUCTS. NATIONAL MAKES NO REPRESENTATIONS OR WARRANTIES WITH RESPECT TO THE ACCURACY OR COMPLETENESS OF THE CONTENTS OF THIS PUBLICATION AND RESERVES THE RIGHT TO MAKE CHANGES TO SPECIFICATIONS AND PRODUCT DESCRIPTIONS AT ANY TIME WITHOUT NOTICE. NO LICENSE, WHETHER EXPRESS, IMPLIED, ARISING BY ESTOPPEL OR OTHERWISE, TO ANY INTELLECTUAL PROPERTY RIGHTS IS GRANTED BY THIS DOCUMENT.

TESTING AND OTHER QUALITY CONTROLS ARE USED TO THE EXTENT NATIONAL DEEMS NECESSARY TO SUPPORT NATIONAL'S PRODUCT WARRANTY. EXCEPT WHERE MANDATED BY GOVERNMENT REQUIREMENTS, TESTING OF ALL PARAMETERS OF EACH PRODUCT IS NOT NECESSARILY PERFORMED. NATIONAL ASSUMES NO LIABILITY FOR APPLICATIONS ASSISTANCE OR BUYER PRODUCT DESIGN. BUYERS ARE RESPONSIBLE FOR THEIR PRODUCTS AND APPLICATIONS USING NATIONAL COMPONENTS. PRIOR TO USING OR DISTRIBUTING ANY PRODUCTS THAT INCLUDE NATIONAL COMPONENTS, BUYERS SHOULD PROVIDE ADEQUATE DESIGN, TESTING AND OPERATING SAFEGUARDS.

EXCEPT AS PROVIDED IN NATIONAL'S TERMS AND CONDITIONS OF SALE FOR SUCH PRODUCTS, NATIONAL ASSUMES NO LIABILITY WHATSOEVER, AND NATIONAL DISCLAIMS ANY EXPRESS OR IMPLIED WARRANTY RELATING TO THE SALE AND/OR USE OF NATIONAL PRODUCTS INCLUDING LIABILITY OR WARRANTIES RELATING TO FITNESS FOR A PARTICULAR PURPOSE, MERCHANTABILITY, OR INFRINGEMENT OF ANY PATENT, COPYRIGHT OR OTHER INTELLECTUAL PROPERTY RIGHT.

LIFE SUPPORT POLICY

NATIONAL'S PRODUCTS ARE NOT AUTHORIZED FOR USE AS CRITICAL COMPONENTS IN LIFE SUPPORT DEVICES OR SYSTEMS WITHOUT THE EXPRESS PRIOR WRITTEN APPROVAL OF THE CHIEF EXECUTIVE OFFICER AND GENERAL COUNSEL OF NATIONAL SEMICONDUCTOR CORPORATION. As used herein:

Life support devices or systems are devices which (a) are intended for surgical implant into the body, or (b) support or sustain life and whose failure to perform when properly used in accordance with instructions for use provided in the labeling can be reasonably expected to result in a significant injury to the user. A critical component is any component in a life support device or system whose failure to perform can be reasonably expected to cause the failure of the life support device or system or to affect its safety or effectiveness.

National Semiconductor and the National Semiconductor logo are registered trademarks of National Semiconductor Corporation. All other brand or product names may be trademarks or registered trademarks of their respective holders.

Copyright© 2011 National Semiconductor Corporation

For the most current product information visit us at www.national.com

www.national.com

National Semiconductor Americas Technical Support Center
Email: support@nsc.com
Tel: 1-800-272-9959

National Semiconductor Europe Technical Support Center
Email: europe.support@nsc.com

National Semiconductor Asia Pacific Technical Support Center
Email: ap.support@nsc.com

National Semiconductor Japan Technical Support Center
Email: jpn.feedback@nsc.com

100122 Version 13 Revision 3 Print Date/Time: 2011/09/22 15:32:17

OBSOLETE