ROTARY TRANSDUCER – Model 357

PRODUCT SHEET

Single Turn Rotary Transducer

FEATURES

- Customized options including special electrical angles, mechanical packaging and custom functions
- Very flexible product for existing users and design-in
- Product can be offered with add-ons, such as cables to simplify fitting
- Complete solution reduces OEMs' supplier bases

APPLICATIONS

- Medical, Marine, Industrial applications for angular position sensing

The data sheet for model 357 is available on our web site at www.vishay.com/doc?57059

7/8” (22mm) Conductive Plastic Potentiometer

Note: The color of this product is changing to blue, during the internal period you may recieve either black or blue.

FEATURES

- 7/8” Diameter Single Turn
- Compact Size, Advanced Design Technology
- Offers a Cost Effective Solution to your Potentiometer Requirements

ELECTRICAL SPECIFICATIONS

PARAMETER		
Resistance	Standard range, 1KΩ to 50KΩ	
Tolerance	**STANDARD** ± 20%	**SPECIAL TO** ± 10%
Linearity (Independent)	**STANDARD** ± 2.0%	
Output Smoothness	0.1% maximum	
TCR	± 600ppm/°C maximum	
Power Rating	1.0 watt at 70°C Derate to 0 watt at 125°C	
Electrical Travel	340° ± 3°	
End Voltage	0.5% maximum	
Dielectric Withstanding Voltage	1,000V_{RMS}, 60Hz	
Insulation Resistance	1000MΩ, 500VDC	

MECHANICAL SPECIFICATIONS

PARAMETER	
Rotation	360° continuous (optional mechanical stops 340° ± 3°)
Mounting	3/8 - 32 UNEF - 2A
Operating Torque Maximum	Starting and running 3.68mNm (0.5 oz - in)
Shaft Tolerance Maximum Runout End Play Radial Play	 0.13mm (0.05 in) 0.25mm (0.010 in) 0.13mm (0.005 in)
Weight	17.5gms (0.62 oz)

ORDERING INFORMATION

357	0	3	0 P 22	XXX
MODEL	FEATURES	RT & INDEPENDENT LINEARITY	SHAFT TYPE	STANDARD VALUES Ω

0 Non turn pin & continuous rotation
1 No non turn pin & continuous rotation
2 Non turn pin, with stops on rotation
3 No non turn pin with stops on rotation

0 = 20% Rt Tol., 2%
1 = 20% Rt Tol., 1%
2 = 10% Rt Tol., 2%
3 = 10% Rt Tol., 1%

Shaft diameter - **0** = 6.0 mm or **1** = 6.35 (1/4”)
Shaft type - P = plain S = slotted
FMF (from Mounting face)
Range from 12mm to 75mm in 1mm increments

RES CODE	VALUE
102	1K
202	2K
502	5K
103	10K
203	20K
503	50K

Example: **357 - 0 - 1 - 0P22 - XXX**

Revision 18-Sep-03

DIMENSIONS in millimeters

Ø 6.35mm SHAFT VERSION

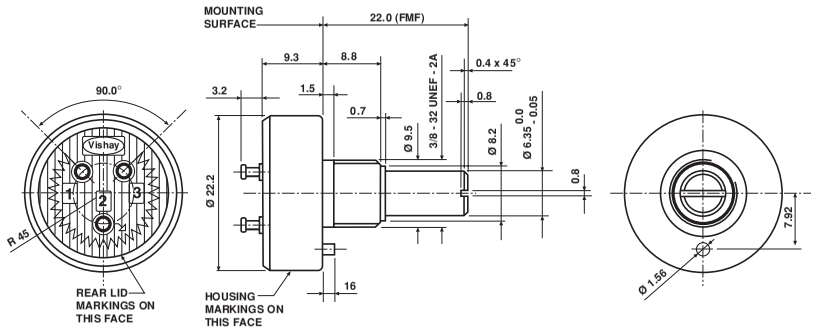

Ø 6.0mm SHAFT VARIATION

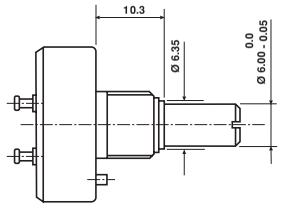

SCHEMATIC

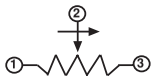

TOLERANCES: LINEAR ± 0.50
ANGULAR ± 2°

ENVIRONMENTAL SPECIFICATIONS

Vibration	15g, 10 to 2,000Hz
Shock	50g
Load Life	1000 hours
Storgage Temperature Range	- 55°C to + 125 °C
Rotational Life (Electrical)	5,000,000 Shaft Revolutions
Materials: Housing: Bushing: Rear Lid: Shaft: Terminals:	 Thermoplastic Housing Brass, nickel plated Alumina Stainless steel Turret type, solder plated
Bushing Mount Hardware Lockwasher Internal Tooth: Panel Nut:	 Steel, nickel plated Brass, nickel plated

MARKING

Unit Identification	Manufacturer’s name and model number, resistance value and tolerance, linearity specification date code and terminal identification

RESISTANCE VALUES

Ohms	1K, 2K, 5K, 10K, 20K, 50K