MICRO-EPSILON

Laser Triangulation Displacement Sensors

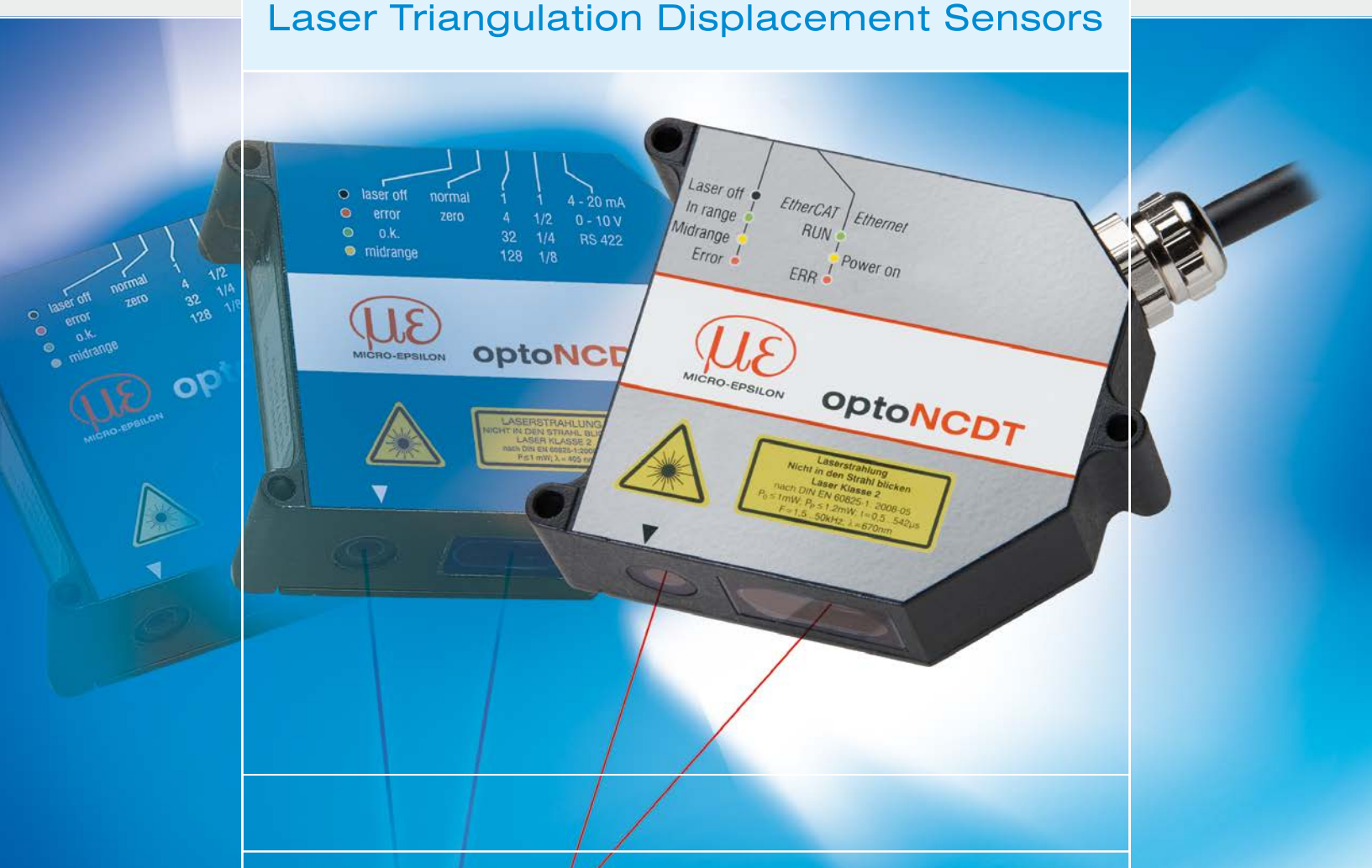

- Non-contact
- Wear free
- Large stand off
- Tiny measuring spot for small targets
- High speed
- Precision measurement
- Any target

A laser diode forms a spot on the surface of the target. The diffusely reflected light is projected back onto an imaging array via a precision receiving optical system. If the distance between the target and the laser sensor changes, the angle at which the light spot is observed also changes, resulting in a different position on the receiving imaging device. The position sensitive measuring element used for the series optoNCDT 16x7 is a PSD element, for all the other sensor models of the optoNCDT series a digital imaging device is utilized.

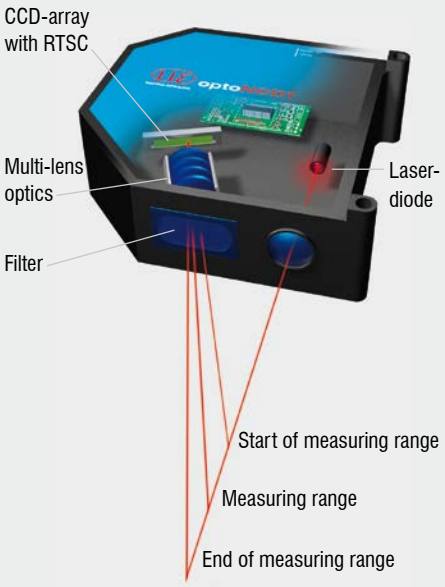

The series optoNCDT are world wide recognized as precision laser optical displacement and position sensors.
Laser optical displacement sensors measure from various distances to the target with a tiny beam spot, which enables measurements against the smallest parts. Due to the large stand off, measurements against critical surfaces such as hot surfaces are possible.
The non-contact principle allows complete wear free precision measurement. Since there is no physical contact with the target, neither the measurement nor the specimen are effected by the reading. The laser triangulation principle is ideal for any high speed measurement task which requires extremely high accuracy and resolution.

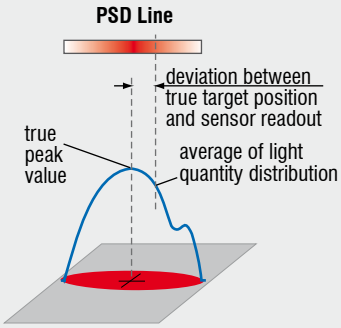

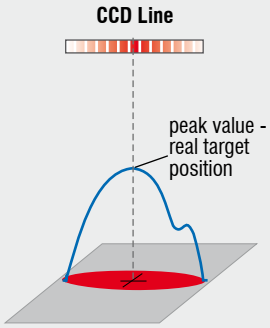

IEC - Standard

optoNCDT sensors uses a semiconductor laser with a wavelength of 670nm (visible/red). The maximum optical output power is 1mW. The sensor is classified as laser class II. A warning sign is attached to the sensor housing.

GENERAL INFORMATION

page 4-7

optoNCDT Laser triangulation sensors

Advantages and special features
Typical applications

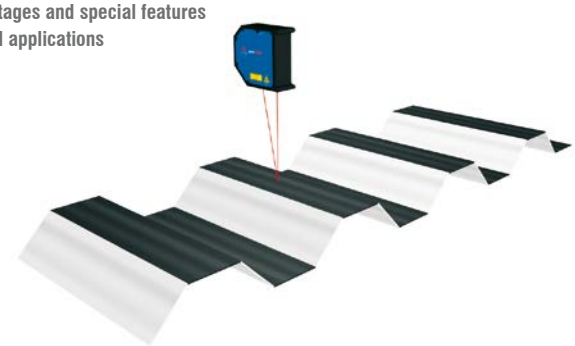

COMPACT & LOW COST

page 8-15

Series 1302 / 1402 / 1402SC

Ranges 5 - 600mm
Resolution from 1μm
For small spaces

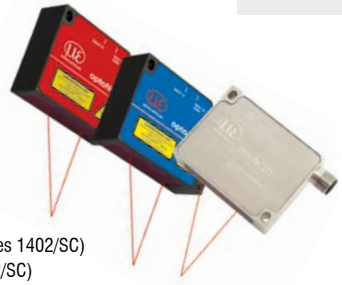

- CMOS sensor element
- Output analog / digital
- Integral controller
- Auto Target Compensation (ATC)
- Trigger input and teach in
- DAQ and configuration software (series 1402/SC)
- Performance certificate (series 1402/SC)
- High flex cables rated for moving cable tracks
- Robot rated cable
- Adjustable measuring rate (series 1402/SC)
- Version 1402SC with stainless steel housing

INDUSTRY STANDARD

page 16-17

Series 1700

Ranges 2 - 750mm
Resolution from 0.025μm
No external controller

- CCD sensor element
- Output analog / digital
- Integral controller
- Auto Target Compensation (ATC)
- Real-Time-Surface-Compensation (RTSC)
- Adjustable filter functions
- Performance certificate
- High flex cables rated for moving cable tracks

MOST PRECISE SENSORS

page 18-19

Series 2300

Ranges 2 - 200mm
Resolution from 0.03μm
Unmatched accuracy

- New improved CCD
- New improved optics
- Integral controller
- Advanced-Real-Time-Surface-Compensation (ARTSC)
- Advanced signal processing (filters, stats, trigger, synch...)
- New Ethernet, EtherCAT and RS422 interface
- Embedded set up browser
- Various ranges, blue and LL anti speckle option

ANTI SPECKLE SENSORS

page 20-23

Series 1700LL / 2300LL

Ranges 2 - 50 mm
LL option for metallic
or rough surfaces

- Technical data see series 1700/2300
- LL models with small Laser Line averages across shiny metallic or structured surfaces

LARGE STAND OFF

page 24-27

Series 1710-50 / 2210 / 1710-1000

Ranges 10 - 1,000mm
Resolution from 0.125μm
Large stand off

- CCD sensor element
- Output analog / digital
- Auto Target Compensation (ATC)
- Real-Time-Surface-Compensation (RTSC)
- Adjustable filter functions
- DAQ and configuration software
- Performance certificate
- High flex cables rated for moving cable tracks
- 1710-1000 with measuring range up to 1,000mm

BLUE LASER TECHNOLOGY

page 28-29

Series 1700BL

Ranges 20 - 1,000mm
Resolution from 1.5 μm
Suitable for red glowing metals, silicon
and organic matters

- Blue Laser technology
- Output analog / digital
- Integral controller
- Real-Time-Surface-Compensation (RTSC)
- Adjustable filter functions
- Performance certificate l
- High flex cables for dragchain or robot use
- Adjustable measuring rate

HIGH SPEED PSD SENSORS

page 30-31

Series 1610/1630

Ranges 0.5 - 200mm
Resolution from 0.02μm
Up to 100kHz true analog frequency response

- PSD sensor element
- Output analog / digital
- Performance certificate
- Very compact sensor
- High flex cables rated for moving cable tracks

Advantages and special features

Well designed for industrial applications

The sensors of the product group optoNCDT are especially well designed for industrial applications. Due to their robust design and technical features precise measurement results are guaranteed, even under the most difficult conditions.

Analog and digital outputs

The sensors optoNCDT offers various analog output signals as well as digital interfaces for the best and cleanest signal transfer. These intelligent sensors use high speed digital serial interfaces to communicate with a PC or a PLC for configuration and measurement. Multiple digital I/Os supply additional control features.

Compact design with integral controller

All ranges of the optoNCDT 1302, 1402, 1700, 1700LL and 2300 series have a completely integrated controller. There is no separate controller box, offering easy installation and wiring with no risk of mismatching of the sensor heads. Its small and compact size allows the sensor to be integrated into tight installation spaces.

High flex cable rating

All available cables for the optoNCDT sensors are high flex rated for moving cable tracks. For the use of the sensors on robotic arms, cables of the series 1302, 1402, 1700, 1700LL and 2300 are offered with a specific torsional robotic rating.

Leading in laser displacement measurement

Laser triangulation sensors from Micro-Epsilon have a successful history. As the pioneer in the area of CCD-sensors, Micro-Epsilon has set the benchmark with their laser triangulation sensors in the sophisticated field of measurement. The series optoNCDT offers multiple range models in five different performance classes, each representing the industry standard.

Certified quality: Calibration certificate

To document the performance of optoNCDT sensors, each sensor is calibrated before delivery and supplied with its own calibration protocol. These documents are included with the delivery and are proof of the excellent performance of each individual unit, traceable by its serial number.

World-wide unique: Real-Time Surface Compensation (RTSC)

With RTSC, a world-wide unique innovation, the degree of reflection from the target is compensated during the on-going exposure in real-time. The exposure time or the amount of light produced by the laser is optimally matched to the currently running exposure cycle. Only sensors from Micro-Epsilon are equipped with this innovative real-time control and consequently they always achieve optimum results even with changing surfaces.

Standard commercially available laser triangulation sensors operate with a time-shift control which is additive to the measurement cycles already concluded. In this case the degree of reflection from the last measurement is used to derive the degree of reflection for the next measurement. With changing or structured surfaces the measurement results therefore deviate noticeably from the actual measurement quantity, whereas the optoNCDT is controlled in real time at the respective optimum operating point. A true measurement reading is consistently output without any loss or delay, regardless of the surface quality at the true sensor data rate.

[available for series 1710-50 and 2210, all 1700 series]

Comparison: optoNCDT with RTSC and conventional sensor

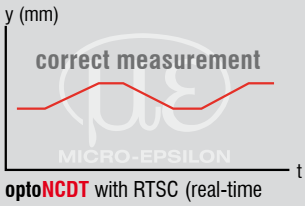

optoNCDT with RTSC (real-time surface compensation)

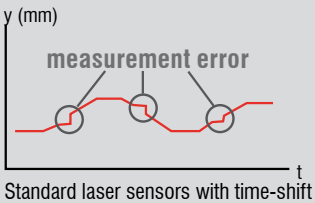

Standard laser sensors with time-shift control give distinctly incorrect signals with changing targets.

Laser head orientation

When mounting the laser head, consider possible shadowing of the reflected light.

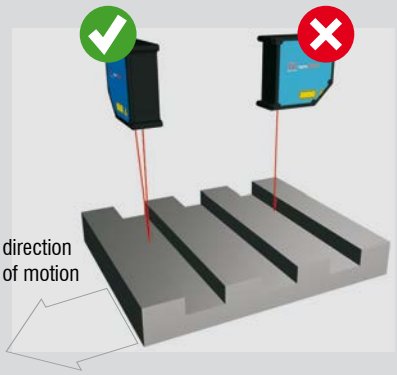

Measuring with multiple sensors

For many applications it is necessary to measure with several sensors either absolutely synchronous or alternating for interference issues. The optoNCDT series supports both features, a true synchronous measurement and an alternating operation as well.

Synchronization of two sensors

In order to obtain accurate results for a thickness or differential measurement while the target is moving or oscillating the absolute simultaneous measurement of the two sensors is necessary. The optoNCDT series supports this feature where one sensor is programmed to be the master, providing the trigger for the other slave unit. Consequently, the actual measurements are always time synchronous and therefore supply an exact measurement. [available for series 1710-50 and 2210, all 1700 series]

Synchronization for a thickness measurement with two opposing sensors

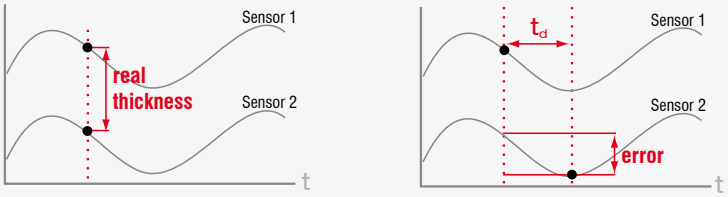

optoNCDT with simultaneous synchronization

Unsynchronized sensors will provide a false reading

IF2008 Interface Card for synchronous data acquisition

The IF2008 Interface Card is designed for the data acquisition of up to eight sensors (6x digital, 2x analog) and two encoder. This enables the simultaneous evaluation of multiple signals. Here, the sensors can be located opposite one another, e.g. for thickness measurement, or mounted in one plane, e.g. for differential height measurement. The interface card reads out the data from all the connected devices simultaneously and passes them to an external PC for further processing.

Whereas the simultaneous measurement method is intended for opaque targets, alternating synchronisation, which prevents possible interference, can be set up for transparent objects.

[technical data on page 34]

CSP 2008: Controller for up to six sensors

The CSP2008 controller can be used to process between two and six digital or analog input signals (2 x internal plus 4 x external via EtherCAT modules from Beckhoff of almost all Micro-Epsilon displacement sensors. EtherCAT can also be used as an external interface for connecting further sensors and I/O modules. The controller has a high luminance display so that measured values can be easily read, even from a long distance.

[technical data on page 35]

Adjustable filter functions

To achieve the best measurement results in every application, three different filter functions can be activated inside the optoNCDT processor. The recursive mean works similar to an analog low-pass filter. The moving average enables a high dynamic response and general noise reduction. The median filter is especially suitable for surfaces with random erratic false readings. All filter settings do not effect the true output frequency (data rate) of the analog and digital outputs.

[available for series 1402, 1710-50 and 2210, all 1700 series]

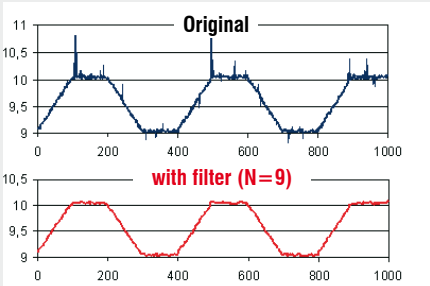

Profile measurement with median filter

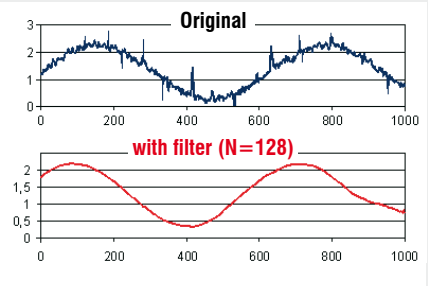

Vibration measurement with moving average

Customized sensor

Micro-Epsilon always considers customized modifications of existing models to adapt to special applications.

Even entire custom design changes are possible to fully satisfy the customer's special OEM requirements e.g:

- special cable/connector configurations
- customized stand off or ranges
- improved specifications (vibration, shock...)
- custom firmware

High speed measurement

For fast measurements the optoNCDT sensors offer a high speed real time data rate up to 49 kHz. For the fastest applications, e.g vibration analysis, the special analog series optoNCDT 16x7 is available with a 37 kHz analog frequency response (equivalent to 300 kHz digital data rate).

DAQ and setup software

The optoNCDT series can be completely configured with ease via the setup software. The basic configuration is also possible via the touch keys. The entire SDK and software required for the optoNCDT series can be downloaded for free!

www.me-sensor.com

[available for series 1302, all 1402 series, 1710-50 and 2210, all 1700 series]

CSP 2008: Signal processing unit

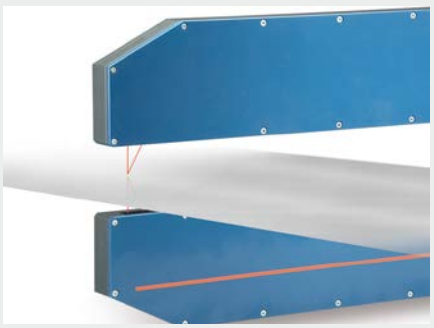

Thickness measurement with two sensors

optoNCDT 1700: The industry standard among the laser triangulation sensors

The series optoNCDT 1700 is the leading sensor in its class, in respect to price, performance and functionality.
Key features of the optoNCDT 1700:

Specular Model - For direct reflecting targets (glass and mirror)

optoNCDT 1700DR are special sensors for optical distance measurement of direct reflecting materials. Three sensors are designed specifically for use with direct reflecting targets like glass or mirror. The high measuring rate of 2.5kHz and the maximum resolution of 0.1μm make precise measurement of the desired targets possible. The reflected laser beam is guided into the receiving array by tilting the sensor and is then directly converted into an electrical signal by the integrated controller. The design is identical to the successful optoNCDT 1700 standard series.
As well as the integrated controller, the series also incorporates a foil keypad directly on the sensor, whereby adjustments without configuration software are possible. A different tilt angle is necessary for each sensor depending on the measuring range. Therefore, mounting stencils for easy alignment of the sensors to the target are included as standard.

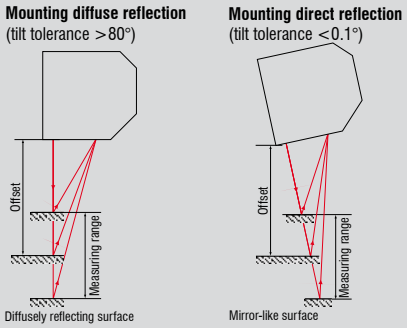

Programmable limits

The optoNCDT 1700 sensors can be programmed with an upper and lower limit. This allows an independent monitoring of a precise tolerance for a part. The two limits are programmable via software and include an adjustable hysteresis for each limit.

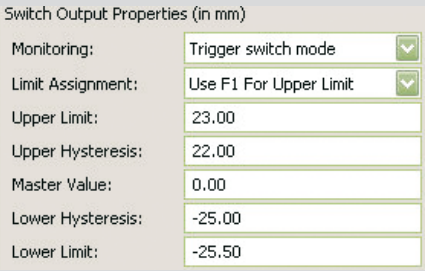

Programmable exposure time/measurement rate

For targets with little diffuse reflectivity (transparent or very shiny) the exposure time can be adjusted. The programmed measurement cycle remains constant, providing still the real time capability.

Adjustable exposure time/ measurement rate series 1700				
Measuring rate	2.5kHz	1.25kHz	625Hz	312.5Hz
Max. exposure time	0.4ms	0.8ms	1.6ms	3.2ms

Event capturing

Time critical events are captured with the external trigger input. A trigger box is available for wide trigger input levels. The measurement and data stream is completely controlled via an external signal. [Specifications on page 29]

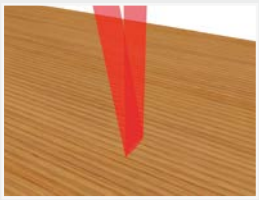

optoNCDT LL series - Anti speckle sensor

Interferences in the laser spotlight are caused by the surface roughness of an object. These interferences in the sub-micron range occur especially in case of objects with a metallic lustre. This physical effect makes it often difficult to carry out measurements on metallic surfaces.
The new LaserLine series avoids this effect. Special lenses expand the laser point to a short oval line. By using a special algorithm, the measurement is averaged across the length of this line. The LL series averages the surface property for a precise and stable distance signal on structured and rough target.
The interferences occurring on metallic surfaces are effectively filtered. That way the distance to the metal can be exactly determined.
The new function is made possible with three sensor arrays. The optoNCDT 1700LL operates with an integrated controller and is also highly practical for use on the robot. No special alignment for the LL sensor head is required.

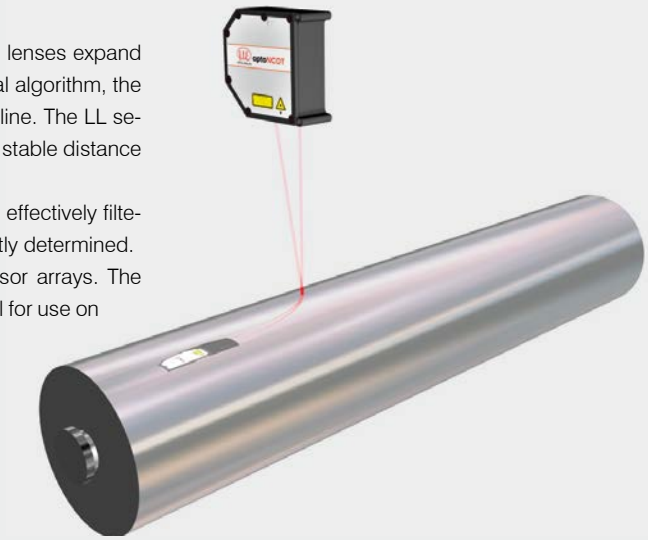

Dimensional measurement
In wood processing machines optoNCDT sensors are used for validating the proper dimensions of the products.

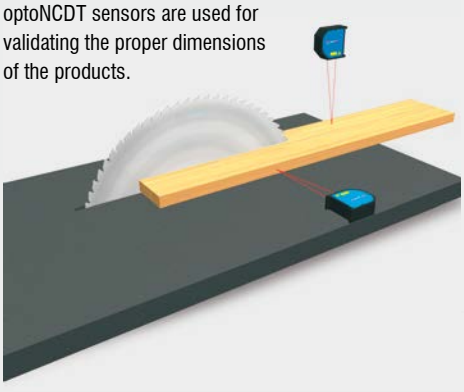

Ride height measurement
In road tests pitching and rolling movements, spring compression during braking and other dimensions are measured with the optoNCDT sensor. These sensors are particularly suitable due to the compact and robust design and the possibility of supplying the sensor from the vehicle onboard power supply. For these type of applications special models are available with improved shock, vibration and ambient light specifications.

Parts measurement
On machined surfaces the optoNCDT is used for quality assurance. Dimensions such as roundness, concentricity, eccentricity, bending and deflection are determined.

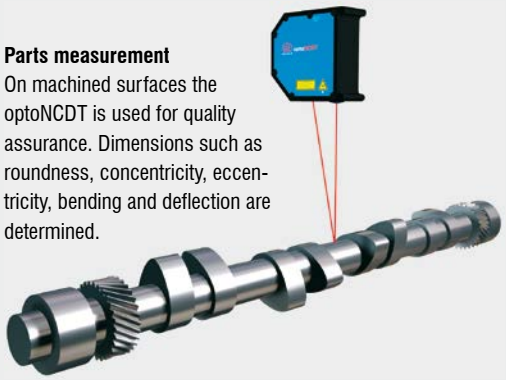

Deflection
Black rubber, an extremely difficult material to read off, is already measured directly after the calender with optoNCDT sensors. The sensors guarantee a flawless production of the rubber web.

Shape conformance on cast or formed parts
After casting, aluminum wheels are measured for a variety of features, e.g. hub depth, roundness, bulging, etc., before further processing.

Flatness measurement (Coplanarity)
To achieve the best quality during board assembly, all IC pins must be aligned in one plane. In modern automatic placement systems the ICs are therefore measured directly before placement. The tiny light spot diameters enable the measurement of the finest pin geometries.

Part positioning in production lines
In automated processing stages for vehicles or other goods, a precise measurement of the position relative to the processing tool is necessary (drilling, punching, fitting sub-assemblies). Sensors with real-time surface compensation are particularly suitable for the high precision acquisition of highly shiny and varying surfaces.

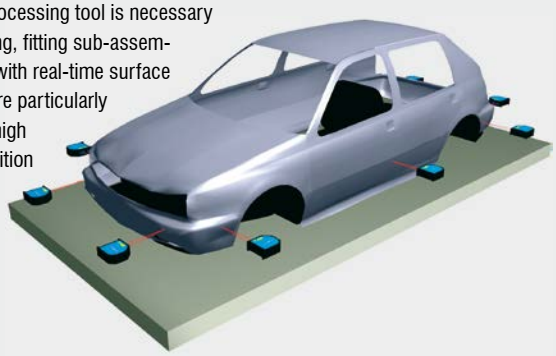

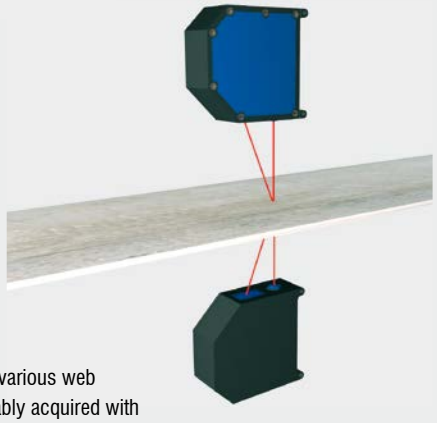

Synchronous thickness measurement
The thickness of the various web materials can be reliably acquired with the optoNCDT sensors. With their high measuring rate and the possibility of synchronizing two or more sensors (simultaneous measurement), the sensors are ideal for moving and oscillating targets.

Low cost CMOS sensor
True measurement at minimum expense

- Four models with measuring ranges from 20mm to 200mm
- Ideal for OEM applications
- Compact design with integrated controller
- Measuring rate up to 750Hz
- Analog (U/I) and digital output
- Trigger input and teach-in
- High flex cables for drag chain or robot use
- Configuration via software www.micro-epsilon.com/download
- Auto Target Compensation

optoNCDT 1302

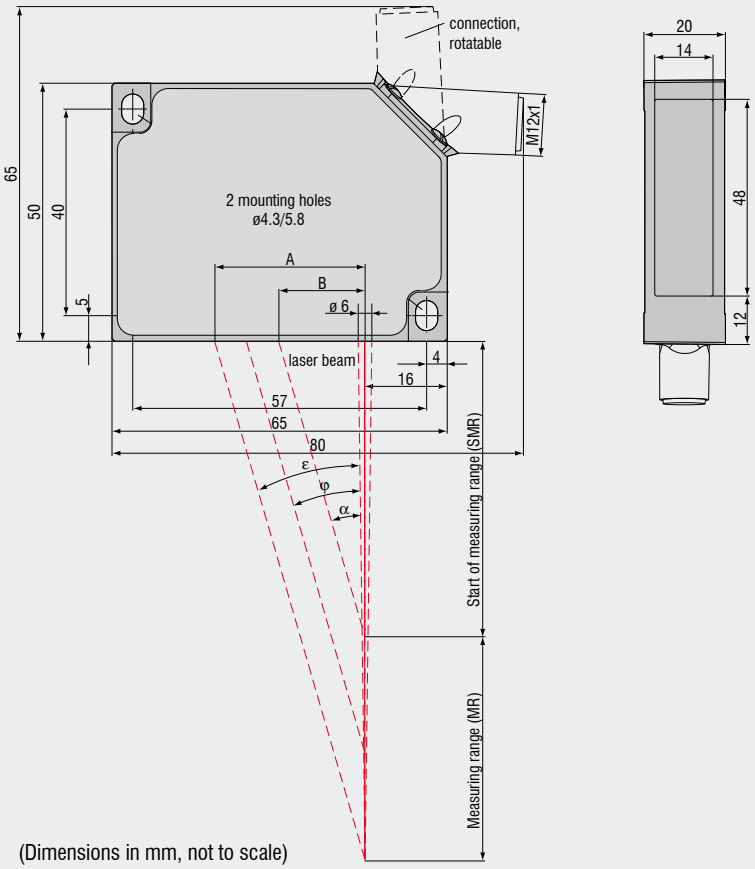

MR	SMR	α	φ	ε	A	B
20	30.0	31.2	27.9	25.8	24.2	18.2
50	45.0	25.1	19.6	16.9	28.9	21.1
100	50.0	23.1	14.4	11.3	30.1	21.3
200	60.0	20.1	9.4	6.8	30.8	22.0

(Dimensions in mm, not to scale)

Model		ILD 1302-20	ILD 1302-50	ILD 1302-100	ILD 1302-200
Measuring range		20mm	50mm	100mm	200mm
Start of measuring range	SMR	30mm	45mm	50mm	60mm
Midrange	MR	40mm	70mm	100mm	160mm
End of measuring range	EMR	50mm	95mm	150mm	260mm
Linearity		40µm	100µm	200µm	400µm
		±0.2 % FSO			
Resolution	averaged with factor 64	4µm	10µm	20µm	40µm
		0.02 % FSO			
	dynamic 750Hz	10µm	25µm	50µm	100µm
		0.05 % FSO			
	digital	12bit			
Measuring rate		750Hz			
Light source		semiconductor laser <1mW, 670nm (red)			
Laser safety class		class 2 IEC 60825-1 : 2008-05			
Spot diameter	SMR	210µm	1100µm	1400µm	2300µm
	MR	530µm	110µm	130µm	2200µm
	EMR	830µm	1100µm	1400µm	2100µm
Protection class		IP 67			
Vibration		15g / 10Hz…1kHz			
Shock		15g / 6ms (IEC 68-2-29)			
Weight (without cable)		approx. 83g			
Operating temperature		0…+50°C			
Storage temperature		-20...+70°C			
Output	analog	4...20mA (1...5V with cable PC 1402-3/U)			
	digital	RS422 (12bit)			
Control I/O		1x open collector output (switching output, switch, error); 1x input (teach in, trigger); 1x laser on/off			
Power supply		11...30VDC, 24VDC / 50mA			
Controller		integrated signal processor			
Electromagnetic compatibility (EMC)		EN 61326-1:2006 / EN 55011 Class B (Interface emission) EN 61326-1:2006 / EN 61000-4-2:1995 + A1:1998 + A2:2001 (Interference resistance)			

FSO = Full scale output All specifications apply for a diffusely reflecting matt white ceramic target
SMR = Start of measuring range; MR = Midrange; EMR = End of measuring range

Connector axial

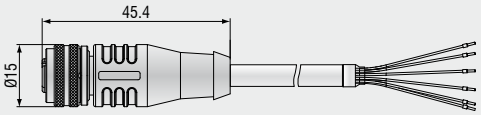

Front view male sensor connector

Pin	Description		color PC1402-x/I
3	RS422 Rx+	serial input	green
4	RS422 Rx-		yellow
5	RS422 Tx+	serial output	grey
6	RS422 Tx-		pink
7	$+U_B$	11-30VDC type 24V	red
8	Laser on/off	switch input	black
9	Teach in		violet
10	Error	switch output	brown
11	I_{OUT}	4 ... 20mA	white
12	GND	supply and signal ground	blue
1/2	n.c.		

The cable screen is connected with the sensor housing. The interface and power supply cable are robot rated and UL certfied. At one end there is a 12pin M12 connector, the other end is open.

Economic CMOS sensor
Best price / performance value

- Nine models with measuring ranges from 5mm to 600mm
- Compact design with integrated controller
- Adjustable measuring rate up to 1.5kHz
- Analog (U/I) and digital output
- Trigger input and teach-in
- Adjustable filter functions Peak selection (firmware)
- High flex cables for drag chain or robot use
- Calibration certificate included
- Configuration via software www.micro-epsilon.com/download
- Auto Target Compensation

optoNCDT 1402

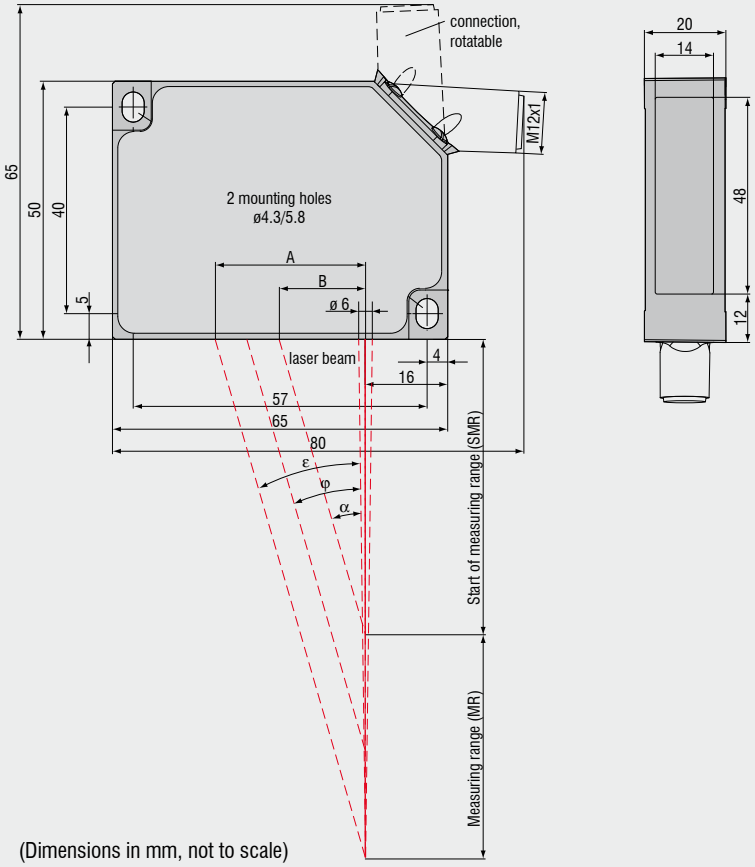

(Dimensions in mm, not to scale)

MR	SMR	α	φ	ε	A	B
5	20.0	33.5	35.5	37.1	18.9	13.2
10	20.0	33.5	32.9	32.4	19.1	13.2
20	30.0	31.2	27.9	25.8	24.2	18.2
50	45.0	25.1	19.6	16.9	28.9	21.1
100	50.0	23.1	14.4	11.3	30.1	21.3
200	60.0	20.1	9.4	6.8	30.8	22.0
250VT	100.0	14.7	7.6	5.5	33.9	26.2
600	200.0	9.7	4.3	3	41.6	33.7

Model		ILD 1402-5	ILD 1402-10	ILD 1402-20	ILD 1402-50	ILD 1402-100	ILD 1402-200	ILD 1402-250VT	ILD 1402-400	ILD 1402-600
Measuring range		5mm	10mm	20mm	50mm	100mm	200mm	250mm	400mm	600mm
Start of measuring range		20mm	20mm	30mm	45mm	50mm	60mm	100mm	200mm	200mm
Midrange		22.5mm	25mm	40mm	70mm	100mm	160mm	225mm	400mm	500mm
End of measuring range		25mm	30mm	50mm	95mm	150mm	260mm	350mm	600mm	800mm
Linearity [1]		5...9µm	5...18µm	7...36µm	12...90µm	20...180µm	40...360µm	50...1200µm	120...2000µm	120...3000µm
		≤0.18% FSO						≤0.5% FSO		
Resolution [2]	with averaging factor 64	0.6µm	1µm	2µm	5µm	10µm	13µm	32µm	80µm	80µm
		≤0.01% FSO								
	dynamic 1.5 kHz	≤0.02% FSO						≤0.02...0.12% FSO		
	digital	14bit								
Measuring rate, programmable		1.5kHz; 1kHz; 750Hz; 375Hz; 50Hz								
Light source		semiconductor laser <1mW, 670nm (red)								
Laser safety class		class 2 IEC 60825-1 : 2008-05								
Spot diameter	SMR	110µm	110µm	210µm	1100µm	1400µm	2300µm	5000µm	2.6 x 5mm	2.6 x 5mm
	MMR	380µm	650µm	530µm	110µm	130µm	2200µm	5000µm	2.6 x 5mm	2.6 x 5mm
	EMR	650µm	1200µm	830µm	1100µm	1400µm	2100µm	5000µm	2.6 x 5mm	2.6 x 5mm
Protection class		IP 67								
Vibration		15g / 10Hz … 1kHz						20g / 10Hz…1kHz	15g / 10Hz…1kHz	
Shock		15g / 6ms (IEC 68-2-29)								
Weight (without cable)		appr. 83g						appr. 130g		
Operation temperature		0 …+50°C								
Storage temperature		-20 ... +70°C								
Measurement output	analog	4 ... 20mA (1 ... 5V with cable PC 1402-x/U); free scalable within the nominal range								
	digital	RS422 / 14bit								
Control I/O		1x open collector output (switching output, switch, error); 1x input (teach in, trigger); 1x laser on/off								
Supply		11 ... 30VDC, 24VDC / 50mA								
Controller		integrated signal processor								
Software		free setup and aquisition tool + SDK (software development kit)								
Electromagnetic compatibility (EMC)		EN 61326-1:2006 / EN 55011 Class B (Interface emission) EN 61326-1:2006 / EN 61000-4-2:1995 + A1:1998 + A2:2001 (Interference resistance)								

FSO = Full scale output All specifications apply for a diffusely reflecting matt white ceramic target
[1] values apply for 0 - 30% FSO and 30 - 100 % FSO [2] resolution digital output 14bit
SMR = Start of measuring range MMR = Midrange EMR = End of measuring range

Connector axial

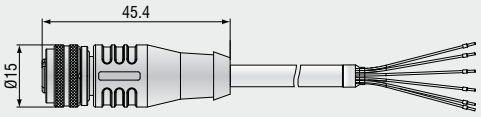

Front view male sensor connector

Pin	Description		color PC1402-x/I
3	RS422 Rx+	serial input	green
4	RS422 Rx-		yellow
5	RS422 Tx+	serial output	grey
6	RS422 Tx-		pink
7	$+U_B$	11-30DV 24V MP	red
8	Laser off	switch input	black
9	Teach in		violet
10	Error	switch output	brown
11	I_{OUT}	4 ... 20mA	white
12	GND	supply and signal ground	blue
1/2	n.c.		

The cable screen is connected with the sensor housing. The interface and power supply cable are robot rated and UL certfied. At one end there is a 12pin M12 connector, the other end is open.

Economic CMOS sensor with analog out and RS232
Compatible with ILD1401

- Compatible with optoNCDT 1401
- Eight models with measuring ranges from 5mm to 600mm
- Adjustable measuring rate up to 1.5kHz
- Analog (U/I) and digital output
- Trigger input and teach-in
- Adjustable filter functions Peak selection (firmware)
- High flex cables for drag chain or robot use
- Calibration certificate included
- Configuration via software www.micro-epsilon.com/download
- Auto Target Compensation

optoNCDT 1402(025)

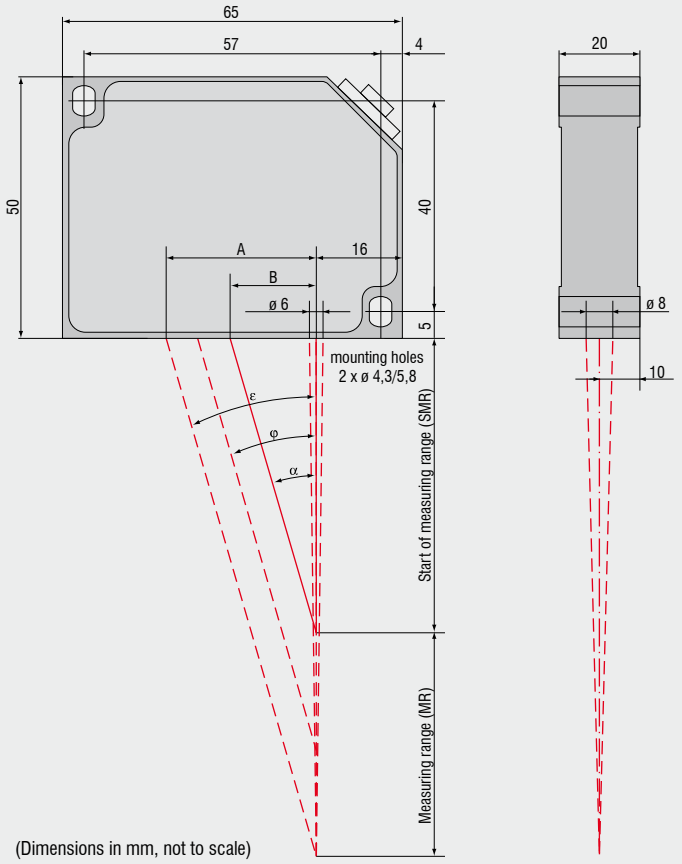

(Dimensions in mm, not to scale)

MR	SMR	α	φ	ε	A	B
5	20.0	33.5	35.5	37.1	18.9	13.2
10	20.0	33.5	32.9	32.4	19.1	13.2
20	30.0	31.2	27.9	25.8	24.2	18.2
50	45.0	25.1	19.6	16.9	28.9	21.1
100	50.0	23.1	14.4	11.3	30.1	21.3
200	60.0	20.1	9.4	6.8	30.8	22.0
400	200.0	9.7	5.3	3.8	41.4	33.7
600	200.0	9.7	4.3	3	41.6	33.7

Model		ILD1402-5(025)	ILD1402-10(025)	ILD1402-20(025)	ILD1402-50(025)	ILD1402-100(025) (025)	ILD1402-200(025)	ILD1402-400(025)	ILD1402-600(025)
Measuring range		5mm	10mm	20mm	50mm	100mm	200mm	400mm	600mm
Start of measuring range		20mm	20mm	30mm	45mm	50mm	60mm	200mm	200mm
Midrange		22.5mm	25mm	40mm	70mm	100mm	160mm	400mm	500mm
End of measuring range		25mm	30mm	50mm	95mm	150mm	260mm	600mm	800mm
Linearity [1]		5...9µm	5...18µm	7...36µm	12...90µm	20...180µm	40...360µm	120...1200µm	120...3000µm
		≤0.18% FSO						≤0.5% FSO	
Resolution [2]	with averaging factor 64	0.6µm	1µm	2µm	5µm	10µm	13µm	80µm	80µm
		≤0.01% FSO							
	dynamic 1.5 kHz	≤0.02% FSO						≤0.02...0.12% FSO	
	digital	14bit							
Measuring rate, programmable		1.5kHz; 1kHz; 750Hz; 375Hz; 50Hz							
Light source		semiconductor laser <1mW, 670nm (red)							
Laser safety class		class 2 IEC 60825-1 : 2008-05							
Spot diameter	SMR	110µm	110µm	210µm	1100µm	1400µm	2300µm	2.6 x 5mm	2.6 x 5mm
	MMR	380µm	650µm	530µm	110µm	130µm	2200µm	2.6 x 5mm	2.6 x 5mm
	EMR	650µm	1200µm	830µm	1100µm	1400µm	2100µm	2.6 x 5mm	2.6 x 5mm
Protection class		IP 67							
Vibration		15g / 10Hz … 1kHz							
Shock		15g / 6ms (IEC 68-2-29)							
Weight (without cable)		appr. 83g						appr. 130g	
Operation temperature		0 …+50°C							
Storage temperature		-20 ... +70°C							
Measurement output	analog	4 ... 20mA (1 ... 5V with cable PC 1401-3/U); free scalable within the nominal range							
	digital	RS232 / 14bit							
Control I/O		1x open collector output (switching output, switch, error); 1x input (teach in, trigger); 1x laser on/off							
Supply		11 ... 30VDC, 24VDC / 50mA							
Controller		integrated signal processor							
Software		free setup and aquisition tool + SDK (software development kit)							
Electromagnetic compatibility (EMC)		EN 61326-1:2006 / EN 55011 Class B (Interface emission) EN 61326-1:2006 / EN 61000-4-2:1995 + A1:1998 + A2:2001 (Interference resistance)							

FSO = Full scale output All specifications apply for a diffusely reflecting matt white ceramic target
[1] values apply for 0 - 30% FSO and 30 - 100 % FSO [2] resolution digital output 14bit
SMR = Start of measuring range MMR = Midrange EMR = End of measuring range

Connector axial (included)

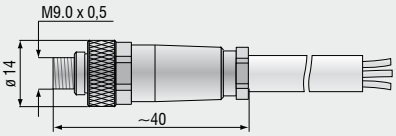

Front view male sensor connector

Pin connection current/RS232 7x1x0.14	
Pin	Description
1	Error
2	Laser on/off
3	RX232
4	TX232
5	4 ... 20 mA
6	GND
7	Supply 11 ... 30 VDC

Compact sensor with stainless steel housing IP69K

- Eight models with measuring ranges from 5mm to 600mm
- Food-grade stainless steel housing No dirt deposits possible
- Adjustable measuring rate up to 1.5kHz
- Analog (U/I) and digital output
- Trigger input
- Adjustable filter functions Peak selection (firmware)
- Telemetry qualified by low power consumption
- Protection class IP69K for harsh environments
- Configuration via software www.micro-epsilon.com/download
- Auto Target Compensation

optoNCDT 1402SC complies with food grade IP69K standard

- cycle of 30 seconds
- 14 - 16 liter per minute
- water 80°C at 100 bar
- food grade stainless steel housing

This sensor withstands pressure cleaning conditions on a plant floor. The sensor can be exposed to a water jet of 80 - 100 bar at a temperature of 80°C. The test was performed with a spray nozzle located at defined angles and at a distance of 12 - 18 cm from the sensor.

The high protection rating guarantees absolute resistance, even in applications subject to frequent agressive cleaning processes, e.g. in the food industry.

optoNCDT 1402SC

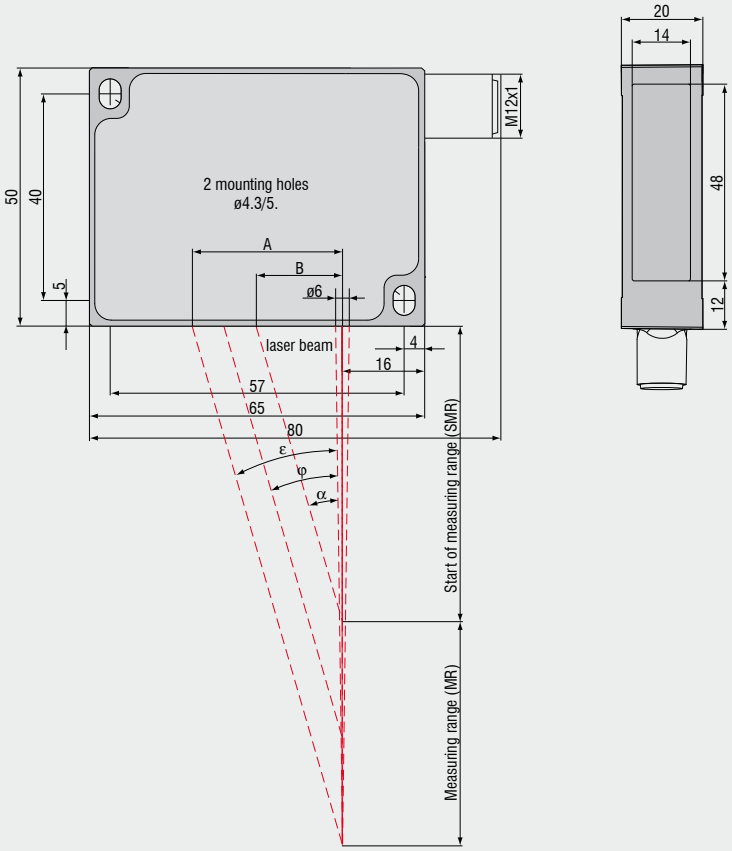

(Dimensions in mm, not to scale)

MR	SMR	α	φ	ε	A	B
5	20.0	33.5	35.5	37.1	18.9	13.2
10	20.0	33.5	32.9	32.4	19.1	13.2
20	30.0	31.2	27.9	25.8	24.2	18.2
50	45.0	25.1	19.6	16.9	28.9	21.1
100	50.0	23.1	14.4	11.3	30.1	21.3
200	60.0	20.1	9.4	6.8	30.8	22.0
250VT	100.0	14.7	7.6	5.5	33.9	26.2
600	200.0	9.7	4.3	3	41.6	33.7

Model		ILD 1402-5SC	ILD 1402-10SC	ILD 1402-20SC	ILD 1402-50SC	ILD 1402-100SC	ILD 1402-200SC	ILD 1402-250SC	ILD 1402-600SC
Measuring range		5mm	10mm	20mm	50mm	100mm	200mm	250mm	600mm
Start of measuring range		20mm	20mm	30mm	45mm	50mm	60mm	100mm	200mm
Midrange		22.5mm	25mm	40mm	70mm	100mm	160mm	225mm	500mm
End of measuring range		25mm	30mm	50mm	95mm	150mm	260mm	350mm	800mm
Linearity [1]		5...9µm	5...18µm	7...36µm	12...90µm	20...180µm	40...360µm	50...1200µm	120...3000µm
		≤0.18% FSO						≤0.5% FSO	
Resolution [2]	with averaging factor 64	0.6µm	1µm	2µm	5µm	10µm	13µm	32µm	80µm
		≤0.01% FSO							
	dynamic 1.5 kHz	≤0.02% FSO						≤0.02...0.12% FSO	
	digital	14bit							
Measuring rate, programmable		1.5kHz; 1kHz; 750Hz; 375Hz; 50Hz							
Light source		semiconductor laser <1mW, 670nm (red)							
Laser safety class		class 2 IEC 60825-1 : 2008-05							
Spot diameter	SMR	110µm	110µm	210µm	1100µm	1400µm	2300µm	5000µm	2.6 x 5mm
	MMR	380µm	650µm	530µm	110µm	130µm	2200µm	5000µm	2.6 x 5mm
	EMR	650µm	1200µm	830µm	1100µm	1400µm	2100µm	5000µm	2.6 x 5mm
Protection class		IP 69K							
Vibration		15g / 10Hz … 1kHz						20g / 10Hz…1kHz	
Shock		15g / 6ms (IEC 68-2-29)							
Weight (without cable)		appr. 173g							
Operation temperature		0 …+50°C							
Storage temperature		-20 ... +70°C							
Measurement output	analog	4 ... 20mA (1 ... 5V with cable PC 1402-x/U); free scalable within the nominal range							
	digital	RS422 / 14bit							
Control I/O		1x open collector output (switching output, switch, error); 1x input (trigger)							
Supply		11 ... 30VDC, 24VDC / 50mA							
Controller		integrated signal processor							
Software		free setup and aquisition tool + SDK (software development kit)							
Electromagnetic compatibility (EMC)		EN 61326-1:2006 / EN 55011 Class B (Interface emission) EN 61326-1:2006 / EN 61000-4-2:1995 + A1:1998 + A2:2001 (Interference resistance)							

FSO = Full scale output All specifications apply for a diffusely reflecting matt white ceramic target
[1] values apply for 0 - 30% FSO and 30 - 100 % FSO [2] resolution digital output 14bit
SMR = Start of measuring range MMR = Midrange EMR = End of measuring range

Connector axial

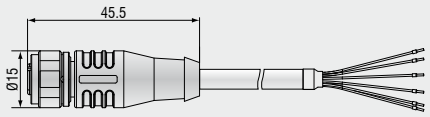

Front view male sensor connector

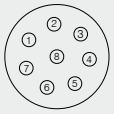

Pin	Description	color
1	I_{OUT}	white
2	Error	brown
3	RS422 Rx+	green
4	RS422 Rx–	yellow
5	RS422 Tx+	grey
6	RS422 Tx–	pink
7	GND	blue
8	$+U_B$	red
	Laser off	
	Teach in	

Industry standard
The benchmark in CCD laser triangulation

- Eleven models with measuring ranges from 2mm to 1000mm
- Compact design with integrated controller
- RTSC Real Time Surface Compensation
- Adjustable measuring rate up to 2.5kHz
- Analog (U/I) and digital output
- Adjustable filter functions (firmware)
- High flex cables for drag chain or robot use
- Calibration certificate included
- Configuration via software www.micro-epsilon.com/download

optoNCDT 1700 (2/10/20/50/100/200/250VT mm)

(Dimensions in mm, not to scale. All CAD files are available online.)

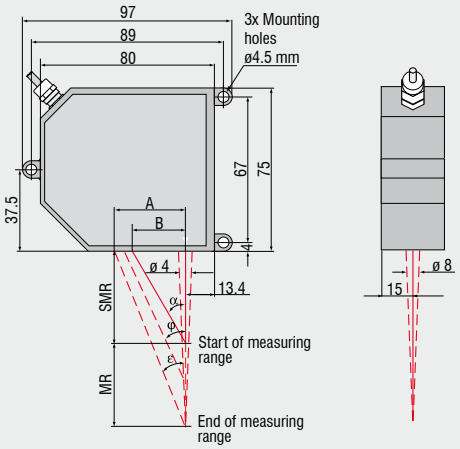

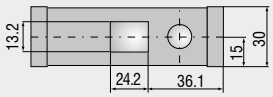

MR	SMR	α	φ	ε	A	B
2	24	35°	40°	44.8°	25.8	16.8
10	30	34.3°	35.2°	35.6°	28.7	20.5
20	40	28.8°	27.5°	26.7°	30.1	22.0
50	45	26.5°	23.0°	18.3°	31.5	22.5
100	70	19.0°	15.4°	10.9°	32.6	24.1
200	70	19.0°	9.78°	6.97°	33.1	24.1
250VT	70	19.0°	8.4°	6.0°	33.5	24.1
40	175	22.1°	21.9°	21.8°	101	86
500	200	19.3°	9.8°	7.0°	101	85
750	200	19.3°	7.7°	5.0°	101	85

optoNCDT 1700 (40/500/750 mm)

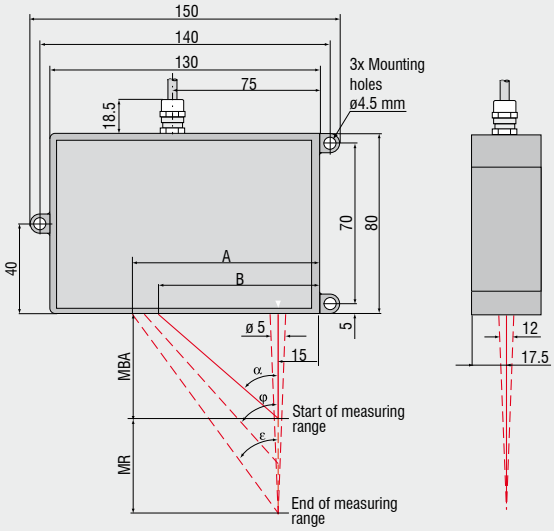

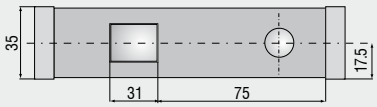

Connector (sensor side)
Article Number: 0323272

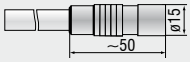

Connector (sensor cable)
Article Number: 0323243

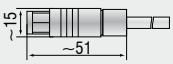

Model		ILD 1700-2	ILD 1700-10	ILD 1700-20	ILD 1700-40	ILD 1700-50	ILD 1700-100	ILD 1700-200	ILD 1700-250VT	ILD 1700-500	ILD 1700-750
Measuring range		2mm	10mm	20mm	40mm	50mm	100mm	200mm	250mm	500mm	750mm
Start of measuring range	SMR	24mm	30mm	40mm	175mm	45mm	70mm	70mm	70mm	200mm	200mm
Midrange	MMR	25mm	35mm	50mm	195mm	70mm	120mm	170mm	195mm	450mm	575mm
End of measuring range	EMR	26mm	40mm	60mm	215mm	95mm	170mm	270mm	320mm	700mm	950mm
Linearity		2µm	8µm	16µm	32µm	40µm	80µm	200µm	630µm	400µm	750µm
	FSO	≤0.1%	≤0.08%					≤0.1%	≤0.25%	≤0.08%	≤0.1%
Resolution	dynamic[1]	0.1µm	0.5µm	1.5µm	4µm	3µm	6µm	12µm	50µm	30µm	50µm
	static[2]	0.025µm	0.125µm	0.375µm	1µm	0.75µm	1.5µm	3µm	12.5µm	7.5µm	12.5µm
Measuring rate		2.5kHz / 1.25kHz / 625Hz / 312.5Hz (adjustable)									
Light source		semiconductor laser <1mW, 670nm (red)									
Permissable ambient light	at 2.5kHz	10,000lx							15,000lx	10,000lx	
Laser safety class		class 2 acc. DIN EN 60825-1 : 2008-05									
Spot diameter	SMR	80µm	110µm	320µm	230µm	570µm	740µm	1300µm	1500µm	1500µm	1500µm
	MMR	35µm	50µm	45µm	210µm	55µm	60µm	1300µm	1500µm	1500µm	1500µm
	EMR	80µm	110µm	320µm	230µm	570µm	700µm	1300µm	1500µm	1500µm	1500µm
Operation temperature		0 ...+50°C							0 ...+55°C	0 ...+50°C	
Storage temperature		-20 ... +70°C									
Output	measure-ments	selectable: 4 ... 20mA / 0 ... 10V / RS 422 / USB (optional with cable PC1700-3/USB)									
	switching outputs	1 x error or 2 x limit (each pogrammable)									
Switch Input		laser ON-OFF / zero									
Operation		via touch screen on sensor or via PC with ILD 1700 tool									
Power supply		24VDC (11 ... 30VDC), max. 150mA									
Electromagnetic compatibility (EMC)		EN 61000-6-3 EN 61000-6-2									
Sensor cable length (with connector)		0.25m (integrated cable with connector) option: 3m or 10m									
Synchronization		possible for simultaneous or alternating measurements									
Protection class		IP 65									
Vibration		2g / 20 ... 500Hz									
Shock		15g / 6ms									
Weight (with 0.25m cable)		~ 550g			~ 600g	~ 550g				~ 600g	

FSO = Full Scale Output All specifications apply for a diffusely reflecting white ceramic target
[1]at 2.5kHz without averaging [2]with averaging factor 128
SMR = Start of measuring range MMR = Midrange EMR = End of measuring range

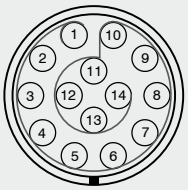

Solder-pin side
male cable connector,
insulator

Pin assignment

Pin-Nr.	Function	Cable colors PC1700-x	Cable colors PC1700-10/3/IF2004	Pin-Nr.	Function	Cable colors PC1700-x	Cable colors PC1700-10/3/IF2004
1	RS422 output (symmetric)	green	NC	8	Error or limit output	grey and pink	NC
2		brown		9	Laser on/off	red and blue	yellow
3	Symmetrical synchron output (Master) or input (Slave)	blue	green	10	Zero	white and green	NC
4		pink	grey	11	RS422 input (symmetric)	yellow	NC
5	Power supply (11 ... 30 VDC)	red	white	12		grey	
6	GND	black	brown	13	Analog output	Coaxial inner conductor, white	NC
7	Limit output	violet	NC	14	AGND	Coaxial screening	NC

Most advanced laser displacement sensor
High speed combined with extreme accuracy

- Six models with measuring ranges from 2 to 200mm
- Compact design with integrated controller
- Adjustable measuring rate up to 49.02kHz
- Ethernet / Ethercat / RS422
- Advanced Real Time Surface Compensation
- Calibration certificate included
- Dual measurement mode 2 in 1: diffuse and specular
- Thickness measurement built in
- Configuration via Web-Interface

optoNCDT 2300-2 ... 2300-100
Diffuse reflection

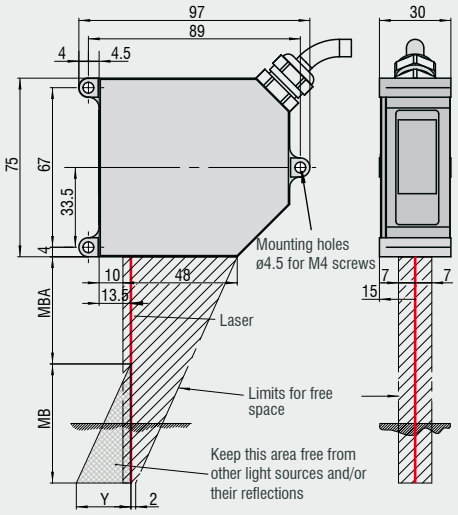

MR	SMR	Y
2	24	1.5
10	30	6.5
20	40	10.0
50	45	23.0
100	70	33.5

optoNCDT 2300-2 ... 2300-20
Direct reflection

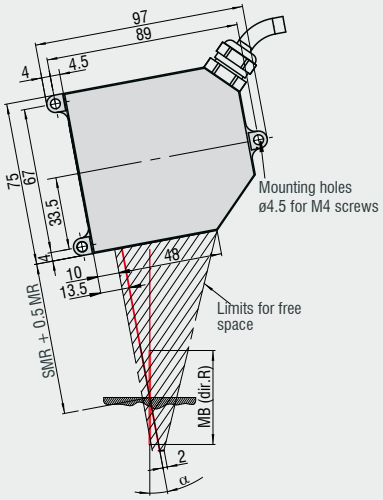

MR	SMR + 0.5 MR	α
2	25	20.5°
10	35	17.5°
20	50	13.8°

optoNCDT 2300-200

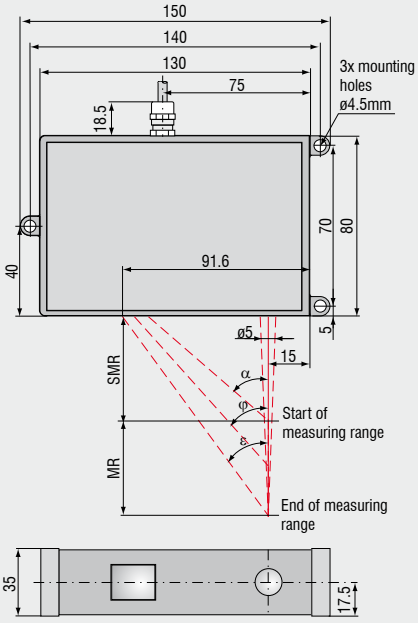

α	φ	ε
25.1°	16.7°	13.1°

Model		ILD 2300-2	ILD 2300-10	ILD 2300-20	ILD 2300-50	ILD 2300-100	ILD 2300-200
Measuring range [1]		2 (2) mm	10 (5) mm	20 (10) mm	50 (25) mm	100 (50) mm	200 (100) mm
Start of measuring range	SMR	24 (24) mm	30 (35) mm	40 (50) mm	45 (70) mm	70 (120) mm	130 (230) mm
Midrange	MMR	25 (25) mm	35 (37.5) mm	50 (55) mm	70 (82.5) mm	120 (145) mm	230 (280) mm
End of measuring range	EMR	26 (26) mm	40 (40) mm	60 (60) mm	95 (95) mm	170 (170) mm	330 (330) mm
Linearity		0.6µm	2µm	4µm	10µm	20µm	60µm
		≤0.03% FSO	≤0.02% FSO				≤0.03% FSO
Resolution (20 kHz)		0.03 µm	0.15µm	0.3µm	0.8µm	1.5µm	3µm
		0.0015% FSO					
Measuring rate		adjustable via software 49.02 / 30 / 20 / 10 / 5 / 2.5 / 1.5kHz (49.02kHz with reduced measuring range)					
Permissable ambient light		10,000…40,000lx					
Spot diameter	SMR	80µm	110µm	160µm	215µm	350µm	1300µm
	MMR	23 x 23µm	32 x 45µm	46 x 45µm	70 x 70µm	130µm	1300µm
	EMR	35 x 85µm	110 x 160µm	140 x 200µm	255 x 350µm	350µm	1300µm
Light source		semiconductor laser <1mW. 670nm (red) / class 2 IEC 60825-1 : 2008-05					
Protection class		IP 65					
Operation temperature		0 ... +50°C					
Storage temperature		-20 ... +70°C					
Inputs / Outputs		Ethernet / EtherCAT RS422 analog ouput via CSP2008					
Inputs		Laser on/off; synchronization/trigger input					
Power supply		24 Vdc (11…30V); PV < 3W					
LEDs		Status / Power / Ethernet / EtherCAT					
Sensor cable	Standard	0.25 m (with cable connector)					
	Option	3 / 6 / 9m with Sub D 15 pin connector					
Electromagnetic compatibility (EMC)		EN 61326-1: 2006-10 DIN EN 55011: 2007-11 (group 1. class B) EN 61 000-6-2: 2006-03					
Vibration		2g / 20 ... 500Hz					
Shock		15g / 6ms / 3 axes					

FSO = Full Scale Output All specifications apply for a diffusely reflecting matt white ceramic target
SMR = Start of measuring range MMR = Midrange EMR = End of measuring range
[1] Numbers in brackets refer to full measurement rate 49.02 kHz

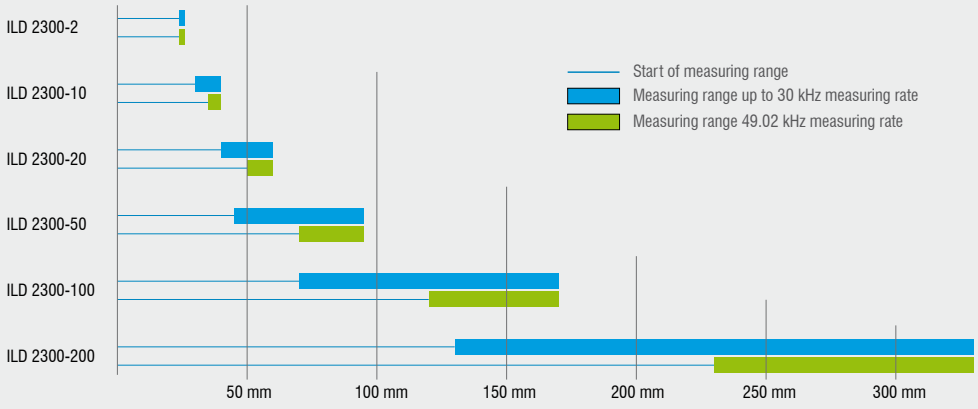

Anti speckle sensor
For metallic or rough surfaces

- Laser Line averages across shiny metallic or structured surfaces
- Four models with measuring ranges from 2mm to 50mm
- Compact design with integrated controller
- RTSC — Real Time Surface Compensation
- Adjustable measuring rate up to 2.5kHz
- Analog (U/I) and digital output
- Adjustable filter functions (firmware)
- High flex cables for drag chain or robot use
- Certified — Calibration certificate included
- //www. — Configuration via software www.micro-epsilon.com/download

optoNCDT 1700LL (2/10/20/50 mm)
(Dimensions in mm, not to scale. All CAD files are available online.)

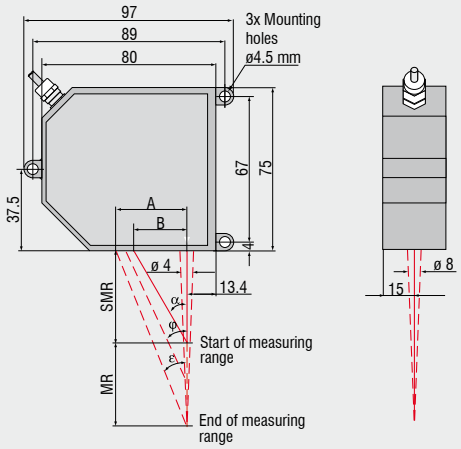

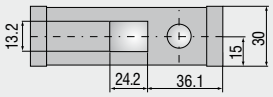

Connector (sensor side)
Article Number: 0323243

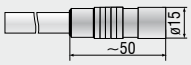

Connector (sensor cable)
Article Number: 0323272

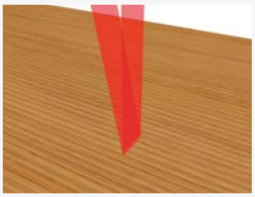

MR	SMR	α	φ	ε	A	B
2	24	35°	40°	44.8°	25.8	16.8
10	30	34.3°	35.2°	35.6°	28.7	20.5
20	40	28.8°	27.5°	26.7°	30.1	22.0
50	45	26.5°	23.0°	18.3°	31.5	22.5

Model		ILD1700-2LL	ILD 1700-10LL	ILD 1700-20LL	ILD 1700-50LL
Measuring range		2mm	10mm	20mm	50mm
Start of measuring range	SMR	24mm	30mm	40mm	45mm
Midrange	MMR	25mm	35mm	50mm	70mm
End of measuring range	EMR	26mm	40mm	60mm	95mm
Linearity		2µm	8µm	16µm	40µm
	FSO	≤0.1%	≤0.08%		
Resolution[1]	dynamic[2]	0.1µm	0.5µm	1.5µm	3µm
	static[3]	0.025µm	0.125µm	0.375µm	0.75µm
Measuring rate		2.5kHz / 1.25kHz / 625Hz / 312.5Hz (adjustable)			
Light source		semiconductor laser <1mW, 670nm (red)			
Permissable ambient light	at 2.5kHz	10,000lx			
Laser safety class		class 2 acc. DIN EN 60825-1 : 2008-05			
Spot diameter	SMR	85 x 240µm	120 x 405µm	185 x 485µm	350 x 320µm
	MMR	24 x 280µm	35 x 585µm	55 x 700µm	70 x 960µm
	EMR	64 x 400µm	125 x 835µm	195 x 1200µm	300 x 1940µm
Operation temperature		0 ...+50°C			
Storage temperature		-20 ... +70°C			
Output	measurements	selectable: 4 ... 20mA / 0 ... 10V / RS 422 / USB (optional with cable PC1700-3/USB)			
	switching outputs	1 x error or 2 x limit (each pogrammable)			
Switch Input		laser ON-OFF / zero			
Operation		via touch screen on sensor or via PC with ILD 1700 tool			
Power supply		24VDC (11 ... 30VDC), max. 150mA			
Electromagnetic compatibility (EMC)		EN 61000-6-3 EN 61000-6-2			
Sensor cable length (with connector)		0.25m (integrated cable with connector) option: 3m or 10m			
Synchronization		possible for simultaneous or alternating measurements			
Protection class		IP 65			
Vibration		2g / 20 ... 500Hz			
Shock		15g / 6ms			
Weight (with 0.25m cable)		~ 550g			

FSO = Full Scale Output All specifications apply for a diffusely reflecting white ceramic target
[1] for measurements against high glossy surfaces (targets), resolution depends on the material
[2] at 2.5kHz without averaging [3] with averaging factor 128
SMR = Start of measuring range MMR = Midrange EMR = End of measuring range

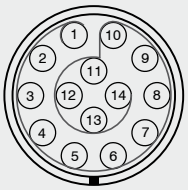

Solder-pin side
male cable connector,
insulator

Pin assignment

Pin-Nr.	Function	Cable colors PC1700-x	Cable colors PC1700-10/3/IF2004	Pin-Nr.	Function	Cable colors PC1700-x	Cable colors PC1700-10/3/IF2004
1	RS422 output (symmetric)	green	NC	8	Error or limit output	grey and pink	NC
2		brown		9	Laser on/off	red and blue	yellow
3	Symmetrical synchron output (Master) or input (Slave)	blue	green	10	Zero	white and green	NC
4		pink	grey	11	RS422 input (symmetric)	yellow	NC
5	Power supply (11 ... 30 VDC)	red	white	12		grey	
6	GND	black	brown	13	Analog output	Coaxial inner conductor, white	NC
7	Limit output	violet	NC	14	AGND	Coaxial screening	NC

Anti speckle sensor
For metallic for metallic shiny surfaces

- Laser Line averages across shiny metallic or structured surfaces
- Four models with measuring ranges from 2mm to 50mm
- Compact design with integrated controller
- Adjustable measuring rate up to 49.02kHz
- INTER FACE — Ethernet / EtherCAT / RS422
- A-RTSC — Advanced Real-Time-Surface-Compensation
- Certified — Calibration certificate included
- Configuration via Web-Interface

optoNCDT 2300LL
(Dimensions in mm, not to scale)

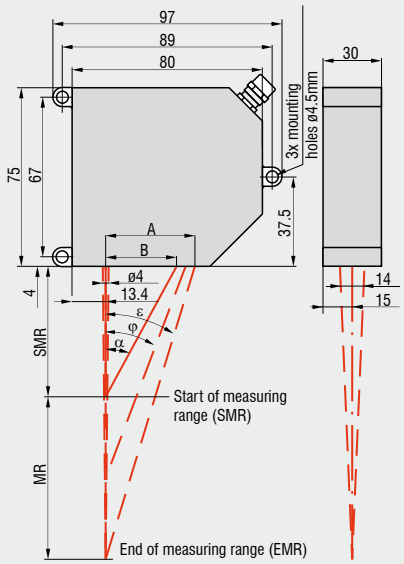

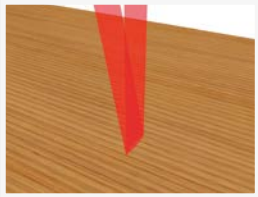

MR	SMR	MMR	EMR	α	φ	ε	A	B
2	24	25	26	35.0	41.3	47.5	28.5	16.7
10	30	35	40	31.7	35.2	38.2	31.6	18.4
20	40	50	60	26.4	27.7	28.6	32.9	19.8
50	45	70	95	25,.0	21.0	19.2	33.2	20.9

Model		ILD 2300-2LL	ILD 2300-10LL	ILD 2300-20LL	ILD 2300-50LL
Measuring range [1]		2 (2) mm	10 (5) mm	20 (10) mm	50 (25) mm
Start of measuring range	SMR	24 (24) mm	30 (35) mm	40 (50) mm	45 (70) mm
Midrange	MMR	25 (25) mm	35 (37.5) mm	50 (55) mm	70 (82.5) mm
End of measuring range	EMR	26 (26) mm	40 (40) mm	60 (60) mm	95 (95) mm
Linearity		0.6µm	2µm	4µm	10µm
		≤±0.03% FSO	≤±0.02% FSO		
Resolution (20kHz)		0.03µm	0.15µm	0.3µm	0.8µm
		0.0015% FSO			
Measuring rate		adjustable via software 49.02 / 30 / 20 / 10 / 5 / 2.5 / 1.5kHz (49.02kHz with reduced measuring range)			
Permissable ambient light		10,000…40,000lx			
Spot diameter	SMR	85 x 240µm	120 x 405µm	185 x 485µm	350 x 320µm
	MMR	24 x 280µm	35 x 585µm	55 x 700µm	70 x 960µm
	EMR	64 x 400µm	125 x 835µm	195 x 1200µm	300 x 1940µm
Light source		laser diode (670nm) class 2			
Protection class		IP 65			
Operation temperature		0 ... +50°C			
Storage temperature		-20 ... +70°C			
Inputs / Outputs		Ethernet / EtherCAT RS422 analog ouput via CSP2008			
Inputs		laser on/off; synchronization/trigger input			
Power supply		24Vdc (11…30V); PV < 3W			
LED		status / power / Ethernet / EtherCAT			
Sensor cable	standard	0.25m (with cable connector)			
	option	3 / 6 / 9m with Sub D 15 pin connector			
Electromagnetic compatibility (EMC)		EN 61326-1: 2006-10 DIN EN 55011: 2007-11 (group 1. class B) EN 61 000-6-2: 2006-03			
Vibration		2g / 20 ... 500Hz			
Shock		15g / 6ms / 3 axes			

FSO = Full Scale Output All specifications apply for a diffusely reflecting matt white ceramic target
SMR = Start of measuring range MMR = Midrange EMR = End of measuring range
[1] Numbers in brackets refer to full measurement rate 49.02kHz

Accu range sensor
Extreme accuracy with large stand off

- High accuracy and long standoff distances
- Three models with measuring ranges from 10mm to 50mm
- Measurement rate up to 10kHz
- RTSC Real Time Surface Compensation
- Analog and digital output
- Adjustable filter functions (firmware)
- Calibration certificate included
- Configuration via software www.micro-epsilon.com/download

optoNCDT 1710-50

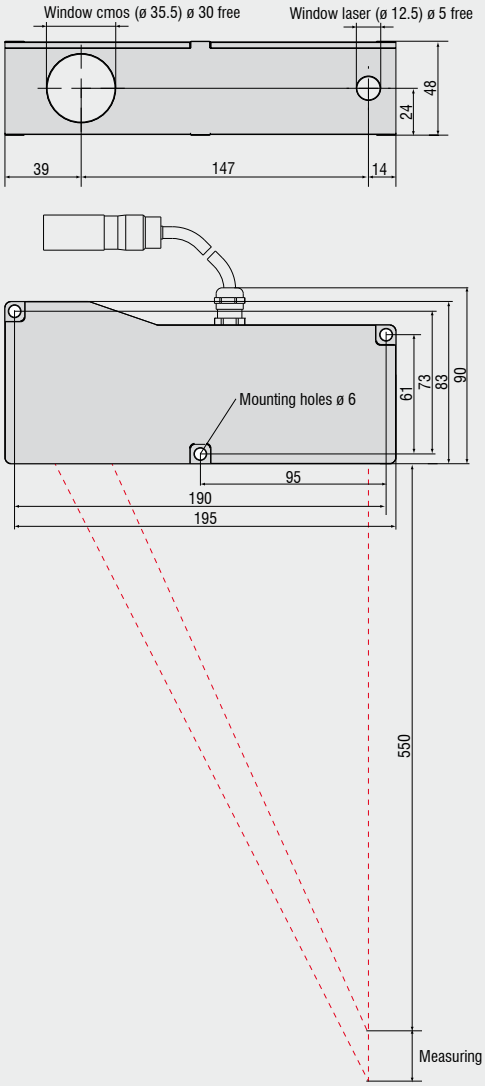

optoNCDT 2210

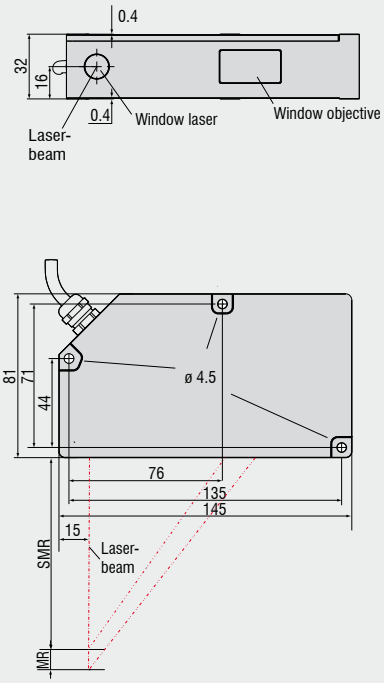

Dimensions in mm, not to scale.

Controller optoNCDT 2210

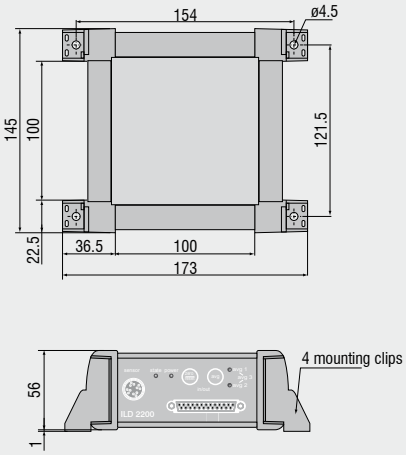

Model		ILD 1710-50	ILD 2210-10	ILD 2210-20
Measuring range		50mm	10mm	20mm
Start of measuring range	SMR	550mm	95mm	90mm
Midrange	MMR	575mm	100mm	
End of measuring range	EMR	600mm	105mm	110mm
Linearity		50µm	3µm	6µm
		≤0.1% FSO	≤0.03% FSO	
Resolution	dynamic[1]	5µm	0.5µm	1µm
		0.01% FSO	0.005% FSO	
	static[2]	1.25µm	0.125µm	0.25µm
Measuring rate		2.5kHz / 1.25kHz / 625Hz / 312.5Hz (adjustable)	10kHz	
Permissable ambient light		10,000lx	30,000lx	
Spot diameter	SMR	400 x 500µm	130µm	200µm
	MMR	400 x 500µm	60µm	60µm
	EMR	400 x 500µm	130µm	200µm
Light source		semiconductor laser <1mW, 670nm (red)		
Laser safety class		class 2 IEC 60825-1 : 2008-05		
Protection class		IP 65	sensor: IP 65 controller: IP 50	
Operation temperature		0 ... 50°C		
Storage temperature		-20 ... 70°C		
Output	analog	4 ... 20mA (0 ... 10V)	±5V (-10V ... +10V)	
	digital	RS 422 / USB (optional with cable PC1700-3/USB)	RS422 / 687.5kBaud	
	switching outputs	1 x error or 2 x limit (each pogrammable)	-	
Switch Input		laser ON-OFF / zero	-	
Operation		via touch screen on sensor or via PC with ILD 1700 tool	-	
Power supply		24VDC (11 ... 30VDC), max. 150mA	24VDC (±15%), max. 500mA	
Sensor cable length		standard: 0.25m - integrated	standard: 2m - integrated option: 5m/10m on request	
Synchronization		possible for simultaneous or alternating measurements	-	
Controller		-	functions: auto zero / signal averaging	
Electromagnetic compatibility (EMC)		EN 50081-1 and EN 50082-2		
Vibration		2g / 20 ... 500Hz		
Shock		15g / 6ms	15g / 6ms / 3 axis	
Weight	sensor	~800g	~500g	
	controller	-	~1000g	

FSO = Full Scale Output
All specifications apply for a diffusely reflecting matt white ceramic target
[1] series 1710: at 2.5 kHz without averaging, series 2210: at 10 kHz without averaging [2] with PC averaging factor 128
SMR = Start of measuring range MMR = Midrange EMR = End of measuring range

The CCD 2K sensor
Laser triangulation sensor reaches up to 2,000mm

- High accuracy and long standoff distances
- Model with measuring range up to 1000mm
- Compact design with integrated controller
- Adjustable measuring rate up to 2.5kHz
- Real Time Surface Compensation
- Analog (U/I) and digital output
- Adjustable filter functions (firmware)
- Calibration certificate included
- Configuration via software www.micro-epsilon.com/download

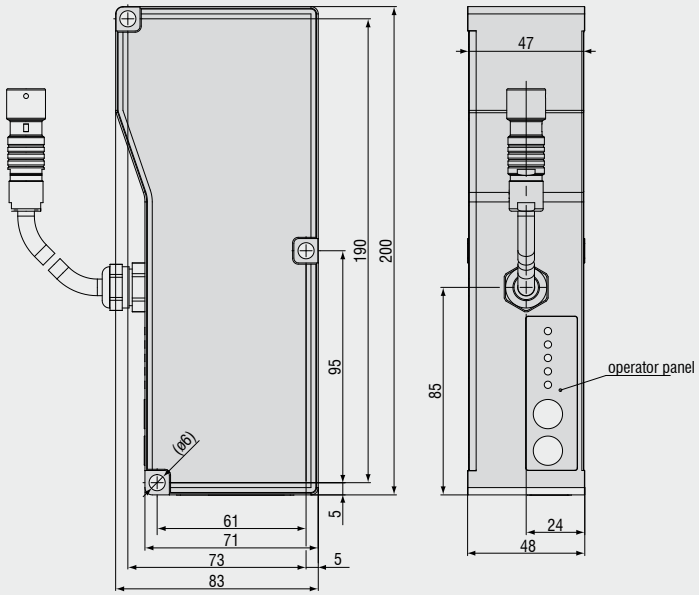

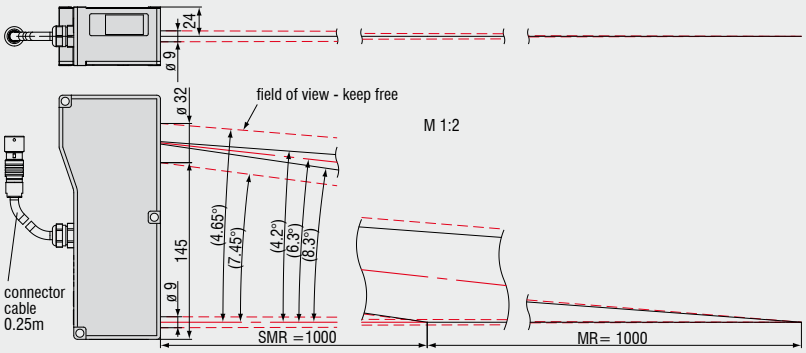

Model		ILD1710-1000
Measuring range		1,000mm
Start of measuring range		1,000mm
Midrange		1,500mm
End of measuring range		2,000mm
Linearity	≤ ±0.1% FSO	±1mm
Resolution (at 2.5kHz, without averaging)		100µm
Measuring rate		2.5kHz / 1.25kHz / 625Hz / 312.5Hz (adjustable)
Lichtquelle		semiconductor laser <1mW, 670nm (red)
Permissable ambient light	at 2.5kHz	10,000lx
Laser safety class		class 2 IEC 60825-1 : 2008-05
Spot diameter	SMR	2.5…5mm
	MMR	2.5…5mm
	EMR	2.5…5mm
Temperature stability		0.01 % FSO/°C
Operation temperature		0 … 50°C
Storage temperature		-20 ... +70°C
Output	measurements	switchable: 4 ... 20 mA / 0 ... 10 V / RS 422 / USB (optional via cable PC1700-3/USB)
	switching outputs	1 x error or 2x limit values (configurable)
Switching input		Laser ON-OFF / Zero
Operation		via keypad directly on the sensor and/or via PC with ILD1700 Tool
Power supply		24VDC (11 … 30 VDC), max. 150mA
Electromagnetic compatibility (EMC)		EN 61000-6-3 and EN 61000-6-2
Sensor cable		standard 0.25m integrated
Synchronisation		possible for simultaneous or alternating measurements
Protection class		IP 65
Vibration		2g / 20 … 500Hz
Shock		15g / 6ms
Weight		~ 0.8kg

FSO = Full Scale Output All specifications apply for a diffusely reflecting matt white ceramic target
SMR = Start of measuring range; MMR = Midrange; EMR = End of measuring range;

Blue Laser triangulation sensor
Innovative technology with blue-violet laser diode

- Six models with measuring ranges from 20 to 1000mm
- Blue Laser Technology (Blue violet laser diode 405nm)
- Compact design with integrated controller
- RTSC Real Time Surface Compensation
- Adjustable measuring rate up to 2.5kHz
- Analog (U/I) and digital output
- Adjustable filter functions (firmware)
- High flex cables for dragchain or robot use
- Calibration certificate included

optoNCDT 1700BL (20/200 mm)

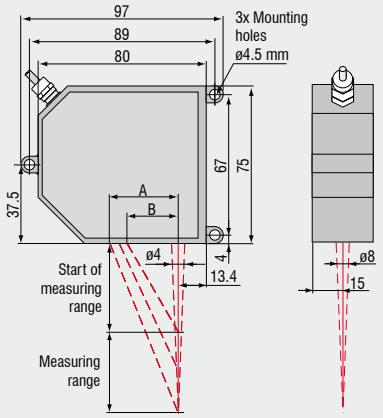

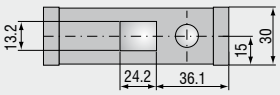

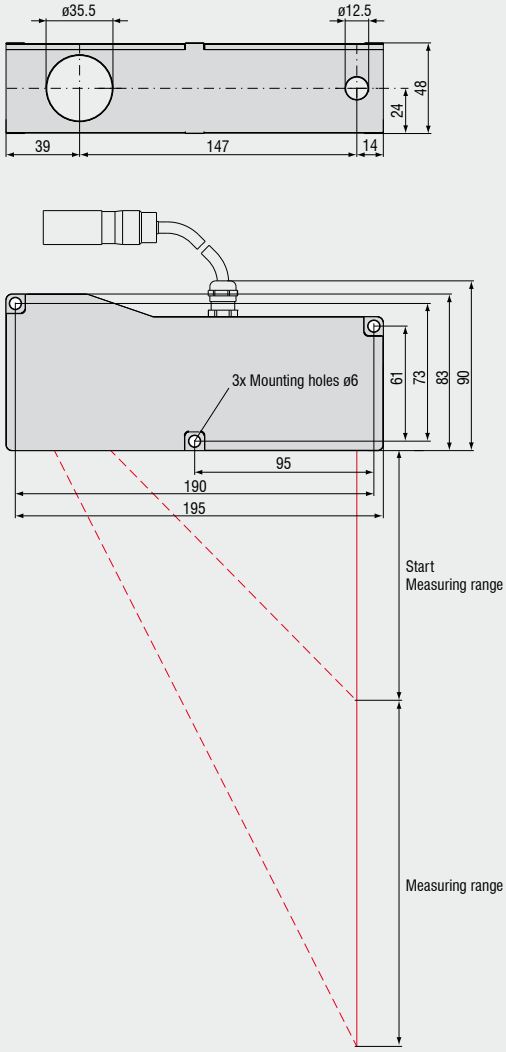

optoNCDT 1700BL (500/750 mm)

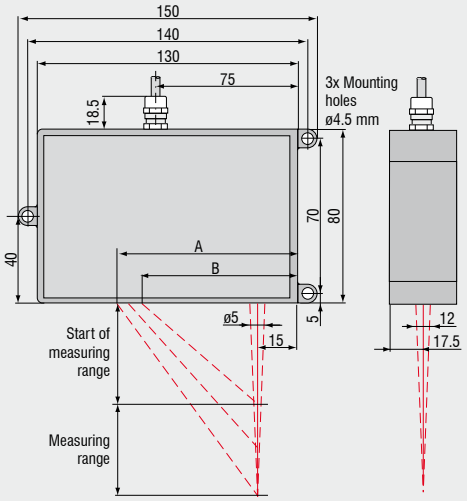

MR	SMR	A	B
20	40	30.1	22.0
20	100	33.1	24.1
500	200	101	85
750	200	101	85

Model		ILD 1700-20BL	ILD 1700-200BL	ILD 1700-500BL	ILD 1700-750BL	ILD 1710-50BL	ILD 1710-1000BL
Measuring range		20mm	200mm	500mm	750mm	50mm	1,000mm
Start of measuring range		40mm	100mm	200mm	200mm	550mm	1,000mm
Midrange		50mm	200mm	450mm	575mm	575mm	1,500mm
End of measuring range		60mm	300mm	700mm	950mm	600mm	2,000mm
Linearity		16µm	200µm	400µm	750µm	50µm	±1mm
		≤±0.08% FSO	≤±0.1% FSO	≤±0.08% FSO	≤±0.1% FSO	≤±0.1% FSO	≤±0.1% FSO
Resolution (at 2.5kHz without averaging)		1,5µm	12µm	30µm	50µm	5µm	100µm
Measuring rate		2.5kHz / 1.25kHz / 625Hz / 312.5Hz (adjustable)					
Light source		semiconductor laser <1mW, 405nm (blue violet)					
Permissable ambient light (at 2.5kHz)		10,000lx					
Laser safety class		class 2 IEC 60825-1 : 2008-05					
Spot diameter	SMR	320µm	1300µm	1500µm	1500µm	400x500µm	2.5…5mm
	MMR	45µm	1300µm	1500µm	1500µm	400x500µm	2.5…5mm
	EMR	320µm	1300µm	1500µm	1500µm	400x500µm	2.5…5mm
Temperature stability*		0.01% FSO/°C					
Operation temperature		0 ... +50 °C					
Storage temperature		-20 ... +70 °C					
Output	measurements	selectable: 4 ... 20 mA / 0 ... 10V / RS 422 / USB (option with cable PC1700-3/USB)					
	switching outputs	1 x error or 2 x limit (each pogrammable)					
Switch input		Laser ON-OFF / Zero					
Operation		via touch screen on sensor or via PC with ILD 1700 tool					
Power supply		24 VDC (11 ... 30 VDC), max. 150mA					
Sensor cable length (with connector)		standard 0.25m integrated / optional: extension 3m or 10m					
Synchronisation		possible for simultaneous or alternating measurements					
Protection class		IP 65					
Vibration		2g / 20 ... 500Hz					
Shock		15g / 6ms					
Weight (with 25cm cable)		~ 550g	~ 550g	~ 600g	~ 600g	~ 800g	~ 800g

FSO = Full scale output All specifications apply for a diffusely reflecting matt white ceramic target
*based to digital output ; SMR = Start of measuring range MMR = Midrange EMR = End of measuring range

Connector (sensor side)

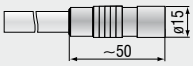

Connector (sensor cable)

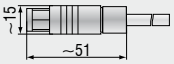

High Speed PSD Sensoren
Up to 100 kHz measurement rate

- 16 models with measuring ranges from 0.5mm to 200mm
- Sensor head and separate controller
- Up to 100kHz true analog frequency response
- INTER FACE — Analog outputs (U/I) Ethernet
- Configuration via software interface

Controller

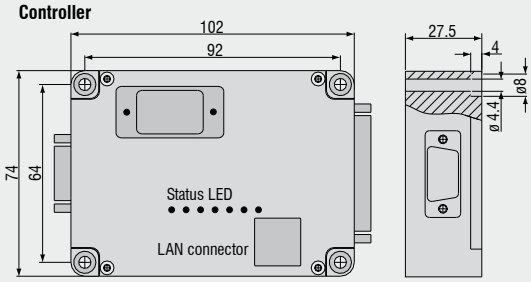

optoNCDT 1610/1630 (0.5 mm)

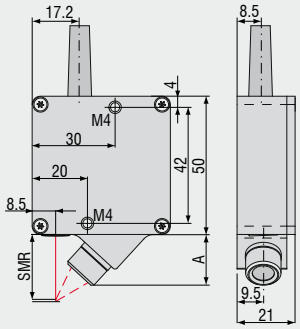

MR	SMR	A
0.5	23.75	18.4
2	23	15
4	22	15
10	40	13.6
20	55	20.5
50	115	26.6
100	170	25.8
200	240	27.5

optoNCDT 1610/1630 (2/4/10/20 mm)

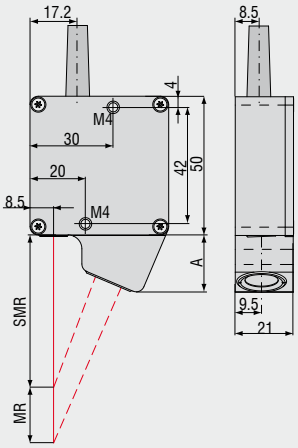

optoNCDT 1610/1630 (50/100/200 mm)

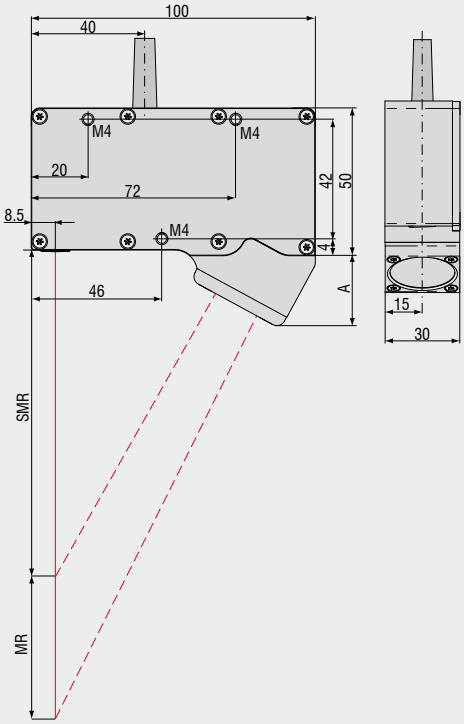

Model	LD 1610-0.5	LD 1610-2	LD 1610-4	LD 1610-10	LD 1610-20	LD 1610-50	LD 1610-100	LD 1610-200
Measuring range	0.5mm	2mm	4mm	10mm	20mm	50mm	100mm	200mm
Start of measuring range	23.75mm	23mm	22mm	40mm	55mm	115mm	170mm	240mm
Linearity	1µm	4µm	8µm	20µm	40µm	100µm	200µm	400µm
	≤0.2 % FSO							
Resolution (dynamic*)	0.3µm	1.3µm	2.6µm	6.5µm	13.0µm	32.5µm	65µm	200µm
Resolution (static**)	0.02µm	0.1µm	0.2µm	0.5µm	1µm	2.5µm	6µm	20µm
Spot diameter	0.1mm	0.2mm	0.3mm	0.6mm	0.9mm	1.5mm	1.5mm	2mm
Frequency response	10kHz (-3dB)							
Light source	laser, wavelength 670nm, red							
Laser safety class	class 2							
Vibration	10 g ... 1 kHz (sensor, 20g option)							
Operation temperature	0° ... +50°C							
Storage temperature	-20° ... +70°C							

* Measurement on white target with 10kHz ** Measurement on white target with 20Hz

Model	LD 1630-0.5	LD 1630-2	LD 1630-4	LD 1630-10	LD 1630-20	LD 1630-50
Measuring range	0.5mm	2mm	4mm	10mm	20mm	50mm
Start of measuring range	23.75mm	23mm	22mm	40mm	55mm	115mm
Linearity	1.5µm	6µm	12µm	30µm	60µm	150µm
	≤±0.3 % FSO					
Resolution (dynamic*)	0.8µm	3.5µm	7µm	17.5µm	35µm	50µm
Resolution (static**)	0.05µm	0.2µm	0.4µm	1µm	2µm	7.5µm
Spot diameter	0.1mm	0.2mm	0.3mm	0.6mm	0.9mm	1.5mm
Frequency response	100 kHz (-3 dB)					
Light source	laser, wavelength 670nm, red					
Laser safety class	class 2					
Vibration	5 g ... 1kHz (sensor, 20g option)					
Operation temperature	0° ... +40°C					
Storage temperature	-30° ... +75°C					

* Measurement on white target with 100kHz ** Measurement on white target with 230Hz

Controller		
Digital ouput	Ethernet	TCP /IP factory default IP 192.168.122.245 (frequency response 1 - 30kHz)
Analog output	displacement	±10V (option 0 ... 10V / 0 ... 5V); 4 ... 20mA
	impedance	appr. 0 Ohm (10mA max.)
	tilt	with 30° object inclination (axis A): appr. 0.5% (white target)
	cut off frequency	DC ... 10kHz / 100kHz
	temperature drift	0.02 % °C FSO
	intensitiy	0V ... 10V
Switching outputs	MIN	+24V when distance < MIN, LED yellow
	OK	+24V when distance > MIN and < MAX, LED green
	MAX	+24V when distance > MAX, LED orange
	Error	+24V, LED red
Switching hysteresis		appr. 0.5 % FSO
Ambient light		20,000 LUX
Life time		50,000h laser diode
Isolation voltage		200V DC, 0V
Humidity		up to 90% RH
Protection class		sensor: IP 64, controller: IP 40
Power supply		+24V DC / 200mA (10 ... 30V)
Connector		25 pin Sub D male connector
Cable length (standard)		2m

Accessories for all optoNCDT Series

Power supply

PS 2020 (Power Supply 24 V / 2,5 A, Input 100 - 240 VAC, output 24 VDC / 2.5 A, for snap in mounting on DIN 50022 rail)

Controller

CSP 2008 (controller for processing of multiple sensor signals; analog and digital interfaces)

Interface card

IF2008 (Interface card for individual signal processing; analog and digital interfaces)

Converter

IF2004/USB 4 Channel RS422/USB Converter

Accessories optoNCDT 1302 / 1402

Supply and output cable, rated for moving cable tracks (also available in 90° version)

PC 1402-3/I (3m, output 4 ... 20mA)
PC 1402-6/I (6m, output 4 ... 20mA)
PC 1402-3/U (3m, with integral resistance, output 1 ... 5VDC)
PC 1402-6/U (6m, with integral resistance, output 1 ... 5VDC)
PC1402-3/IF2008 (3m, supply and output cable)
PC 1402-3/USB (3m, supply and output cable)
PC1401/1402-0.2 (0.2m, adapter cable 12-pin to 7-pin)
PC 1402-3/CSP (3m, required for CSP 2008, optoNCDT1402 only)

Supply and output cable, robot rated (available in 90° version)

PCR 1402-3/I (3m)
PCR 1402-6/I (6m)
PCR 1402-8/I (8m)

Protective housing

SGH ILD 1402(01)
SGHF ILD 1402(01)

Accessories optoNCDT 1610 / 1630

Supply and output cable

PC 1605-3 (3m)
PC 1605-6 (6m)
PC 1607-5/BNC (5m, BNC connector)

Accessories optoNCDT 1700 / 1700LL

Supply and output cable (drag chain rated)

PC 1700-3 (3m)
PC 1700-10 (10m)
PC 1700-10/3/IF2008 (10m, for use with interface card IF2008)
PC 1700-3/T (3m, for use with trigger box)
PC 1700-10/T (10m, for use with trigger box)
PC 1700-3/USB (3m, with USB-RS422-converter, power supply 90 ... 230 VAC)

Supply and output cable (robot rated)

PCR 1700-5 (5m)
PCR 1700-10 (10m)

Protective housing

*SGH (*size S and M)
*SGHF (*size S and M)
*SGL (*size S and M)

Accessories optoNCDT 1710-50 / 2210

Supply and output cable (drag chain rated)

PC 1800-3 (3m)
PC 1800-8 (8m)
PC2200-3/10/RS485 (3m, RS 485 for use with interface card IF2008)
PC 2200-3/3/RS422 (3m, for IF2008/RS422/USB-converter)

Sensor cable extension (drag chain rated)

CE 1800-3 (3m)
CE 1800-8 (8m)

Accessories optoNCDT 2300

Supply and output cable

PC2300-0,5Y (Connecting cable to PC or SPS; for operation a PC2300-3/SUB-D will be required)
PC2300-3/SUB-D (3m; for operation a PC2300-0,5Y will be required)
PC2300-3/CSP (3m, connecting cable ILD2300 and CSP2008)
PC2300-10/CSP (10m, connecting cable ILD2300 and CSP2008)
PC2300-15/CSP (15m, connecting cable ILD2300 and CSP2008)
PC2300-3/IF2008 (3m, interface and supply cable)
PC2300-3/OE (3m)
PC2300-6/OE (6m)
PC2300-9/OE (9m)
PC2300-15/OE (15m)

Protective housing

*SGH (*size S and M)
*SGHF (*size S and M)
*SGL (*size S and M)

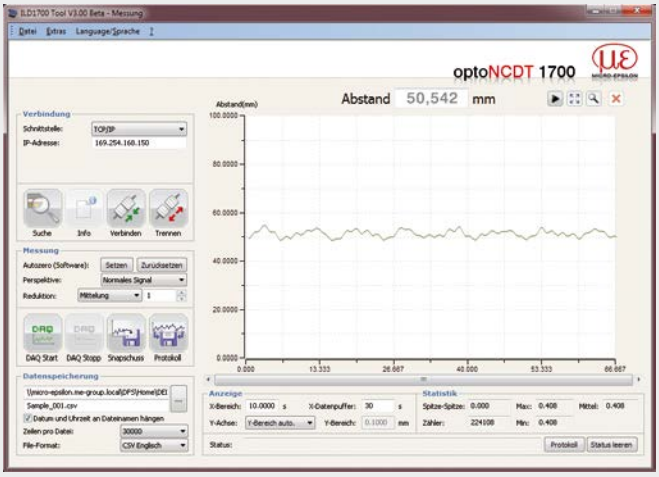

Setup and configuration software

ILD Tools is the software included for easy sensor configuration. All the settings can be implemented conveniently via a Windows user interface on the PC. The sensor parameters are sent to the sensor via the serial port and can also be saved if required. ILD Tools also includes a module which can display and save measurement results. The link to the PC is made via the sensor cable with a USB converter. [available for all series except 1302 and 16x0]

Driver support for customer software

For the optoNCDT sensors documented DLL drivers are available free of charge, which enables easy integration of the sensors into existing software.

Software download free of charge from www.micro-epsilon.com/download

Protective housing for harsh environment

To protect the laser sensors in extreme environments individual protective housings are available for all sensor models. Three options for the protective housing are offered.

Option SGH:

Completely enclosed housing with an integrated front window, where the sensor measures through the window. The water resistant housing (IP68) provides protection against aggressive solvents and detergents.

Option SGHF:

The SGHF version offers optimum protection for the sensor with integrated compressed air cooling and provides protection against fluids.

Option SGL:

Protective housing with open slot for air purging of the measurement gap and cooling purpose.

SGH ILD 1402(01) & SGHF ILD 1402(01)
for optoNCDT 1402(025)

SGx ILD size S (140x140x71 mm)
for optoNCDT 1700 / 2300
dimensions 97x75 mm

SGx ILD size M (140x180x71 mm)
for optoNCDT 1700 / 2300
dimensions 150x80 mm

IF2008 - PCI interface card

The IF 2008 interface card is designed for installation in PCs and enables the synchronous capture of 4 digital sensor signals and 2 encoders. The absolutely synchronous data acquisition plays an important role particularly for planarity or thickness measurement tasks. The data are storec in a FIFO memory in order to enable resource-saving processing in the PC in blocks.

Particular Benefits

- 4x digital signals and two encoders with basic printed circuit board
- Additional expansion board for a total of 6x digital signals, 2x encoder and 2x analog signals and 8x I/O Signals
- FIFO data memory
- Synchronous data acquisition

IF2008E - Expansion board

The IF 2008E expansion board is designed for installation in PCs and enables the synchronous capture of 2 digital sensor signals and 2 encoders as well as 8 I/O-Signals. The expansion board is connected to the basis board IF2008. The absolutely synchronous data acquisition plays an important role particularly for planarity or thickness measurement tasks.

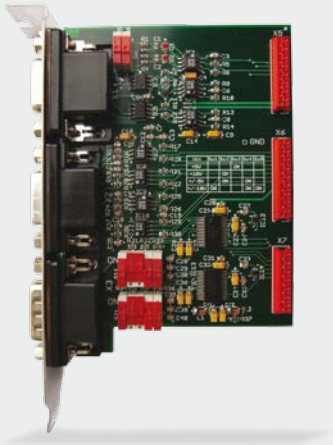

Particular Benefits

- Two digital signals, two analog signals and 8 I/O signals
- Overall with IF2008: 6 digital signals, 2 encoders and 2 analog signals and 8 I/O Signals
- FIFO data memory
- Synchronous data acquisition

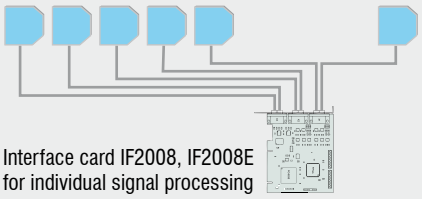

IF2004/USB 4 Channel RS422/USB Converter

[available from 07-2013]

The RS422/USB converter is used for transforming digital signals from up to 4 ILD sensors into USB data signals. Equipped with 4 trigger inputs and 1 trigger output additional USB converters can be adapted.

Particular Benefits

- 4x digital signals via RS422
- 4 trigger inputs, 1 trigger output
- Synchronous data aquisition
- USB interface

CSP2008 - Universal controller for up to six sensor signals

The controller CSP2008 has been designed to process 2 to 6 both optical and other sensors from Micro-Epsilon (6 digital or 4 analog input signals max., 2x internal + 4x external via EtherCAT modules from the company Beckhoff. EtherCAT is intended as external bus for connecting further sensors and I/O modules. The controller is equipped with a display offering multicolour backlighting which changes its color in the case of exceeding the limit value while a signal is displayed.

Universal controller with DIN rail TS 35
(dimensions not to scale)

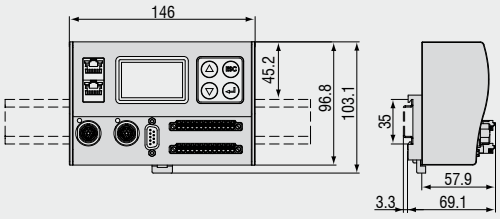

Features

- Real-time processing of input and output signals at up to 100kHz (user selectable)
- Unique user interface for the configuration of the controller via Ethernet on a PC or laptop. All user selectable functions of the controller and the measured values can be viewed, displayed and stored in real time via your own web browser without installing any 3rd part software
- Simple sensor connection with automatic sensor recognition, configuration of the sensor using buttons and display on controller or via web browser
- Modular system upgradable with additional I/O modules for customer-specific requirements. The internal communication between I/O components using EtherCAT connection (CSP 2008 acts as master)
- Extremely flexible and powerful functionality; function modules can be combined in many ways.
- Simple mounting using DIN rail TS 35

Sensors via RS422

optoNCDT 1302
optoNCDT 1402
optoNCDT 1700
optoNCDT 2300
optoCONTROL 2500
optoCONTROL 2600
confocalDT 2451/2471

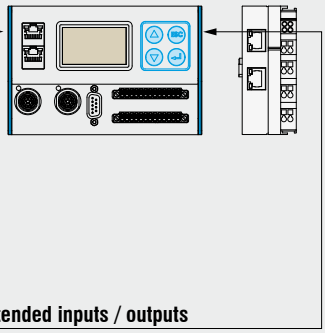

Beckhoff modules for extended inputs / outputs

EK1100, EtherCat bus coupler
EL4102, Analog output terminal 0 V bis +10 V, 2 channels (16 Bit), EtherCAT
EL4132, Analog output terminal -10 V bis +10 V, 2 channels (16 Bit), EtherCAT
EL4024, Analog output terminal 4 ... 20 mA, 4 channels (12 Bit), EtherCAT
EL2002, Digital output terminal, 24 VDC/ 0,5 A, 2 channels, EtherCAT
EL2002, Digital output terminal, 24 VDC/ 0,5 A, 2 channels, EtherCAT
EL2004, Digital output terminal, 24 VDC/ 0,5 A, 4 channels, EtherCAT
EL3142, Analog input terminal 0 ... 20 mA, 2 channels (16 Bit), EtherCAT
EL3162, Analog input terminal 0 ... 10 V, 2 channels (16 Bit), EtherCAT
EL1002, Digital input terminal 24 VDC/3 ms, 2 channels, EtherCAT
EL1012, Digital input terminal 24 VDC/10 μs, 2 channels, EtherCAT
EL1014, Digital input terminal 24 VDC/10 μs, 4 channels, EtherCAT
EL1104, Digital input terminal 24 VDC/3 ms, 4 channels, EtherCAT
EL5101, Incremental encoder interface, RS485 differential inputs, EtherCAT
EK1122, 2-Port EtherCAT junction
RS422 extension terminal

High performance sensors made by Micro-Epsilon

Sensors and systems for displacement and position

Sensors and measurement devices for non-contact temperature measurement

2D/3D profile sensors (laser scanner)

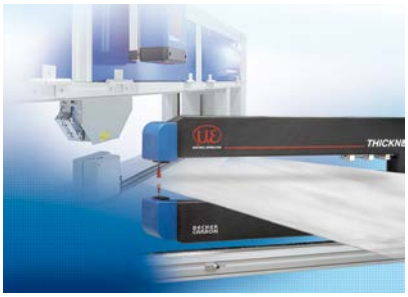

Measurement and inspection systems for quality assurance

Optical micrometers, fiber optic sensors and fiber optics

Color recognition sensors, LED analyzers and color online spectrometer

Modifications reserved / Y9766188-D051063GKE

MICRO-EPSILON

MICRO-EPSILON USA
8120 Brownleigh Dr. · Raleigh, NC 27617 / USA
Phone +1/919/787-9707 · Fax +1/919/787-9706
me-usa@micro-epsilon.com · **www.micro-epsilon.com**