Keywords: current source, software-programmable, voltage controlled, digital potentiometer

Mar 14, 2005

APPLICATION NOTE 3464

Precision Current Source is Software-Programmable

Abstract: A shunt regulator provides a constant reference voltage across a digital potentiometer that, in conjunction with an op amp and transistor, forms a software-programmable, voltage-controlled current source.

With the addition of a few inexpensive miniature components, the hard-wired, voltage-controlled current source of yesterday becomes a software-programmable voltage-controlled current source (Figure 1).

A digital potentiometer (U1) in conjunction with a precision op amp (U2) sets current through the pass transistor (I_{SET}), and a shunt regulator (U3) provides a constant reference voltage across the digital pot. By operating in its linear region, the transistor controls load current in response to the applied gate voltage. Each incremental step of the digital pot increases or decreases the voltage V_{IN+} at the op amp's noninverting input. Thus, the pot's wiper voltage (V_{IN+}) varies with respect to the reference voltage, which in turn remains stable with respect to the supply rail:

$$V_{IN+} = \frac{V_{REF} \times [R_{TOTAL(DP)}/(\text{total no. of steps})]}{R_{TOTAL(DP)}}$$

Many types of digital potentiometers are currently available, and the interface to these devices (besides the hard-wired type) can be one, two, or three wires. U1, for example, has a 3-wire SPI interface, and provides an end-to-end resistance of 50kΩ with 256 incremental settings. Thus, each increment of the digital pot changes V_{IN+} by:

$$V_{IN+} = \frac{3V \times [50k\Omega/256]}{50k\Omega} = 11.72mV$$

Op amp U2 regulates current through the pass transistor, and the digital pot sets current through the R_{SENSE} resistor. The voltage across R_{SENSE} determines current through the pass transistor (I_{SET}):

$$I_{SET} = (V_{CC} - V_{IN+})/R_{SENSE}$$

The circuit can provide any current level for which the external components (R_{SENSE} and the pass transistor) can handle the associated power dissipation (P = IV). Because the ratio setting of digital potentiometers is very good (the typical ratiometric resistor tempco is 5ppm/°C), precision and stability for the current source depends primarily on the precision and stability of U3 and R_{SENSE} combined.

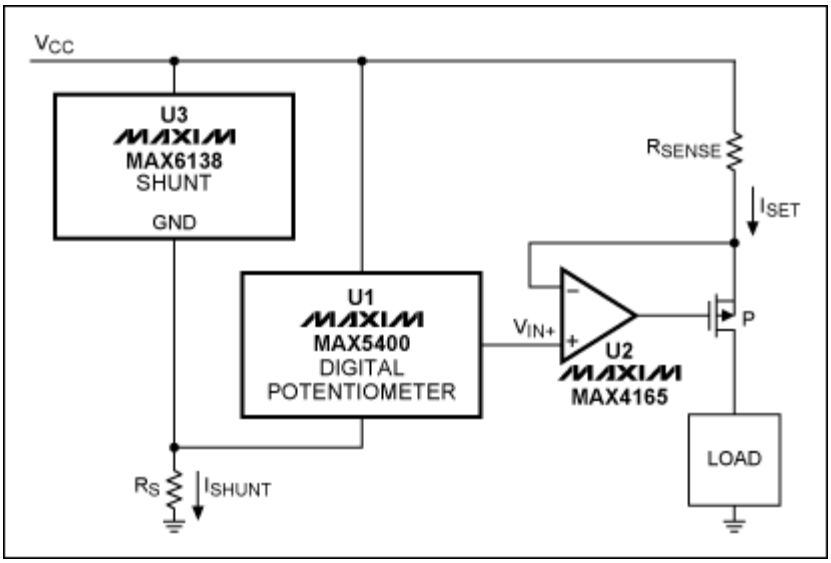

Figure 1. This software-programmable, precision current source applies current to the load in 256 equal increments.

A similar version of this article appeared in the December 17, 2004 issue of *EDN* magazine.

Related Parts

MAX4165	High-Output-Drive, Precision, Low-Power, Single-Supply, Rail-to-Rail I/O Op Amps with Shutdown	-- Free samples
MAX5400	256-Tap SOT-PoT, Low-Drift Digital Potentiometers in SOT23	
MAX6138	0.1%, 25ppm, SC70 Shunt Voltage Reference with Multiple Reverse Breakdown Voltages	-- Free samples

Automatic Updates

Would you like to be automatically notified when new application notes are published in your areas of interest? Sign up for EE-Mail™.

More Information

For technical support: http://www.maxim-ic.com/support
For samples: http://www.maxim-ic.com/samples
Other questions and comments: http://www.maxim-ic.com/contact

Application note 3464: http://www.maxim-ic.com/an3464
AN3464, AN 3464, APP3464, Appnote3464, Appnote 3464
Copyright © by Maxim Integrated Products
Additional legal notices: http://www.maxim-ic.com/legal