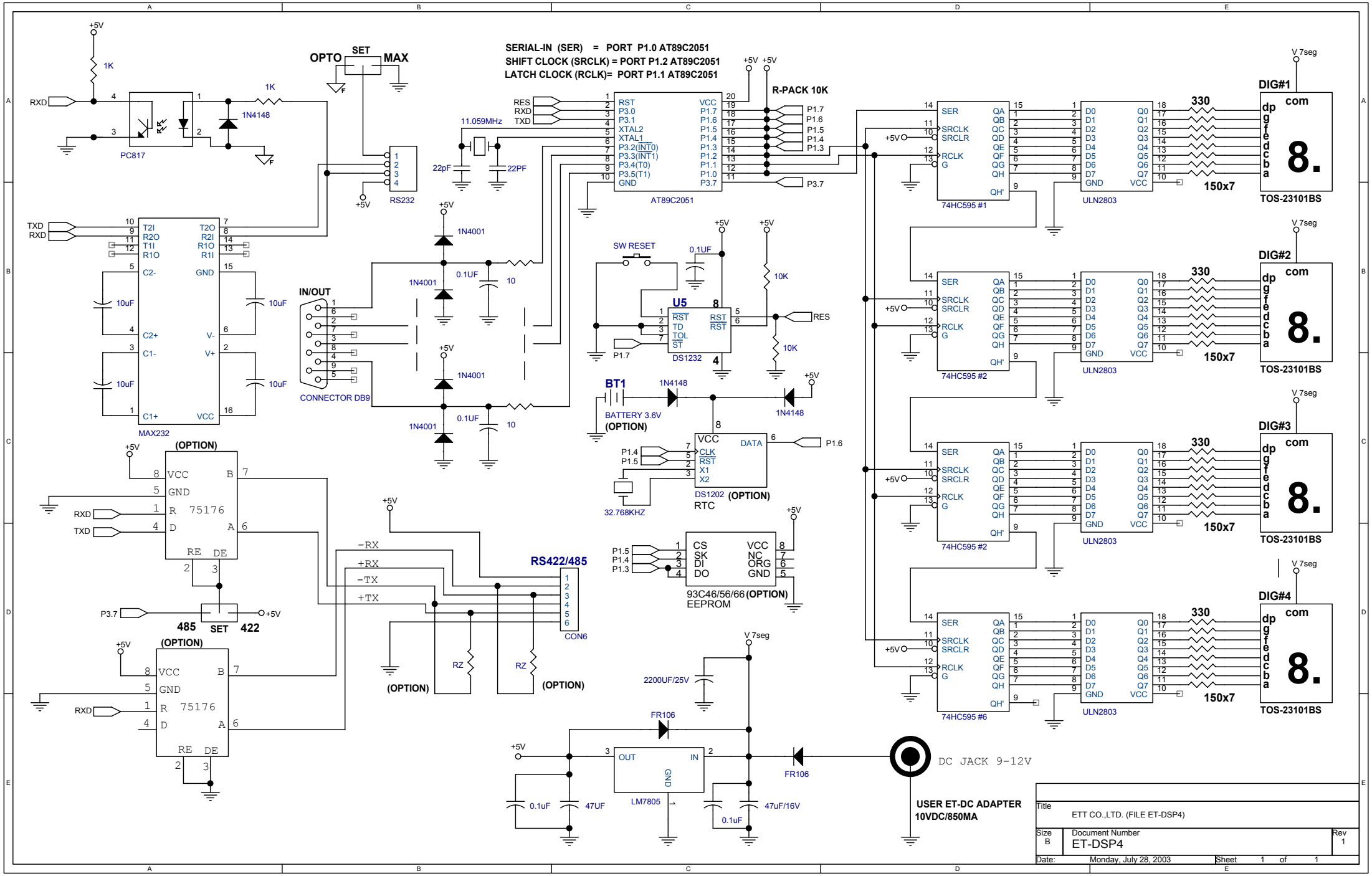
SERIAL-IN (SER) = PORT P1.0 AT89C2051
SHIFT CLOCK (SRCLK) = PORT P1.2 AT89C2051
LATCH CLOCK (RCLK)= PORT P1.1 AT89C2051
OPTO
SET
MAX
PC817
1N4148
RS232
AT89C2051
R-PACK 10K
11.059MHz
22pF
MAX232
CONNECTOR DB9
IN/OUT
1N4001
SW RESET
DS1232
U5
BT1
BATTERY 3.6V
(OPTION)
DS1202
RTC
32.768KHZ
93C46/56/66
EEPROM
75176
RS422/485
CON6
485
422
74HC595 #1
74HC595 #2
74HC595 #6
ULN2803
DIG#1
DIG#2
DIG#3
DIG#4
TOS-23101BS
150x7
330
V 7seg
2200UF/25V
FR106
LM7805
47UF
47uF/16V
DC JACK 9-12V
USER ET-DC ADAPTER
10VDC/850MA
Title
ETT CO.,LTD. (FILE ET-DSP4)
Size
B
Document Number
ET-DSP4
Rev
1
Date:
Monday, July 28, 2003
Sheet 1 of 1

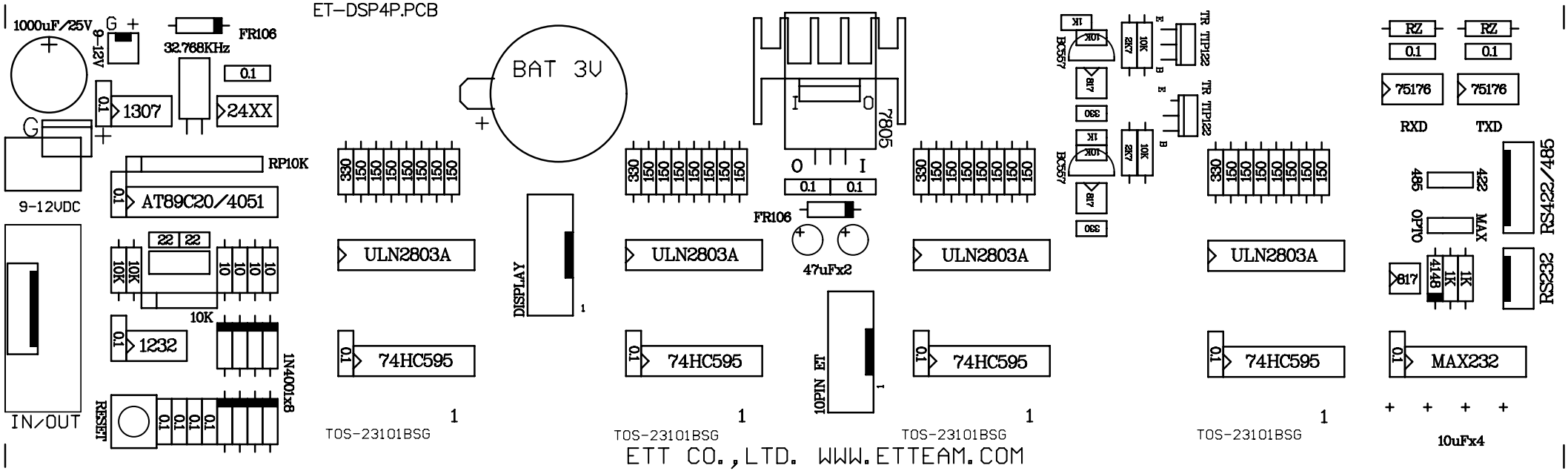
ET-DSP4P.PCB
1000uF/25V
G
+
9-12V
FR106
32.768KHz
0.1
1307
24XX
G
+
RP10K
AT89C20/4051
9-12VDC
22
22
10K
10K
10
10
10
10K
1232
1N4001x8
IN/OUT
RESET
0.1
0.1
0.1
0.1
0.1
330
150
150
150
150
150
150
150
150
ULN2803A
74HC595
TOS-23101BSG
BAT 3V
+
DISPLAY
1
7805
I
O
O
I
0.1
0.1
FR106
47uFx2
10PIN ET
1
TR TIP122
TR TIP122
BC557
BC557
1K
10K
2K7
10K
4K7
330
E
B
RZ
0.1
75176
RXD
TXD
485
422
OPTO
MAX
RS422/485
RS232
817
4148
1K
1K
MAX232
10uFx4
ETT CO.,LTD. WWW.ETTEAM.COM