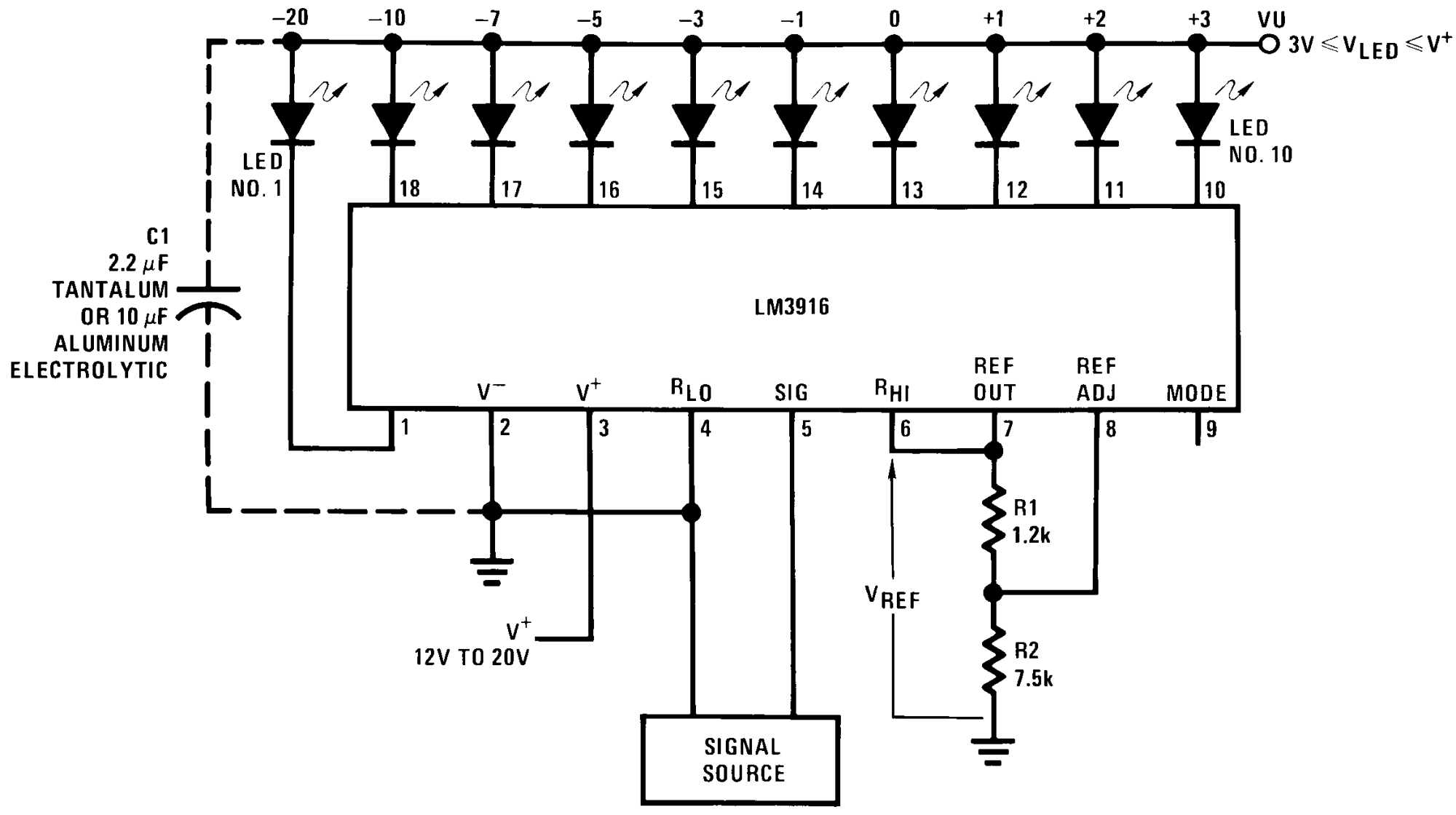
−20
−10
−7
−5
−3
−1
0
+1
+2
+3
VU
3V ≤ VLED ≤ V+
LED NO. 1
LED NO. 10
18
17
16
15
14
13
12
11
10
C1
2.2 μF
TANTALUM
OR 10 μF
ALUMINUM
ELECTROLYTIC
LM3916
V−
V+
RLO
SIG
RHI
REF OUT
REF ADJ
MODE
1
2
3
4
5
6
7
8
9
R1
1.2k
VREF
R2
7.5k
V+
12V TO 20V
SIGNAL SOURCE