DEVELOPMENT SUITE

Proton

INTEGRATED DEVELOPMENT ENVIRONMNET

mecanique
www.mecanique.co.uk

PROTEUS

Crownhill Associates
smart electronic solutions

Crownhill reserves the right to make changes to the products contained in this publication in order to improve design, performance or reliability. Except for the limited warranty covering the physical CD-ROM and Hardware License key supplied with this publication as provided in the End-User License agreement, the information and material content of this publication and accompanying CD-ROM are provided “as is” without warranty of any kind express or implied including without limitation any warranty concerning the accuracy adequacy or completeness of such information or material or the results to be obtained from using such information or material. Neither Crownhill Associates Limited or the author shall be responsible for any claims attributable to errors omissions or other inaccuracies in the information or materials contained in this publication and in no event shall Crownhill Associates or the author be liable for direct indirect or special incidental or consequential damages arising out of the use of such information or material. Neither Crownhill or the author convey any license under any patent or other right, and make no representation that the circuits are free of patent infringement. Charts and schedules contained herein reflect representative operating parameters, and may vary depending upon a user’s specific application.

All terms mentioned in this book that are known to be trademarks or service marks have been appropriately marked. Use of a term in this publication should not be regarded as affecting the validity of any trademark.

PICmicro^{tm} is a trade name of Microchip Technologies Inc.   www.microchip.com

PROTON^{tm} is a trade name of Crownhill Associates Ltd.   www.crownhill.co.uk

EPIC^{tm} is a trade name of microEngineering Labs Inc.   www.microengineeringlabs.com

The Proton IDE was written by David Barker of Mecanique   www.mecanique.co.uk

Proteus VSM © Copyright Labcenter Electronics Ltd 2004   www.labcenter.co.uk

Web url’s correct at time of publication

The PROTON+ compiler and documentation was written by Les Johnson and published by Crownhill Associates Limited, Cambridge ,England, 2004.

Cover design © 2004 Crownhill Associates Limited – All rights reserved

All Manufacturer Trademarks Acknowledged

This publication was printed and bound in the United Kingdom.
No part of this publication may be reproduced or utilized in any form or by any means, electronic or mechanical, including photocopying, recording, or by any information storage and retrieval system, without permission in writing from the publisher.

If you should find any anomalies or omission in this document, please contact us, as we appreciate your assistance in improving our products and services.

First published by Crownhill Associates Limited, Cambridge ,England, 2004.

Introduction

The PROTON+ compiler was written with simplicity and flexibility in mind. Using BASIC, which is almost certainly the easiest programming language around, you can now produce extremely powerful applications for your PICmicro^{tm} without having to learn the relative complexity of assembler, or wade through the gibberish that is C. Having said this, various 'enhancements' for extra versatility and ease of use have been included in the event that assembler is required.

The PROTON+ IDE provides a seamless development environment, which allows you to write, debug and compile your code within the same Windows environment, and by using a compatible programmer, just one key press allows you to program and verify the resulting code in the PICmicro^{tm} of your choice!

The front end of the compilers are Windows based. Simply specify the device at the program beginning and the code produced will be fully compatible with that device.

Contact Details
For your convenience we have set up a web site **www.picbasic.org**, where there is a section for users of the PROTON+ compiler, to discuss the compiler, and provide self help with programs written for PROTON BASIC, or download sample programs. The web site is well worth a visit now and then, either to learn a bit about how other peoples code works or to request help should you encounter any problems with programs that you have written.

Should you need to get in touch with us for any reason our details are as follows: -

Postal
Crownhill Associates Limited.
Old Station Yard
Station Road
Ely
Cambridgeshire.
CB6 3PZ.

Telephone
(+44) 01353 749990

Fax
(+44) 01353 749991

Email
sales@crownhill.co.uk

Web Sites
http://www.crownhill.co.uk
http://www.picbasic.org

Table of Contents.

Introduction 1

Table of Contents. 2

PROTON IDE Overview 9

- Menu Bar 10
- Edit Toolbar 12
- Code Explorer 14
- Results View 17
- Editor Options 18
- Highlighter Options 20
- On Line Updating 21
- Compile and Program Options 22
- Installing a Programmer 23
- Creating a custom Programmer Entry 24
- Microcode Loader 26
- Loader Options 28
- Loader Main Toolbar 29
- IDE Plugins 30
- ASCII Table 31
- HEX View 31
- Assembler Window 32
- Assembler Main Toolbar 33
- Assemble and Program Toolbar 34
- Assembler Editor Options 34
- Serial Communicator 35
- Serial Communicator Main Toolbar 36
- Labcenter Electronics PROTEUS VSM 39
- ISIS Simulator Quick Start Guide 39

PICmicro^{tm} Devices 44

- Limited 12-bit Device Compatibility. 44
- Programming Considerations for 12-bit Devices. 45
- Device Specific issues 46
- Identifiers 47
- Line Labels 47
- Variables 48
- Floating Point Math 50

Aliases 53
Constants........ 56
Symbols 56
Numeric Representations 57
Quoted String of Characters 57
Ports and other Registers 57
General Format........ 58
Line Continuation Character '_'........ 58

Inline Commands within Comparisons 59

Creating and using Arrays 60

Creating and using Strings 66

Creating and using VIRTUAL STRINGS with CDATA........ 72

Creating and using VIRTUAL Strings with EDATA 74

STRING Comparisons........ 76

Relational Operators........ 79

Boolean Logic Operators 80

MATH OPERATORS........ 81
ABS........ 90
ACOS........ 91
ASIN 92
ATAN 93
COS 94
DCD 95
EXP........ 96
LOG 97
LOG10 98
MAX........ 99
MIN 99
NCD 99
POW 100
REV 101
SIN........ 102
SQR........ 103
TAN........ 104

DIV32 105
ADIN 111
ASM..ENDASM 113
BOX 114
BRANCH 115
BRANCHL 116
BREAK 117
BSTART 119
BSTOP 120
BRESTART 120
BUSACK 120
BUSIN 121
BUSOUT 124
BUTTON 128
CALL 130
CDATA 131
CF_INIT 136
CF_SECTOR 137
CF_READ 142
CF_WRITE 145
CIRCLE 149
CLEAR 150
CLEARBIT 151
CLS 152
CONFIG 153
COUNTER 154
CREAD 155
CURSOR 156
CWRITE 157
DATA 158
DEC 160

DECLARE 161
- MISC Declares. 161
- TRIGONOMETRY Declares. 164
- ADIN Declares. 165
- BUSIN - BUSOUT Declares. 165
- HBUSIN - HBUSOUT Declare. 166
- HSERIN, HSEROUT, HRSIN and HRSOUT Declares. 166
- Second USART Declares for use with HRSIN2, HSERIN2, HRSOUT2 and HSEROUT2.167
- HPWM Declares. 168
- LCD PRINT Declares. 169
- GRAPHIC LCD Declares. 170
- KEYPAD Declare. 171
- RSIN - RSOUT Declares. 171
- SERIN - SEROUT Declare. 172
- SHIN - SHOUT Declare. 173
- Compact Flash Interface Declares 174
- CRYSTAL Frequency Declare. 175

DELAYMS 176

DELAYUS 177

DEVICE 178

DIG 179

DIM 180

DISABLE 184

DTMFOUT 185

EDATA 186

ENABLE 191
- Software Interrupts in BASIC 192

END 193

EREAD 194

EWRITE 195

FOR...NEXT...STEP 196

FREQOUT 198

GETBIT 200

GOSUB 201

GOTO 205

HBSTART 206

HBSTOP 207

HBRESTART 207

HBUSACK 207

HBUSIN 208

HBUSOUT 211

HIGH 214

HPWM 215

HRSIN 216

HRSOUT 222

HSERIN 227

HSEROUT 233

IF..THEN..ELSEIF..ELSE..ENDIF 238

INCLUDE 240

INC 242

INKEY 243

INPUT 244

LCDREAD 245

LCDWRITE 246

LDATA 247

LET 252

LEN 253

LEFT$ 255

LINE 257

LINETO 258

LOADBIT 259

LOOKDOWN 260

LOOKDOWNL 261

LOOKUP 262

LOOKUPL 263

LOW 264

LREAD 265

LREAD8, LREAD16, LREAD32 268

MID$ 270

ON GOTO 272

ON GOTOL 274

ON GOSUB 275

ON_INTERRUPT 277
  Initiating an interrupt. 278
  Format of the interrupt handler. 279

ON_LOW_INTERRUPT 280

OUTPUT 282

ORG 283

OREAD 284

OWRITE 289
PEEK 291
PIXEL 292
PLOT 293
POKE 295
POP 296
POT 298
PRINT 299
  Using a Graphic LCD 304
PULSIN 310
PULSOUT 311
PUSH 312
PWM 317
RANDOM 318
RCIN 319
READ 322
REM 324
REPEAT...UNTIL 325
RESTORE 326
RESUME 327
RETURN 328
RIGHT$ 330
RSIN 332
RSOUT 337
SEED 342
SELECT..CASE..ENDSELECT 343
SERIN 346
SEROUT 353
SERVO 361
SETBIT 363
SET_OSCCAL 364
SET 365
SHIN 366
SHOUT 368
SNOOZE 370
SLEEP 371
SOUND 373

SOUND2 374
STOP 375
STRN 376
STR$ 377
SWAP 379
SYMBOL 380
TOGGLE 381
TOLOWER 382
TOUPPER 384
UNPLOT 386
VAL 387
VARPTR 389
WHILE...WEND 390
USBINIT 391
USBIN 394
USBOUT 396
XIN 397
XOUT 399

Protected Compiler Words 401

PROTON IDE Overview

Proton IDE is a professional and powerful visual Integrated Development Environment (IDE) designed specifically for the Proton Plus compiler. Proton IDE is designed to accelerate product development in a comfortable user development environment without compromising performance, flexibility or control.

Code Explorer

Possibly the most advanced code explorer for PIC based development on the market. Quickly navigate your program code and device Special Function Registers (SFRs).

Compiler Results

Provides information about the device used, the amount of code and data used, the version number of the project and also date and time. You can also use the results window to jump to compilation errors.

Programmer Integration

The Proton IDE enables you to start your preferred programming software from within the development environment . This enables you to compile and then program your microcontroller with just a few mouse clicks (or keyboard strokes, if you prefer).

Integrated Bootloader

Quickly download a program into your microcontroller without the need of a hardware programmer. Bootloading can be performed in-circuit via a serial cable connected to your PC.

Real Time Simulation Support

Proteus Virtual System Modelling (VSM) combines mixed mode SPICE circuit simulation, animated components and microprocessor models to facilitate co-simulation of complete microcontroller based designs. For the first time ever, it is possible to develop and test such designs before a physical prototype is constructed.

Serial Communicator

A simple to use utility which enables you to transmit and receive data via a serial cable connected to your PC and development board. The easy to use configuration window allows you to select port number, baudrate, parity, byte size and number of stop bits. Alternatively, you can use Serial Communicator favourites to quickly load pre-configured connection settings.

Online Updating

Online updates enable you to keep right up to date with the latest IDE features and fixes.

Plugin Architecture

The Proton IDE has been designed with flexibility in mind with support for IDE plugins.

Supported Operating Systems

Windows 98, 98SE, ME, NT 4.0 with SP 6, 2000, XP (recommended)

Hardware Requirements

233 MHz Processor (500 MHz or higher recommended)
64 MB RAM (128 MB or higher recommended)
40 MB hard drive space
16 bit graphics card.

Menu Bar

File Menu

- **New** - Creates a new document. A header is automatically generated, showing information such as author, copyright and date. To toggle this feature on or off, or edit the header properties, you should select editor options.

- **Open** - Displays a open dialog box, enabling you to load a document into the Proton IDE. If the document is already open, then the document is made the active editor page.

- **Save** - Saves a document to disk. This button is normally disabled unless the document has been changed. If the document is 'untitled', a save as dialog is invoked. A save as dialog is also invoked if the document you are trying to save is marked as read only.

- **Save As** - Displays a save as dialog, enabling you to name and save a document to disk.
-

  Close - Closes the currently active document.

- **Close All** - Closes all editor documents and then creates a new editor document.

- **Reopen** - Displays a list of Most Recently Used (MRU) documents.

- **Print Setup** - Displays a print setup dialog.

- **Print Preview** - Displays a print preview window.

- **Print** - Prints the currently active editor page.

- **Exit** - Enables you to exit the Proton IDE.

Edit Menu

- **Undo** - Cancels any changes made to the currently active document page.

- **Redo** - Reverse an undo command.

- **Cut** - Cuts any selected text from the active document page and places it into the clipboard. This option is disabled if no text has been selected. Clipboard data is placed as both plain text and RTF.

- **Copy** - Copies any selected text from the active document page and places it into the clipboard. This option is disabled if no text has been selected. Clipboard data is placed as both plain text and RTF.

- **Paste** - Paste the contents of the clipboard into the active document page. This option is disabled if the clipboard does not contain any suitable text.

- **Delete** - Deletes any selected text. This option is disabled if no text has been selected.

- **Select All** - Selects the entire text in the active document page.

- **Change Case** - Allows you to change the case of a selected block of text.

- **Find** - Displays a find dialog.

- **Replace** - Displays a find and replace dialog.

- **Find Next** - Automatically searches for the next occurrence of a word. If no search word has been selected, then the word at the current cursor position is used. You can also select a whole phrase to be used as a search term. If the editor is still unable to identify a search word, a find dialog is displayed.

View Menu

- **Results** - Display or hide the results window.

- **Code Explorer** - Display or hide the code explorer window.

- **Loader** - Displays the MicroCode Loader application.

- **Loader Options** - Displays the MicroCode Loader options dialog.

- **Compile and Program Options** - Displays the compile and program options dialog.

- **Editor Options** - Displays the application editor options dialog.

- **Toolbars** - Display or hide the main, edit and compile and program toolbars. You can also toggle the toolbar icon size.

- **Plugin** - Display a drop down list of available IDE plugins.

- **Online Updates** - Executes the IDE online update process, which checks online and installs the latest IDE updates.

Help Menu

- **Help Topics** - Displays the helpfile section for the toolbar.

- **Online Forum** - Opens your default web browser and connects to the online Proton Plus developer forum.

- **About** - Display about dialog, giving both the Proton IDE and Proton compiler version numbers.

Main Toolbar

New

Creates a new document. A header is automatically generated, showing information such as author, copyright and date. To toggle this feature on or off, or edit the header properties, you should select the editor options dialog from the main menu.

Open

Displays a open dialog box, enabling you to load a document into the Proton IDE. If the document is already open, then the document is made the active editor page.

Save

Saves a document to disk. This button is normally disabled unless the document has been changed. If the document is 'untitled', a save as dialog is invoked. A save as dialog is also invoked if the document you are trying to save is marked as read only.

Cut

Cuts any selected text from the active document page and places it into the clipboard. This option is disabled if no text has been selected. Clipboard data is placed as both plain text and RTF.

Copy

Copies any selected text from the active document page and places it into the clipboard. This option is disabled if no text has been selected. Clipboard data is placed as both plain text and RTF.

Paste

Paste the contents of the clipboard into the active document page. This option is disabled if the clipboard does not contain any suitable text.

Undo

Cancels any changes made to the currently active document page.

Redo

Reverse an undo command.

Print

Prints the currently active editor page.

Edit Toolbar

Find

Displays a find dialog.

Find and Replace

Displays a find and replace dialog.

Indent

Shifts all selected lines to the next tab stop. If multiple lines are not selected, a single line is moved from the current cursor position. All lines in the selection (or cursor position) are moved the same number of spaces to retain the same relative indentation within the selected block. You can change the tab width from the editor options dialog.

Outdent

Shifts all selected lines to the previous tab stop. If multiple lines are not selected, a single line is moved from the current cursor position. All lines in the selection (or cursor position) are moved the same number of spaces to retain the same relative indentation within the selected block. You can change the tab width from the editor options dialog.

Block Comment

Adds the comment character to each line of a selected block of text. If multiple lines are not selected, a single comment is added to the start of the line containing the cursor.

Block Uncomment

Removes the comment character from each line of a selected block of text. If multiple lines are not selected, a single comment is removed from the start of the line containing the cursor.

Compile and Program Toolbar

Compile

Pressing this button, or F9, will compile the currently active editor page. The compile button will generate a *.hex file, which you then have to manually program into your microcontroller. Pressing the compile button will automatically save all open files to disk. This is to ensure that the compiler is passed an up to date copy of the file(s) your are editing.

Compile and Program

Pressing this button, or F10, will compile the currently active editor page. Pressing the compile and program button will automatically save all open files to disk. This is to ensure that the compiler is passed an up to date copy of the file(s) your are editing.

Unlike the compile button, the Proton IDE will then automatically invoke a user selectable application and pass the compiler output to it. The target application is normally a device programmer, for example, MicroCode Loader. This enables you to program the generated *.hex file into your MCU. Alternatively, the compiler output can be sent to an IDE Plugin. For example, the Labcenter Electronics Proteus VSM simulator. You can select a different programmer or Plugin by pressing the small down arrow, located to the right of the compile and program button...

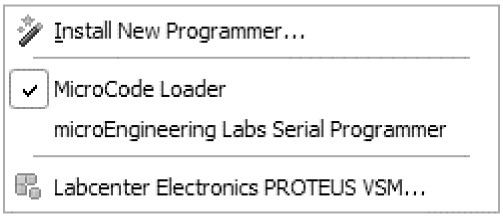
Install New Programmer...
☑ MicroCode Loader
microEngineering Labs Serial Programmer
Labcenter Electronics PROTEUS VSM...

In the above example, MicroCode Loader has been selected as the default device programmer. The compile and program drop down menu also enables you to install new programming software. Just select the 'Install New Programmer...' option to invoke the programmer configuration wizard. Once a program has been compiled, you can use F11 to automatically start your programming software or plugin. You do not have to re-compile, unless of course your program has been changed.

Loader Verify

This button will verify a *.hex file (if one is available) against the program resident on the microcontroller. The loader verify button is only enabled if MicroCode Loader is the currently selected programmer.

Loader Read

This button will upload the code and data contents of a microcontroller to MicroCode Loader. The loader read button is only enabled if MicroCode Loader is the currently selected programmer.

Loader Erase

This button will erase program memory for the 18Fxxx(x) series of microcontroller. The loader erase button is only enabled if MicroCode Loader is the currently selected programmer.

Loader Information

This button will display the microcontroller loader firmware version. The loader information button is only enabled if MicroCode Loader is the currently selected programmer.

Code Explorer

The code explorer enables you to easily navigate your program code. The code explorer tree displays your currently selected processor, include files, declares, constants, variables, alias and modifiers, labels, macros and data labels.

Device Node

The device node is the first node in the explorer tree. It displays your currently selected processor type. For example, if you program has the declaration: -

DEVICE 16F877

then the name of the device node will be 16F877. You don't need to explicitly give the device name in your program for it to be displayed in the explorer. For example, you may have an include file with the device type already declared. The code explorer looks at all include files to determine the device type. The last device declaration encountered is the one used in the explorer window. If you expand the device node, then all Special Function Registers (SFRs) belonging to the selected device are displayed in the explorer tree. Clicking on a SFR node will invoke the SFR View window, as shown below

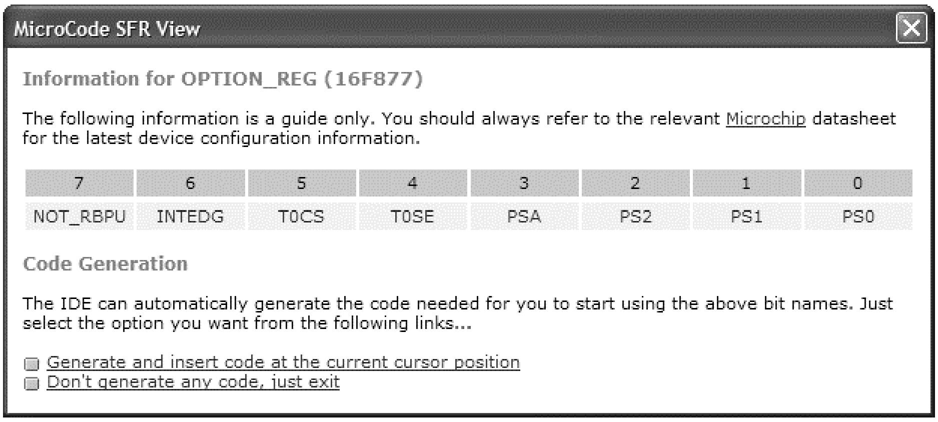
MicroCode SFR View

Information for OPTION_REG (16F877)

The following information is a guide only. You should always refer to the relevant Microchip datasheet for the latest device configuration information.

7	6	5	4	3	2	1	0
NOT_RBPU	INTEDG	T0CS	T0SE	PSA	PS2	PS1	PS0

Code Generation

The IDE can automatically generate the code needed for you to start using the above bit names. Just select the option you want from the following links...

☐ Generate and insert code at the current cursor position
☐ Don't generate any code, just exit

The SFR view displays all bitnames that belong to a particular register. Clicking a bitname will display a small hint window that gives additional information about a bitname. For example, if you click on T0CS, then the following hint is displayed: -

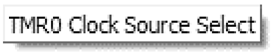
TMR0 Clock Source Select

The SFR view window can automatically generate the code needed for you to start using the bitnames in your program. All you need to do is place your cursor at the point in your program where you want the code placed, and then select the generate code option. Using the above OPTION_REG example above will generate: -

```
Symbol PS0 = OPTION_REG.0            ' Prescaler Rate Select
Symbol PS1 = OPTION_REG.1            ' Prescaler Rate Select
Symbol PS2 = OPTION_REG.2            ' Prescaler Rate Select
Symbol PSA = OPTION_REG.3            ' Prescaler Assignment
Symbol T0SE = OPTION_REG.4           ' TMR0 Source Edge Select
Symbol T0CS = OPTION_REG.5           ' TMR0 Clock Source Select
Symbol INTEDG = OPTION_REG.6         ' Interrupt Edge Select
Symbol NOT_RBPU = OPTION_REG.7 ' PORTB Pull-up Enable
```

Please note that the SFR View window is not currently implemented for all device types.

Include File Node
When you click on an include file, the IDE will automatically open that file for viewing and editing. Alternatively, you can just explorer the contents of the include file without having to open it. To do this, just click on the ⊞icon and expand the node. For example: -

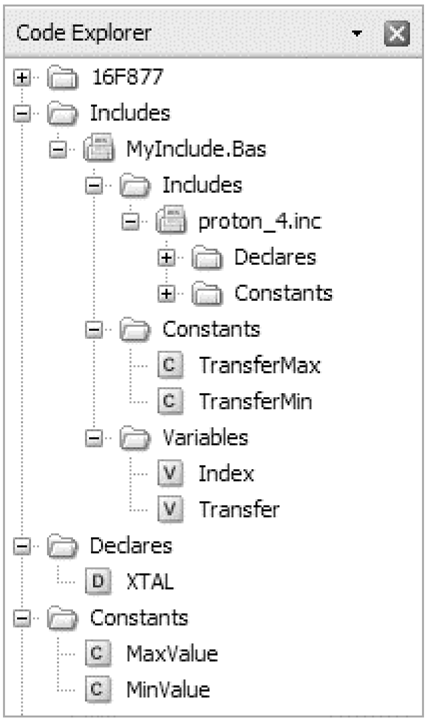

In the above example, clicking on the ⊞ icon for MyInclude.bas has expanded the node to reveal its contents. You can now see that MyInclude.bas has two constant declarations called TransferMax and TransferMin and also two variables called Index and Transfer. The include file also contains another include file called proton_4.inc. Again, by clicking the ⊞ icon, the contents of proton_4.inc can be seen, without opening the file. Clicking on a declaration name will open the include file and automatically jump to the line number. For example, if you were to click on TransferMax, the include file MyInclude.bas would be opened and the declaration TransferMax would be marked in the IDE editor window.

When using the code explorer with include files, you can use the explorer history buttons to go backwards or forwards. The explorer history buttons are normally located to the left of the main editors file select tabs,

◀ History back button
▶ History forward button

Additional Nodes
Declares, constants, variables, alias and modifiers, labels, macros and data label explorer nodes work in much the same way. Clicking on any of these nodes will take you to its declaration. If you want to find the next occurrence of a declaration, you should enable automatically select variable on code explorer click from VIEW...EDITOR OPTIONS.

Selecting this option will load the search name into the 'find dialog' search buffer. You then just need to press F3 to search for the next occurrence of the declaration in your program.
To sort the explorer nodes, right click on the code explorer and check the Sort Nodes option.

Explorer Warnings and Errors
The code explorer can identify duplicate declarations. If a declaration duplicate is found, the explorer node icon changes from its default state to a ☒. For example,

DIM MyVar **AS BYTE**
DIM MyVar **AS BYTE**

The above example is rather simplistic. It is more likely you see the duplicate declaration error in you program without an obvious duplicate partner. That is, only one single duplicate error symbol is being displayed in the code explorer. In this case, the declaration will have a duplicate contained in an include file. For example,

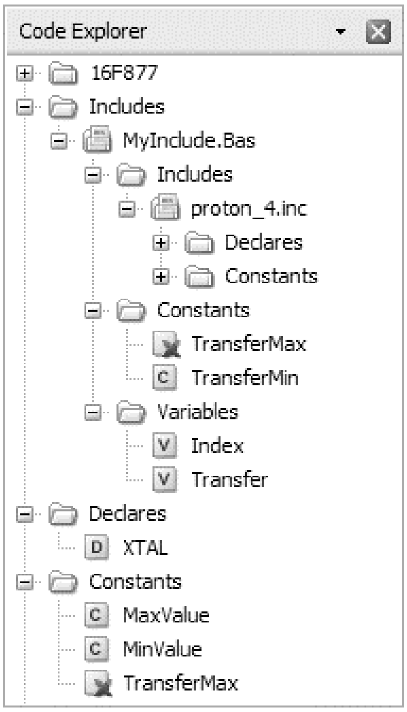
Code Explorer
16F877
Includes
MyInclude.Bas
Includes
proton_4.inc
Declares
Constants
Constants
TransferMax
C TransferMin
Variables
V Index
V Transfer
Declares
D XTAL
Constants
C MaxValue
C MinValue
TransferMax

The declaration TransferMax has been made in the main program and marked as a duplicate. By exploring your include files, the problem can be identified. In this example, TransferMax has already been declared in the include file MyInclude.bas

Some features of the compiler of not available for some MCU types. For example, you cannot have a string declaration when using a 14 core part (for example, the 16F877). If you try to do this, the explorer node icon changes from its default state and displays a V. You will also see this icon displayed if the SFR View feature for a device is not available.

Notes

The code explorer uses an optimised parse and pattern match strategy in order to update the tree in real time. The explorer process is threaded so as not to interfere or slow down other IDE tasks, such as typing in new code. However, if you run computationally expensive background tasks on your machine (for example, circuit simulation) you will notice a drop in update performance, due to the threaded nature of the code explorer.

Results View

The results view performs two main tasks. These are (a) display a list of error messages, should either compilation or assembly fail and (b) provide a summary on compilation success.

Compilation Success View

By default, a successful compile will display the results success view. This provides information about the device used, the amount of code and data used, the version number of the project and also date and time.

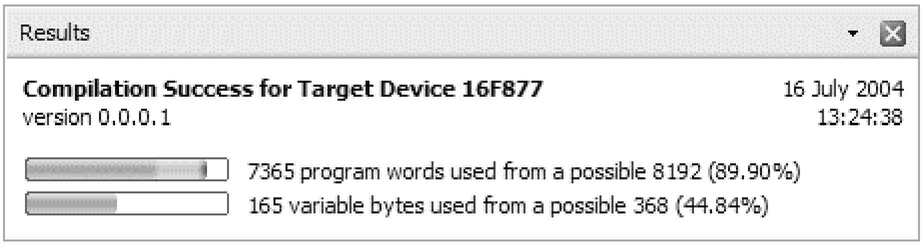

Results

Compilation Success for Target Device 16F877 16 July 2004
version 0.0.0.1 13:24:38

7365 program words used from a possible 8192 (89.90%)
165 variable bytes used from a possible 368 (44.84%)

If you don't want to see full summary information after a successful compile, select VIEW...EDITOR OPTIONS from the IDE main menu and uncheck display full summary after successful compile. The number of program words (or bytes used, if its a 16 core device) and the number of data bytes used will still be displayed in the IDE status bar.

Version Numbers

The version number is automatically incremented after a successful build. Version numbers are displayed as major, minor, release and build. Each number will rollover if it reaches 256. For example, if your version number is 1.0.0.255 and you compile again, the number displayed will be 1.0.1.0. You might want to start you version information at a particular number. For example 1.0.0.0. To do this, click on the version number in the results window to invoke the version information dialog. You can then set the version number to any start value. Automatic incrementing will then start from the number you have specified. To disable version numbering, click on the version number in the results window to invoke the version information dialog and then uncheck enable version information.

Date and Time

Date and time information is extracted from the generated *.hex file and is always displayed in the results view.

Success - With Warnings!

A compile is considered successful if it generates a *.hex file. However, you may have generated a number of warning messages during compilation. Because you should not normally ignore warning messages, the IDE will always display the error view, rather than the success view, if warnings have been generated.

To toggle between these different views, you can do one of the following click anywhere on the IDE status bar right click on the results window and select the Toggle View option.

Compilation Error View
If your program generates warning or error messages, the error view is always displayed.

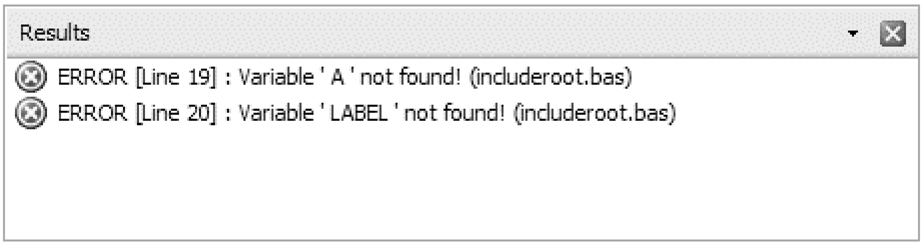

ERROR [Line 19] : Variable ' A ' not found! (includeroot.bas)
ERROR [Line 20] : Variable ' LABEL ' not found! (includeroot.bas)

Clicking on each error or warning message will automatically highlight the offending line in the main editor window. If the error or warning has occurred in an include file, the file will be opened and the line highlighted. By default, the IDE will automatically highlight the first error line found. To disable this feature, select VIEW...EDITOR OPTIONS from the IDE main menu and uncheck automatically jump to first compilation error. At the time of writing, some compiler errors do not have line numbers bound to them. Under these circumstances, Proton IDE will be unable to automatically jump to the selected line.

Occasionally, the compiler will generate a valid ASM file but warnings or errors are generated during assembly. Proton IDE will display all assembler warnings or error messages in the error view, but you will be unable to automatically jump to a selected line.

Editor Options

The editor options dialog enables you to configure and control many of the Proton IDE features. The window is composed of four main areas, which are accessed by selecting the General, Highlighter, Program Header and Online Updating tabs.

Show Line Numbers in Left Gutter
Display line numbers in the editors left hand side gutter. If enabled, the gutter width is increased in size to accommodate a five digit line number.

Show Right Gutter
Displays a line to the right of the main editor. You can also set the distance from the left margin (in characters). This feature can be useful for aligning your program comments.

Use Smart Tabs
Normally, pressing the tab key will advance the cursor by a set number of characters. With smart tabs enabled, the cursor will move to a position along the current line which depends on the text on the previous line. Can be useful for aligning code blocks.

Convert Tabs to Spaces
When the tab key is pressed, the editor will normally insert a tab control character, whose size will depend on the value shown in the width edit box (the default is four spaces). If you then press the backspace key, the whole tab is deleted (that is, the cursor will move back four spaces). If convert tabs to spaces is enabled, the tab control character is replaced by the space control character (multiplied by the number shown in the width edit box). Pressing the backspace key will therefore only move the cursor back by one space. Please note that internally, the editor does not use hard tabs, even if convert tabs to spaces is unchecked.

Automatically Indent
When the carriage return key is pressed in the editor window, automatically indent will advance the cursor to a position just below the first word occurrence of the previous line. When this feature is unchecked, the cursor just moves to the beginning of the next line.

Show Parameter Hints
If this option is enabled, small prompts are displayed in the main editor window when a particular compiler keyword is recognised. For example,

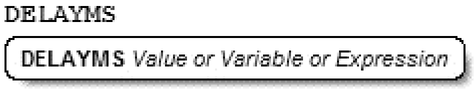

DELAYMS

DELAYMS *Value or Variable or Expression*

Parameter hints are automatically hidden when the first parameter character is typed. To view the hint again, press F1. If you want to view more detailed context sensitive help, press F1 again.

Open Last File(s) When Application Starts
When checked, the documents that were open when Proton IDE was closed are automatically loaded again when the application is restarted.

Display Full Filename Path in Application Title Bar
By default, Proton IDE only displays the document filename in the main application title bar (that is, no path information is includes). Check display full pathname if you would like to display additional path information in the main title bar.

Prompt if File Reload Needed
Proton IDE automatically checks to see if a file time stamp has changed. If it has (for example, and external program has modified the source code) then a dialog box is displayed asking if the file should be reloaded. If prompt on file reload is unchecked, the file is automatically reloaded without any prompting.

Automatically Select Variable on Code Explorer Click
By default, clicking on a link in the code explorer window will take you to the part of your program where a declaration has been made. Selecting this option will load the search name into the 'find dialog' search buffer. You then just need to press F3 to search for the next occurrence of the declaration in your program.

Automatically Jump to First Compilation Error
When this is enabled, Proton IDE will automatically jump to the first error line, assuming any errors are generated during compilation.

Automatically Change Identifiers to Match Declaration
When checked, this option will automatically change the identifier being typed to match that of the actual declaration. For example, if you have the following declaration,

DIM MyIndex **AS BYTE**

and you type 'myindex' in the editor window, Proton IDE will automatically change 'myindex' to 'MyIndex'. Identifiers are automatically changed to match the declaration even if the declaration is made in an include file.

Please note that the actual text is not physically changed, it just changes the way it is displayed in the editor window. For example, if you save the above example and load it into wordpad or another text editor, it will still show as 'myindex'. If you print the document, the identifier will be shown as 'MyIndex'. If you copy and paste into another document, the identifier will be shown as 'MyIndex', if the target application supports formatted text (for example Microsoft Word).
In short, this feature is very useful for printing, copying and making you programs look consistent throughout.

Clear Undo History After Successful Compile

If checked, a successful compilation will clear the undo history buffer. A history buffer takes up system resources, especially if many documents are open at the same time. It's a good idea to have this feature enabled if you plan to work on many documents at the same time.

Display Full Summary After Successful Compile

If checked, a successful compilation will display a full summary in the results window. Disabling this option will still give a short summary in the IDE status bar, but the results window will not be displayed.

Default Source Folder

Proton IDE will automatically go to this folder when you invoke the file open or save as dialogs. To disable this feature, uncheck the 'Enabled' option, shown directly below the default source folder.

Highlighter Options

Item Properties

The syntax highlighter tab lets you change the colour and attributes (for example, bold and italic) of the following items: -

Comment
Device Name
Identifier
Keyword (ASM)
Keyword (Declare)
Keyword (Important)
Keyword (Macro Parameter)
Keyword (Proton)
Keyword (User)
Number
Number (Binary)
Number (Hex)
SFR
SFR (Bitname)
String
Symbol

The point size is ranged between 6pt to 16pt and is global. That is, you cannot have different point sizes for individual items.

Reserved Word Formatting

This option enables you to set how Proton IDE displays keywords. Options include: -

Database Default - the IDE will display the keyword as declared in the applications keyword database.

Uppercase - the IDE will display the keyword in uppercase.

Lowercase - the IDE will display the keyword in lowercase.

As Typed - the IDE will display the keyword as you have typed it.

Please note that the actual keyword text is not physically changed, it just changes the way it is displayed in the editor window. For example, if you save your document and load it into wordpad or another text editor, the keyword text will be displayed as you typed it. If you print the document, the keyword will be formatted. If you copy and paste into another document, the keyword will be formatted, if the target application supports formatted text (for example Microsoft Word).

Header options allows you to change the author and copyright name that is placed in a header when a new document is created. For example: -

```
'****************************************************************
'* Name    : UNTITLED.BAS                                      *
'* Author  : David John Barker                                 *
'* Notice  : Copyright (c) 2001 Mecanique                      *
'*         : All Rights Reserved                               *
'* Date    : 10/15/01                                          *
'* Version : 1.0                                               *
'* Notes   :                                                   *
'*         :                                                   *
'****************************************************************
```

If you do not want to use this feature, simply deselect the enable check box.

On Line Updating

Dial Up Connection

Checking the 'Dial Up Connection' option will force the Proton IDE to automatically check for updates every time you start the software. It will only do this if you are currently connected to the internet. Proton IDE will not start dialling up your ISP every time you start the program!

LAN or Broadband Connection

Checking the 'LAN or Broadband Connection' option will force Proton IDE to automatically check for updates every time you start the software. This option assumes you have a permanent connection to the internet.

Manual Connection

Checking this option means Proton IDE will never check for online updates, unless requested to do so from the main menu.

Compile and Program Options

Compiler Tab

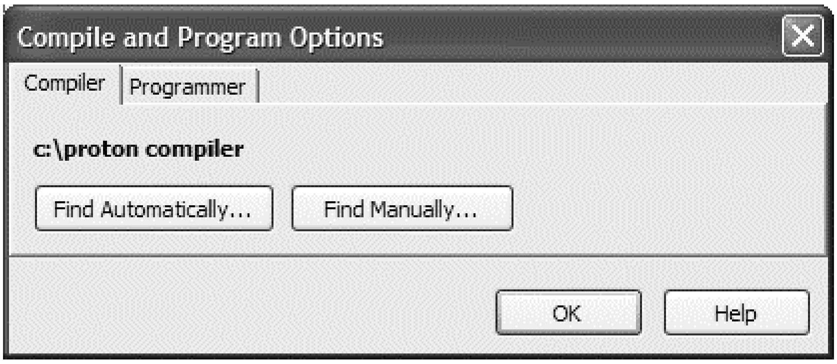
Compile and Program Options
Compiler
Programmer
Find Automatically...
Find Manually...
OK
Help

c:\proton compiler

You can get the Proton IDE to locate a compiler directory automatically by clicking on the find automatically button. The auto-search feature will stop when a compiler is found.

Alternatively, you can select the directory manually by selecting the find manually button. The auto-search feature will search for a compiler and if one is found, the search is stopped and the path pointing to the compiler is updated. If you have multiple versions of a compiler installed on your system, use the find manually button. This ensures the correct compiler is used by the IDE.

Programmer Tab

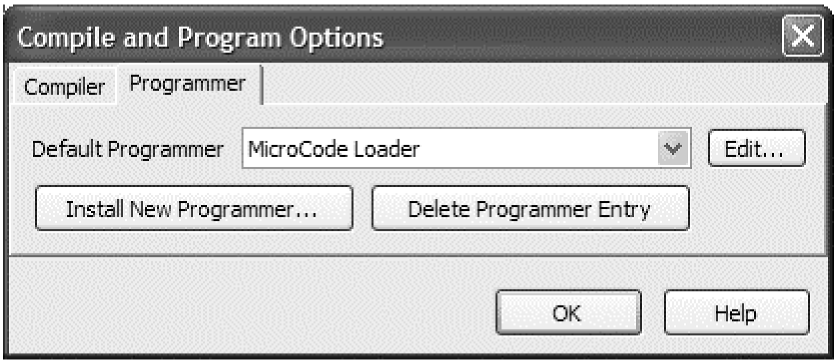
Compile and Program Options
Compiler
Programmer
Edit...
Install New Programmer...
Delete Programmer Entry
OK
Help

Default Programmer: MicroCode Loader

Use the programmer tab to install a new programmer, delete a programmer entry or edit the currently selected programmer. Pressing the Install New Programmer button will invoke the install new programmer wizard. The Edit button will invoke the install new programmer wizard in custom configuration mode.

Installing a Programmer

The Proton IDE enables you to start your preferred programming software from within the development environment . This enables you to compile and then program your microcontroller with just a few mouse clicks (or keyboard strokes, if you prefer). The first thing you need to do is tell Proton IDE which programmer you are using. Select VIEW...OPTIONS from the main menu bar, then select the PROGRAMMER tab. Next, select the Add New Programmer button. This will open the install new programmer wizard.

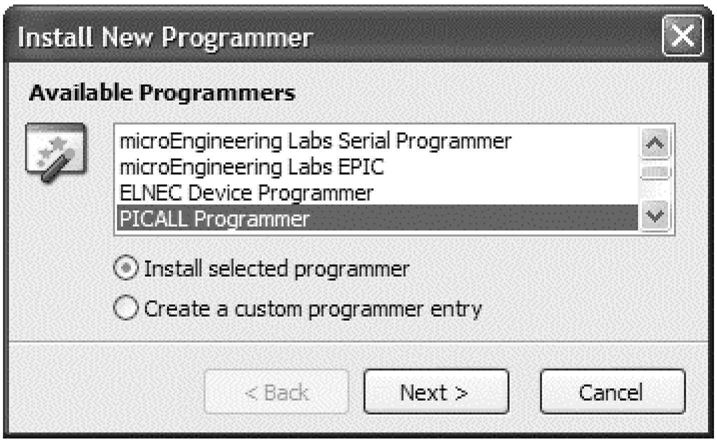
Install New Programmer
Available Programmers
microEngineering Labs Serial Programmer
microEngineering Labs EPIC
ELNEC Device Programmer
PICALL Programmer
● Install selected programmer
○ Create a custom programmer entry
< Back
Next >
Cancel

Select the programmer you want Proton IDE to use, then choose the Next button. Proton IDE will now search your computer until it locates the required executable. If your programmer is not in the list, you will need to create a custom programmer entry.

Your programmer is now ready for use. When you press the Compile and Program button on the main toolbar, you program is compiled and the programmer software started. The *.hex filename and target device is automatically set in the programming software (if this feature is supported), ready for you to program your microcontroller.

You can select a different programmer, or install another programmer, by pressing the small down arrow, located to the right of the compile and program button, as shown below

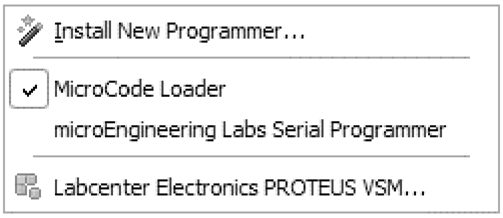
Install New Programmer...
✓ MicroCode Loader
microEngineering Labs Serial Programmer
Labcenter Electronics PROTEUS VSM...

Creating a custom Programmer Entry

In most cases, Proton IDE has a set of pre-configured programmers available for use. However, if you use a programmer not included in this list, you will need to add a custom programmer entry. Select VIEW...OPTIONS from the main menu bar, then select the PROGRAMMER tab. Next, select the Add New Programmer button. This will open the install new programmer wizard. You then need to select 'create a custom programmer entry', as shown below

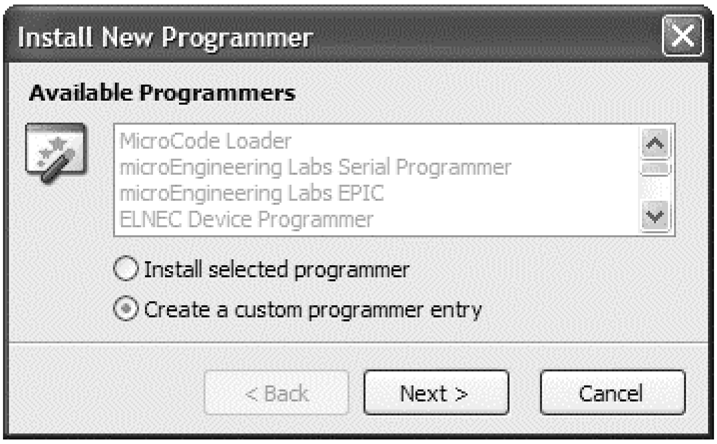

Available Programmers

MicroCode Loader
microEngineering Labs Serial Programmer
microEngineering Labs EPIC
ELNEC Device Programmer

○ Install selected programmer
● Create a custom programmer entry

Select Display Name

The next screen asks you to enter the display name. This is the name that will be displayed in any programmer related drop down boxes. Proton IDE enables you to add and configure multiple programmers. You can easily switch from different types of programmer from the compile and program button, located on the main editor toolbar. The multiple programmer feature means you do not have to keep reconfiguring your system when you switch programmers. Proton IDE will remember the settings for you. In the example below, the display name will be 'My New Programmer'.

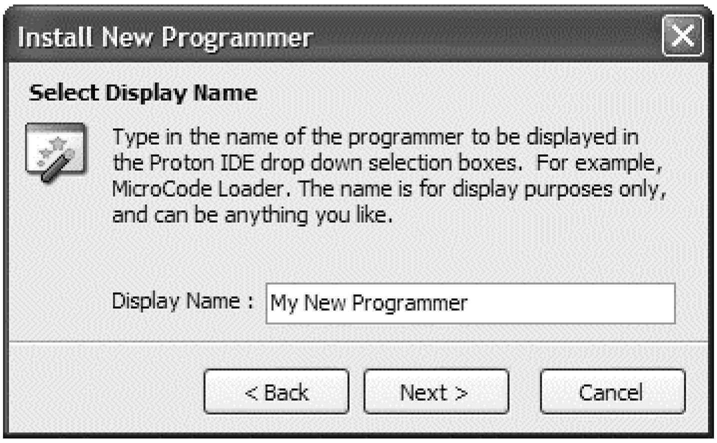

Select Display Name

Type in the name of the programmer to be displayed in the Proton IDE drop down selection boxes. For example, MicroCode Loader. The name is for display purposes only, and can be anything you like.

Display Name : My New Programmer

Select Programmer Executable

The next screen asks for the programmer executable name. You do not have to give the full path, just the name of the executable name will do.

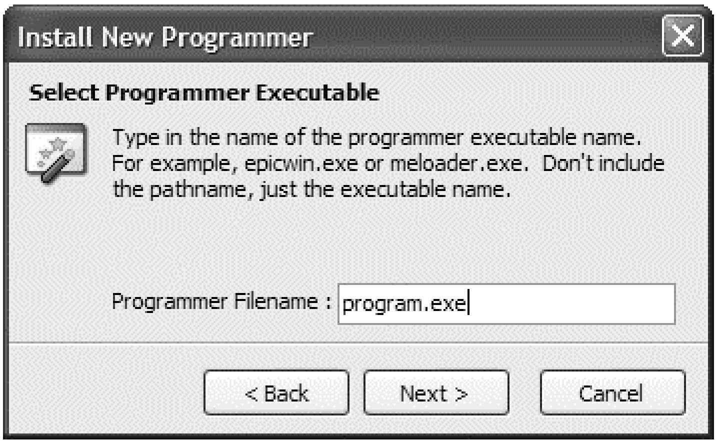
Install New Programmer
Select Programmer Executable
< Back
Next >
Cancel

Type in the name of the programmer executable name. For example, epicwin.exe or meloader.exe. Don't include the pathname, just the executable name.

Programmer Filename : program.exe

Select Programmer Path

The next screen is the path to the programmer executable. You can let Proton IDE find it automatically, or you can select it manually.

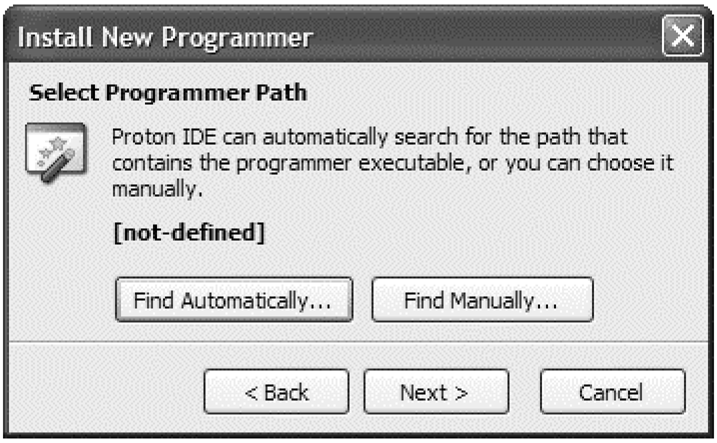
Install New Programmer
Select Programmer Path
Find Automatically...
Find Manually...
< Back
Next >
Cancel

Proton IDE can automatically search for the path that contains the programmer executable, or you can choose it manually.

[not-defined]

Select Parameters

The final screen is used to set the parameters that will be passed to your programmer. Some programmers, for example, EPICWin^{tm} allows you to pass the device name and hex filename. Proton IDE enables you to 'bind' the currently selected device and *.hex file you are working on.

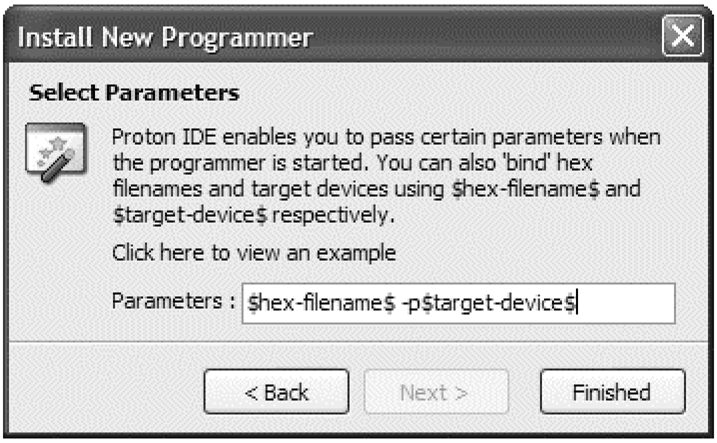
Install New Programmer
Select Parameters
< Back
Next >
Finished

Proton IDE enables you to pass certain parameters when the programmer is started. You can also 'bind' hex filenames and target devices using $hex-filename$ and $target-device$ respectively.

Click here to view an example

Parameters : $hex-filename$ -p$target-device$

For example, if you are compiling 'blink.bas' in the Proton IDE using a 16F628, you would want to pass the 'blink.hex' file to the programmer and also the name of the microcontroller you intend to program. Here is the EPICWin^{tm} example: -

```
-pPIC$target-device$ $hex-filename$
```

When EPICWin^{tm} is started, the device name and hex filename are 'bound' to $target-device$ and $hex-filename$ respectively. In the 'blink.bas' example, the actual parameter passed to the programmer would be: -

```
-pPIC16F628 blink.hex
```

Parameter Summary

Parameter	**Description**
$target-device$	Microcontroller name
$hex-filename$	HEX filename and path, DOS 8.3 format
$long-hex-filename$	HEX filename and path
$asm-filename$	ASM filename and path, DOS 8.3 format
$long-asm-filename$	ASM filename and path

Microcode Loader

The PIC16F87x(A), 16F8x and PIC18Fxxx(x) series of microcontrollers have the ability to write to their own program memory, without the need of a hardware programmer. A small piece of software called a bootloader resides on the target microcontroller, which allows user code and EEPROM data to be transmitted over a serial cable and written to the device. The MicroCode Loader application is the software which resides on the computer. Together, these two components enable a user to program, verify and read their program and EEPROM data all in circuit.

When power is first applied to the microcontroller (or it is reset), the bootloader first checks to see if the MicroCode Loader application has something for it to do (for example, program your code into the target device). If it does, the bootloader gives control to MicroCode Loader until it is told to exit. However, if the bootloader does not receive any instructions with the first few hundred milliseconds of starting, the bootloader will exit and the code previously written to the target device will start to execute.

The bootloader software resides in the upper 256 words of program memory (336 words for 18Fxxx devices), with the rest of the microcontroller code space being available for your program. All EEPROM data memory and microcontroller registers are available for use by your program. Please note that only the program code space and EEPROM data space may be programmed, verified and read by MicroCode Loader. The microcontroller ID location and configuration fuses are not available to the loader process. Configuration fuses must therefore be set at the time the bootloader software is programmed into the target microcontroller.

Hardware Requirements

MicroCode Loader communicates with the target microcontroller using its hardware Universal Synchronous Asynchronous Receiver Transmitter (USART). You will therefore need a development board that supports RS232 serial communication in order to use the loader. There are many boards available which support RS232.

Whatever board you have, if the board has a 9 pin serial connector on it, the chances are it will have a MAX232 or equivalent located on the board. This is ideal for MicroCode Loader to communicate with the target device using a serial cable connected to your computer. Alternatively, you can use the following circuit and build your own.

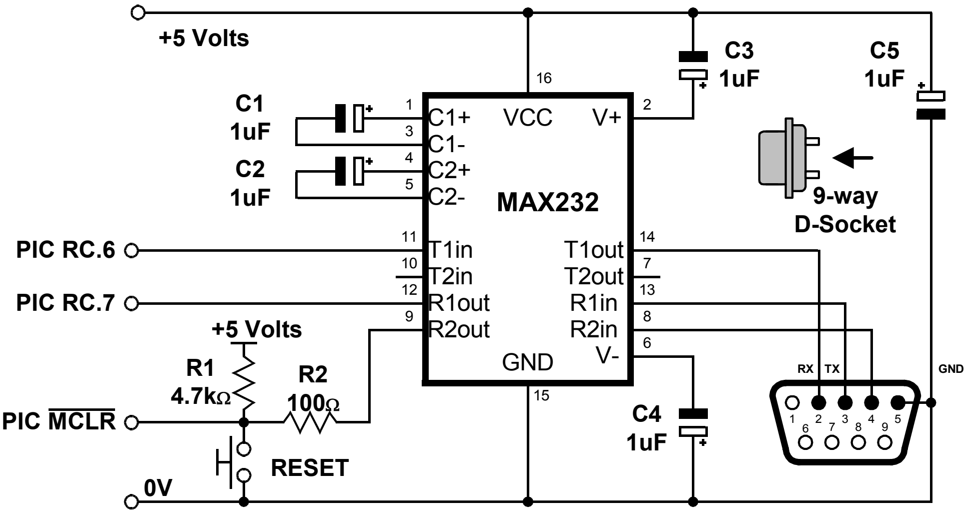

MicroCode Loader supports the following devices: -

16F870, 16F871, 16F873(A), 16F874(A), 16F876(A), 16F877(A), 16F87, 16F88, 18F242, 18F248, 18F252, 18F258, 18F442, 18F448, 18F452, 18F458, 18F1220, 18F1320, 18F2220, 18F2320, 18F4220, 18F4320, 18F6620, 18F6720, 18F8620 and 18F8720.

The LITE version of MicroCode Loader supports the following devices: 16F876, 16F877, 18F242 and 18F252.

MicroCode Loader comes with a number of pre-compiled *.hex files, ready for programming into the target microcontroller. If you require a bootloader file with a different configuration, please contact Mecanique.

Using the MicroCode Loader is very easy. Before using this guide make sure that your target microcontroller is supported by the loader and that you also have suitable hardware.

Programming the Loader Firmware

Before using MicroCode Loader, you need to ensure that the bootloader firmware has been programmed onto the target microcontroller using a hardware programmer. This is a one off operation, after which you can start programming your target device over a serial connection. Alternatively, you can purchase pre-programmed microcontrollers from Mecanique. You need to make sure that the bootloader *.hex file matches the clock speed of your target microcontroller. For example, if you are using a 18F877 on a development board running at 20 MHz, then you need to use the firmware file called 16F877_20.hex. If you don't do this, MicroCode Loader will be unable to communicate with the target microcontroller. MicroCode Loader comes with a number of pre-compiled *.hex files, ready for programming into the target microcontroller. If you require additional bootloader files, please contact Mecanique. The loader firmware files can be found in the MCLoader folder, located in your main IDE installation folder. Default fuse settings are embedded in the firmware *.hex file. You should not normally change these default settings. You should certainly never select the code protect fuse. If the code protect fuse is set, MicroCode Loader will be unable to program your *.hex file.

Configuring the Loader

Assuming you now have the firmware installed on your microcontroller, you now just need to tell MicroCode Loader which COM port you are going to use. To do this, select VIEW...LOADER from the MicroCode IDE main menu. Select the COM port from the MicroCode Loader main toolbar. Finally, make sure that MicroCode Loader is set as your default programmer.

Click on the down arrow, to the right of the Compile and Program button. Check the MicroCode Loader option, like this: -

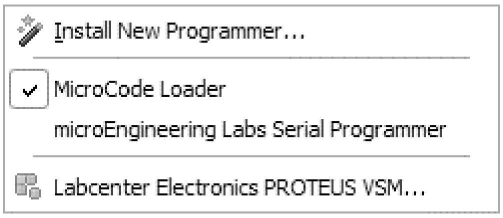
Install New Programmer...
☑ MicroCode Loader
microEngineering Labs Serial Programmer
Labcenter Electronics PROTEUS VSM...

Using MicroCode Loader
Connect a serial cable between your computer and development board. Apply power to the board.

Press 'Compile and Program' or F10 to compile your program. If there are no compilation errors, the MicroCode Loader application will start. It may ask you to reset the development board in order to establish communications with the resident microcontroller bootloader. This is perfectly normal for development boards that do not implement a software reset circuit. If required, press reset to establish communications and program you microcontroller.

Loader Options

Loader options can be set by selecting the OPTIONS menu item, located on the main menu bar.

Program Code
Optionally program user code when writing to the target microcontroller. Uncheck this option to prevent user code from being programmed. The default is ON.

Program Data
Optionally program EEPROM data when writing to the target microcontroller. Uncheck this option to prevent EEPROM data from being programmed. The default is ON.

Verify Code When Programming
Optionally verify a code write operation when programming. Uncheck this option to prevent user code from being verified when programming. The default is ON.

Verify Data When Programming
Optionally verify a data write operation when programming. Uncheck this option to prevent user data from being verified when programming. The default is ON.

Verify Code
Optionally verify user code when verifying the loaded *.hex file. Uncheck this option to prevent user code from being verified. The default is ON.

Verify Data
Optionally verify EEPROM data when verifying the loaded *.hex file. Uncheck this option to prevent EEPROM data from being verified. The default is ON.

Verify After Programming
Performs an additional verification operation immediately after the target microcontroller has been programmed. The default is OFF.

Run User Code After Programming
Exit the bootloader process immediately after programming and then start running the target user code. The default is ON.

Load File Before Programming
Optionally load the latest version of the *.hex file immediately before programming the target microcontroller. The default is OFF.

Baud Rate
Select the speed at which the computer communicates with the target microcontroller. By default, the Auto Detect option is enabled. This feature enables MicroCode Loader to determine the speed of the target microcontroller and set the best communication speed for that device.

If you select one of the baud rates manually, it must match the baud rate of the loader software programmed onto the target microcontroller. For devices running at less that 20MHz, this is 19200 baud. For devices running at 20MHz, you can select either 19200 or 115200 baud.

Loader Main Toolbar

Open Hex File
The open button loads a *.hex file ready for programming.

Program
The program button will program the loaded hex file code and EEPROM data into the target microcontroller. When programming the target device, a verification is normally done to ensure the integrity of the programmed user code and EEPROM data. You can override this feature by un-checking either Verify Code When Programming or Verify Data When Programming. You can also optionally verify the complete *.hex file after programming by selecting the Verify After Programming option.

Pressing the program button will normally program the currently loaded *.hex file. However, you can load the latest version of the *.hex file immediately before programming by checking Load File Before Programming option. You can also set the loader to start running the user code immediately after programming by checking the Run User Code After Programming option. When programming the target device, both user code and EEPROM data are programmed by default (recommended). However, you may want to just program code or EEPROM data. To change the default configuration, use the Program Code and Program Data options.

Should any problems arise when programming the target device, a dialog window will be displayed giving additional details. If no problems are encountered when programming the device, the status window will close at the end of the write sequence.

Read
The read button will read the current code and EEPROM data from the target microcontroller.
Should any problems arise when reading the target device, a dialog window will be displayed giving additional details. If no problems are encountered when reading the device, the status window will close at the end of the read sequence.

Verify

The verify button will compare the currently loaded *.hex file code and EEPROM data with the code and EEPROM data located on the target microcontroller. When verifying the target device, both user code and EEPROM data are verified by default. However, you may want to just verify code or EEPROM data. To change the default configuration, use the Verify Code and Verify Data options.

Should any problems arise when verifying the target device, a dialog window will be displayed giving additional details. If no problems are encountered when verifying the device, the status window will close at the end of the verification sequence.

Erase

The erase button will erase all of the code memory on a PIC 16F8x and PIC18Fxxx(x) microcontroller.

Run User Code

The run user code button will cause the bootloader process to exit and then start running the program loaded on the target microcontroller.

Loader Information

The loader information button displays the loader firmware version and the name of the target micro-controller, for example PIC16F877.

Loader Serial Port

The loader serial port drop down box allows you to select the com port used to communicate with the target microcontroller.

IDE Plugins

The Proton IDE has been designed with flexibility in mind. Plugins enable the functionality of the IDE to be extended by through additional third party software, which can be integrated into the development environment. Proton IDE comes with a default set of plugins which you can use straight away. These are: -

ASCII Table
Assembler
HEX View
Serial Communicator
Labcenter Electronics PROTEUS VSM

To access a plugin, select the plugin icon just above the main editor window. A drop down list of available plugins will then be displayed. Plugins can also be selected from the main menu, or by right clicking on the main editor window.

Plugin Developer Notes

The plugin architecture has been designed to make writing third party plugins very easy, using the development environment of your choice (for example Visual BASIC, C++ or Borland Delphi). This architecture is currently evolving and is therefore publicly undocumented until all of the protocols have been finalised. As soon as the protocol details have been finalised, this documentation will be made public. For more information, please feel free to contact us.

ASCII Table

The American Standard Code for Information Interchange (ASCII) is a set of numerical codes, with each code representing a single character, for example, 'a' or '$'.

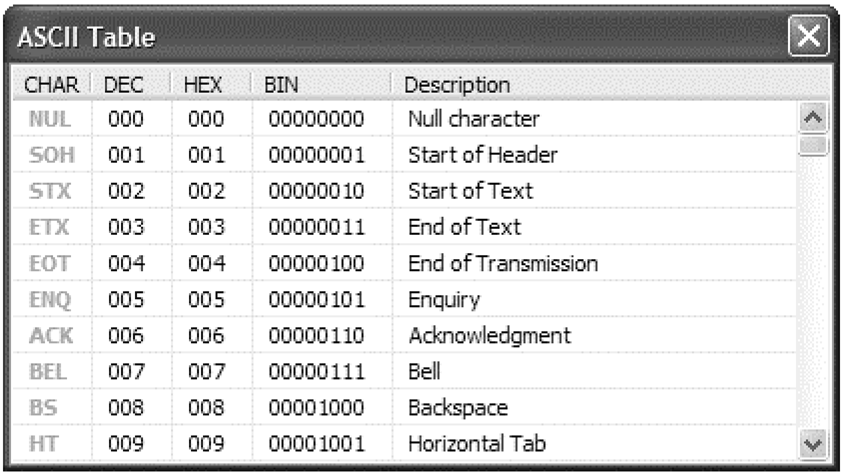

CHAR	DEC	HEX	BIN	Description
NUL	000	000	00000000	Null character
SOH	001	001	00000001	Start of Header
STX	002	002	00000010	Start of Text
ETX	003	003	00000011	End of Text
EOT	004	004	00000100	End of Transmission
ENQ	005	005	00000101	Enquiry
ACK	006	006	00000110	Acknowledgment
BEL	007	007	00000111	Bell
BS	008	008	00001000	Backspace
HT	009	009	00001001	Horizontal Tab

The ASCII table plugin enables you to view these codes in either decimal, hexadecimal or binary. The first 32 codes (0..31) are often referred to as non-printing characters, and are displayed as grey text.

HEX View

The HEX view plugin enables you to view program code and EEPROM data for 14 and 16 core devices.

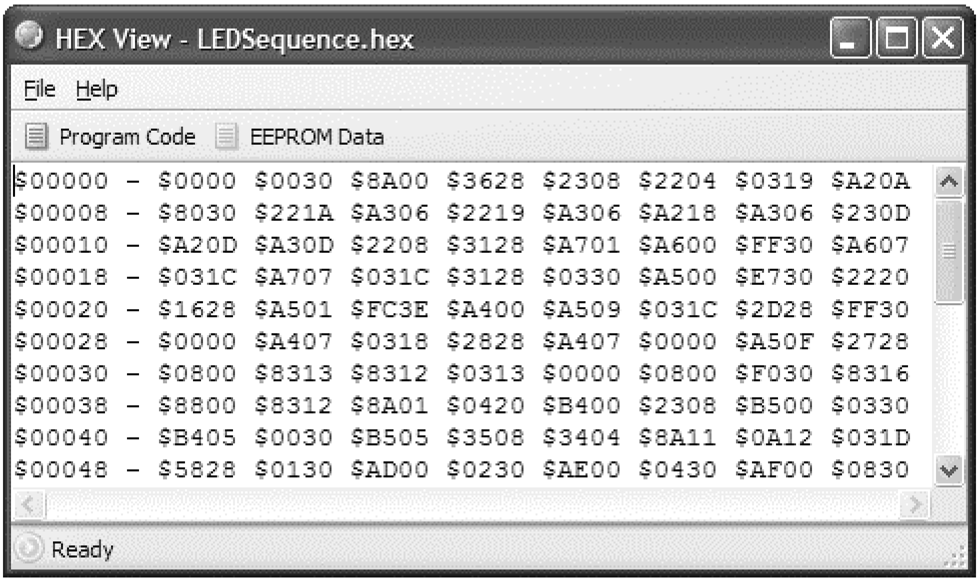

```
$00000 - $0000 $0030 $8A00 $3628 $2308 $2204 $0319 $A20A
$00008 - $8030 $221A $A306 $2219 $A306 $A218 $A306 $230D
$00010 - $A20D $A30D $2208 $3128 $A701 $A600 $FF30 $A607
$00018 - $031C $A707 $031C $3128 $0330 $A500 $E730 $2220
$00020 - $1628 $A501 $FC3E $A400 $A509 $031C $2D28 $FF30
$00028 - $0000 $A407 $0318 $2828 $A407 $0000 $A50F $2728
$00030 - $0800 $8313 $8312 $0313 $0000 $0800 $F030 $8316
$00038 - $8800 $8312 $8A01 $0420 $B400 $2308 $B500 $0330
$00040 - $B405 $0030 $B505 $3508 $3404 $8A11 $0A12 $031D
$00048 - $5828 $0130 $AD00 $0230 $AE00 $0430 $AF00 $0830
```

The HEX View window is automatically updated after a successful compile, or if you switch program tabs in the IDE. By default, the HEX view window remains on top of the main IDE window. To disable this feature, right click on the HEX View window and uncheck the Stay on Top option.

Assembler Window

The Assembler plugin allows you to view and modify the *.asm file generated by the compiler. Using the Assembler window to modify the generated *.asm file is not really recommended, unless you have some experience using assembler.

Assembler Menu Bar

File Menu

New - Creates a new document. A header is automatically generated, showing information such as author, copyright and date.

- **Open** - Displays a open dialog box, enabling you to load a document into the Assembler plugin. If the document is already open, then the document is made the active editor page.

- **Save** - Saves a document to disk. This button is normally disabled unless the document has been changed. If the document is 'untitled', a save as dialog is invoked. A save as dialog is also invoked if the document you are trying to save is marked as read only.

- **Save As** - Displays a save as dialog, enabling you to name and save a document to disk.

- **Close** - Closes the currently active document.

- **Close All** - Closes all editor documents and then creates a new editor document.

- **Reopen** - Displays a list of Most Recently Used (MRU) documents.

- **Print Setup** - Displays a print setup dialog.

- **Print** - Prints the currently active editor page.

- **Exit** - Enables you to exit the Assembler plugin.

Edit Menu

- **Undo** - Cancels any changes made to the currently active document page.

- **Redo** - Reverse an undo command.

- **Cut** - Cuts any selected text from the active document page and places it into the clipboard.

- **Copy** - Copies any selected text from the active document page and places it into the clipboard.

- **Paste** - Paste the contents of the clipboard into the active document page. This option is disabled if the clipboard does not contain any suitable text.

- **Delete** - Deletes any selected text. This option is disabled if no text has been selected.

- **Select All** - Selects the entire text in the active document page.

- **Find** - Displays a find dialog.

- **Replace** - Displays a find and replace dialog.

- **Find Next** - Automatically searches for the next occurrence of a word. If no search word has been selected, then the word at the current cursor position is used. You can also select a whole phrase to be used as a search term. If the editor is still unable to identify a search word, a find dialog is displayed.

View Menu

- **Options** - Displays the application editor options dialog.

- **Toolbars** - Display or hide the main and assemble and program toolbars. You can also toggle the toolbar icon size.

Help Menu

- **Help Topics** - Displays the IDE help file.

- **About** - Display about dialog, giving the Assembler plugin version number.

Assembler Main Toolbar

New

Creates a new document. A header is automatically generated, showing information such as author, copyright and date.

Open

Displays a open dialog box, enabling you to load a document into the Assembler plugin. If the document is already open, then the document is made the active editor page.

Save

Saves a document to disk. This button is normally disabled unless the document has been changed. If the document is 'untitled', a save as dialog is invoked. A save as dialog is also invoked if the document you are trying to save is marked as read only.

Cut

Cuts any selected text from the active document page and places it into the clipboard. This option is disabled if no text has been selected.

Copy

Copies any selected text from the active document page and places it into the clipboard. This option is disabled if no text has been selected.

Paste

Paste the contents of the clipboard into the active document page. This option is disabled if the clipboard does not contain any suitable text.

Undo

Cancels any changes made to the currently active document page.

Redo

Reverse an undo command.

Assemble and Program Toolbar

Assemble

Pressing this button, or F9, will compile the currently active editor page. The compile button will generate a *.hex file, which you then have to manually program into your microcontroller. Pressing the assemble button will automatically save all open files to disk.

Assemble and Program

Pressing this button, or F10, will compile the currently active editor page. Pressing the assemble and program button will automatically save all open files to disk.
Unlike the assemble button, the Assembler plugin will then automatically invoke a user selectable application and pass the assembler output to it. The target application is normally a device programmer, for example, MicroCode Loader. This enables you to program the generated *.hex file into your MCU.

Assembler Editor Options

Show Line Numbers in Left Gutter

Display line numbers in the editors left hand side gutter. If enabled, the gutter width is increased in size to accommodate a five digit line number.

Show Right Gutter

Displays a line to the right of the main editor. You can also set the distance from the left margin (in characters). This feature can be useful for aligning your program comments.

Use Smart Tabs

Normally, pressing the tab key will advance the cursor by a set number of characters. With smart tabs enabled, the cursor will move to a position along the current line which depends on the text on the previous line. Can be useful for aligning code blocks.

Convert Tabs to Spaces

When the tab key is pressed, the editor will normally insert a tab control character, whose size will depend on the value shown in the width edit box (the default is four spaces). If you then press the backspace key, the whole tab is deleted (that is, the cursor will move back four spaces). If convert tabs to spaces is enabled, the tab control character is replaced by the space control character (multiplied by the number shown in the width edit box). Pressing the backspace key will therefore only move the cursor back by one space. Please note that internally, the editor does not use hard tabs, even if convert tabs to spaces is unchecked.

Automatically Indent

When the carriage return key is pressed in the editor window, automatically indent will advance the cursor to a position just below the first word occurrence of the previous line. When this feature is unchecked, the cursor just moves to the beginning of the next line.

Show Parameter Hints

If this option is enabled, small prompts are displayed in the main editor window when a particular compiler keyword is recognised.

Open Last File(s) When Application Starts

When checked, the documents that were open when the Assembler plugin was closed are automatically loaded again when the application is restarted.

Display Full Filename Path in Application Title Bar

By default, the Assembler plugin only displays the document filename in the main application title bar (that is, no path information is included). Check display full pathname if you would like to display additional path information in the main title bar.

Prompt if File Reload Needed

The Assembler plugin automatically checks to see if a file time stamp has changed. If it has (for example, and external program has modified the source code) then a dialog box is displayed asking if the file should be reloaded. If prompt on file reload is unchecked, the file is automatically reloaded without any prompting.

Automatically Jump to First Compilation Error

When this is enabled, the Assembler plugin will automatically jump to the first error line, assuming any errors are generated during compilation.

Clear Undo History After Successful Compile

If checked, a successful compilation will clear the undo history buffer. A history buffer takes up system resources, especially if many documents are open at the same time. It's a good idea to have this feature enabled if you plan to work on many documents at the same time.

Default Source Folder

The Assembler plugin will automatically go to this folder when you invoke the file open or save as dialogs. To disable this feature, uncheck the 'Enabled' option, shown directly below the default source folder.

Serial Communicator

The Serial Communicator plugin is a simple to use utility which enables you to transmit and receive data via a serial cable connected to your PC and development board. The easy to use configuration window allows you to select port number, baudrate, parity, byte size and number of stop bits. Alternatively, you can use Serial Communicator favourites to quickly load pre-configured connection settings.

Menu options

File Menu

- **Clear** - Clears the contents of either the transmit or receive window.
- **Open** - Displays a open dialog box, enabling you to load data into the transmit window.
- **Save As** - Displays a save as dialog, enabling you to name and save the contents of the receive window.
- **Exit** - Enables you to exit the Serial Communicator software.

Edit Menu

- **Undo** - Cancels any changes made to either the transmit or receive window.
- **Cut** - Cuts any selected text from either the transmit or receive window.

- **Copy** - Copies any selected text from either the transmit or receive window.

- **Paste** - Paste the contents of the clipboard into either the transmit or receive window. This option is disabled if the clipboard does not contain any suitable text.

- **Delete** - Deletes any selected text. This option is disabled if no text has been selected.

View Menu

- **Configuration Window** - Display or hide the configuration window.

- **Toolbars** - Display small or large toolbar icons.

Help Menu

- **Help Topics** - Displays the serial communicator help file.

- **About** - Display about dialog, giving software version information.

Serial Communicator Main Toolbar

Clear
Clears the contents of either the transmit or receive window.

Open
Displays a open dialog box, enabling you to load data into the transmit window.

Save As
Displays a save as dialog, enabling you to name and save the contents of the receive window.

Cut
Cuts any selected text from either the transmit or receive window.

Copy
Copies any selected text from either the transmit or receive window.

Paste
Paste the contents of the clipboard into either the transmit or receive window. This option is disabled if the clipboard does not contain any suitable text.

Connect
Connects the Serial Communicator software to an available serial port. Before connecting, you should ensure that your communication options have been configured correctly using the configuration window.

Disconnect
Disconnect the Serial Communicator from a serial port.

Configuration

The configuration window is used to select the COM port you want to connect to and also set the correct communications protocols.

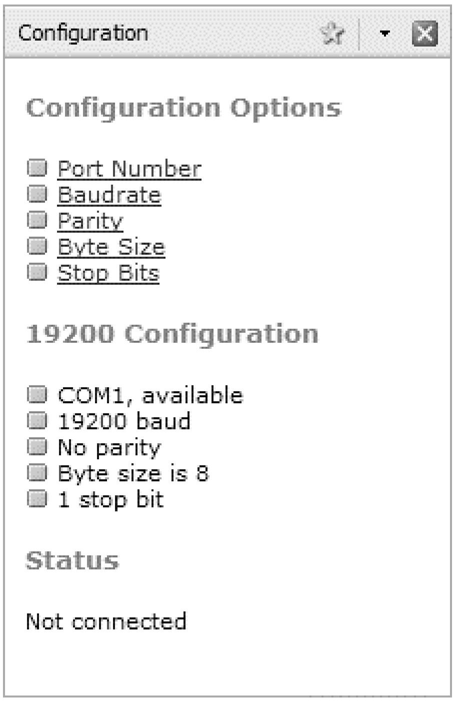

Configuration Options

- Port Number
- Baudrate
- Parity
- Byte Size
- Stop Bits

19200 Configuration

- COM1, available
- 19200 baud
- No parity
- Byte size is 8
- 1 stop bit

Status

Not connected

Clicking on a configuration link will display a drop down menu, listing available options. A summary of selected options is shown below the configuration links. For example, in the image above, summary information is displayed under the heading 19200 Configuration.

Favourites

Pressing the favourite icon will display a number of options allowing you to add, manage or load configuration favourites.

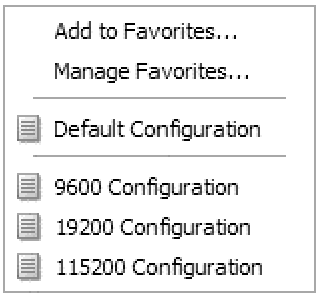

Add to Favourites

Select this option if you wish to save your current configuration. You can give your configuration a unique name, which will be displayed in the favourite drop down menu. For example, 9600 Configuration or 115200 Configuration

Manage Favourites

Select this option to remove a previously saved configuration favourite.

Notes

After pressing the connect icon on the main toolbar, the configuration window is automatically closed and opened again when disconnect is pressed. If you don't want the configuration window to automatically close, right click on the configuration window and un-check the Auto-Hide option.

Transmit Window

The transmit window enables you to send serial data to an external device connected to a PC serial port. In addition to textual data, the send window also enables you to send control characters. To display a list of transmit options, right click on the transmit window.

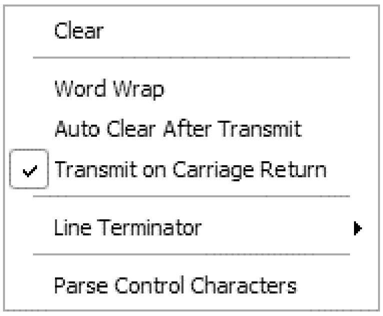

Clear

Clear the contents of the transmit window.

Word Wrap

This option allows you to wrap the text displayed in the transmit window.

Auto Clear After Transmit

Enabling this option will automatically clear the contents of the transmit window when data is sent.

Transmit on Carriage Return

This option will automatically transmit data when the carriage return key is pressed. If this option is disabled, you will need to manually press the send button or press F4 to transmit.

Line Terminator

You can append your data with a number of line terminations characters. These include CR, CR and LF, LF and CR, NULL and No Terminator.

Parse Control Characters

When enabled, the parse control characters option enables you to send control characters in your message, using either a decimal or hexadecimal notation. For example, if you want to send hello world followed by a carriage return and line feed character, you would use hello world#13#10 for decimal, or hello world$D$A for hex. Only numbers in the range 0 to 255 will be converted. For example, sending the message letter #9712345 will be interpreted as letter a12345.

If the sequence of characters does not form a legal number, the sequence is interpreted as normal characters. For example, hello world#here I am. If you don't want characters to be interpreted as a control sequence, but rather send it as normal characters, then all you need to do is use the tilda symbol (~). For example, letter ~#9712345 would be sent as letter #9712345.

Receive Window
The receive window is used to capture data sent from an external device (for example, a PIC MCU) to your PC. To display a list of transmit options, right click on the receive window.

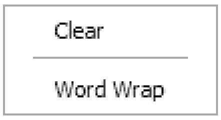

Clear
Clear the contents of the receive window.

Word Wrap
When enabled, incoming data is automatically word wrapped.

Notes
In order to advance the cursor to the next line in the receive window, you must transmit either a CR ($D) or a CR LF pair ($D $A) from your external device.

Labcenter Electronics PROTEUS VSM

Proteus Virtual System Modelling (VSM) combines mixed mode SPICE circuit simulation, animated components and microprocessor models to facilitate co-simulation of complete microcontroller based designs. For the first time ever, it is possible to develop and test such designs before a physical prototype is constructed.

The Proton Plus Development Suite comes shipped with a free demonstration version of the PROTEUS simulation environment and also a number of pre-configured Virtual Hardware Boards (VHB). Unlike the professional version of PROTEUS, you are unable to make any changes to the pre-configured boards or create your own boards.
If you already have a full version of PROTEUS VSM installed on your system (6.5.0.5 or higher), then this is the version that will be used by the IDE. If you don't have the full version, the IDE will default to using the demonstration installation.

System Requirements
Windows 98SE, ME, 2000 or XP
64MB RAM (128 MB or higher recommended)
300 MHz Processor (500 MHz or higher recommended)

Further Information
You can find out more about the simulator supplied with the Proton Development Suite from Labcentre Electronics

ISIS Simulator Quick Start Guide

This brief tutorial aims to outline the steps you need to take in order to use Labcenter Electronics PROTEUS Virtual System Modelling (VSM) with the Proton IDE. The first thing you need to do is load or create a program to simulate. In this worked example, we will keep things simple and use a classic flashing LED program. In the IDE, press the New toolbar button and type in the following: -

```
Device = 16F877
XTAL = 20
Symbol LED = PORTD.0
MainProgram:
High LED
```

```
Delayms 500
Low LED
Delayms 500
Goto MainProgram
```

You now need to make sure that the output of the compile and program process is re-directed to the simulator. Normally, pressing compile and program will create a *.hex file which is then sent to your chosen programmer. However, we want the output to be sent to the simulator, not a device programmer. To do this, press the small down arrow to the right of the compile and program toolbar icon and check the Labcenter Electronics PROTEUS VSM option, as shown below: -

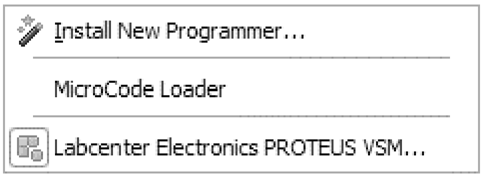
Install New Programmer...
MicroCode Loader
Labcenter Electronics PROTEUS VSM...

After selecting the above option, save your program and then press the compile and program toolbar button to build your project. This will then start the Virtual Hardware Board (VHB) Explorer, as shown below: -

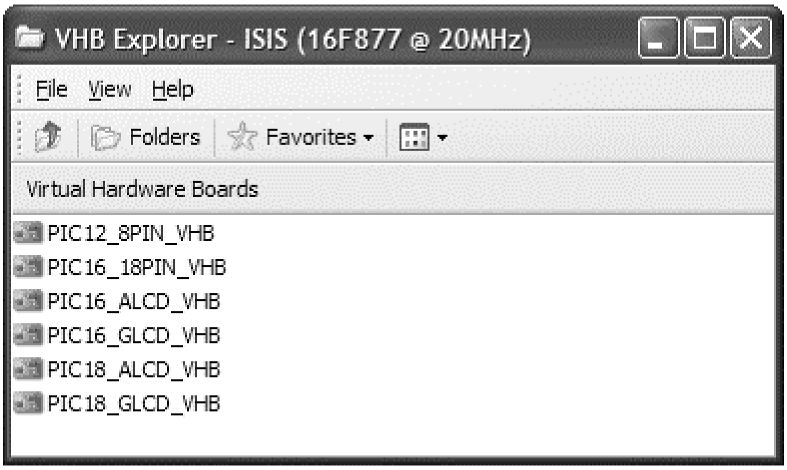

PIC12_8PIN_VHB
PIC16_18PIN_VHB
PIC16_ALCD_VHB
PIC16_GLCD_VHB
PIC18_ALCD_VHB
PIC18_GLCD_VHB

VHB Explorer is the IDE plugin that co-ordinates activity between the IDE and the simulator. Its primary purpose is to bind a Virtual Hardware Board to your program. In this example, the program has been built for the 16F877 MCU which flashes an LED connected to PORTD.0. To run the simulation for this program, just double click on the PIC16_ALCD_VHB hardware board item. This will invoke the PROTEUS simulator which will then automatically start executing your program using the selected board.

Additional Integration Tips
If you followed the PROTEUS VSM quick start guide, you will know how easy it is to load you program into the simulation environment with the Virtual Hardware Board (VHB) Explorer. However, one thing you might have noticed is that each time you press compile and program the VHB Explorer is always displayed. If you are using the same simulation board over and over again, manually having to select the board using VHB Explorer can become a little tiresome.

Virtual Hardware Boards Favourites

The good news is that every time you select a board using VHB Explorer, it is saved as a VHB Explorer favourite. You can access VHB Explorer favourites from within Proton IDE by right clicking on the main editor window and selecting the Virtual Hardware Boards option, as shown below : -

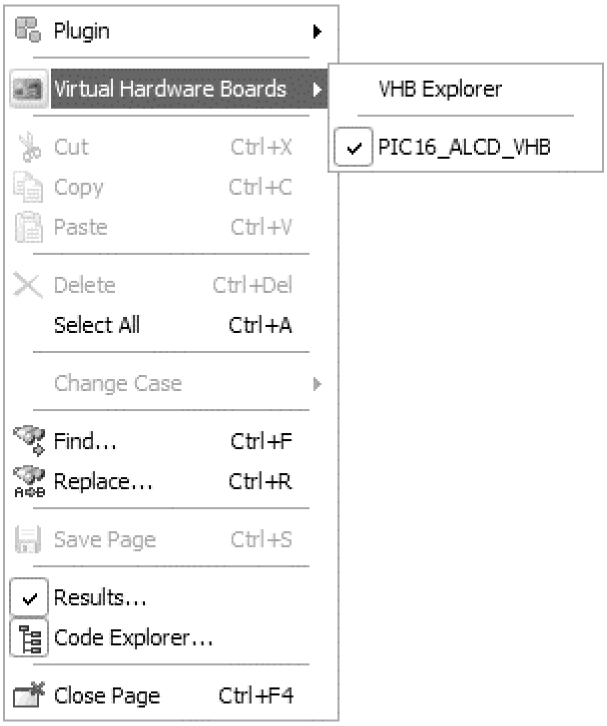
Plugin
Virtual Hardware Boards
VHB Explorer
PIC16_ALCD_VHB
Cut Ctrl+X
Copy Ctrl+C
Paste Ctrl+V
Delete Ctrl+Del
Select All Ctrl+A
Change Case
Find... Ctrl+F
Replace... Ctrl+R
Save Page Ctrl+S
Results...
Code Explorer...
Close Page Ctrl+F4

In the quick start guide, the program was bound to a simulation board called PIC16_ALCD_VHB. If we check this favourite and then press compile and program, VHB Explorer is not displayed. Instead, you project is loaded immediately into the PROTEUS simulation environment. You can have more than one board bound to your project, allowing you to quickly switch between target simulation boards during project development.

To add additional boards to your project, manually start VHB Explorer by selecting the plugin icon and clicking on the Labcenter Electronics PROTEUS VSM... option. When VHB Explorer starts, just double click on the board you want to be bound to your current project. Your new board selection will be displayed next time you right click on the main editor window and select Virtual Hardware Boards. You can delete a favourite board by manually starting VHB Explorer and pressing the Favourites toolbar icon. Choose the Manage Favourites option to remove the virtual hardware board from the favourites list.

Online Updates

Online updates enable you to keep right up to date with the latest IDE features and fixes. To access online updates, select VIEW...ONLINE UPDATES from the main menu. This will invoke the IDE update manager, as shown below: -

Update Manager

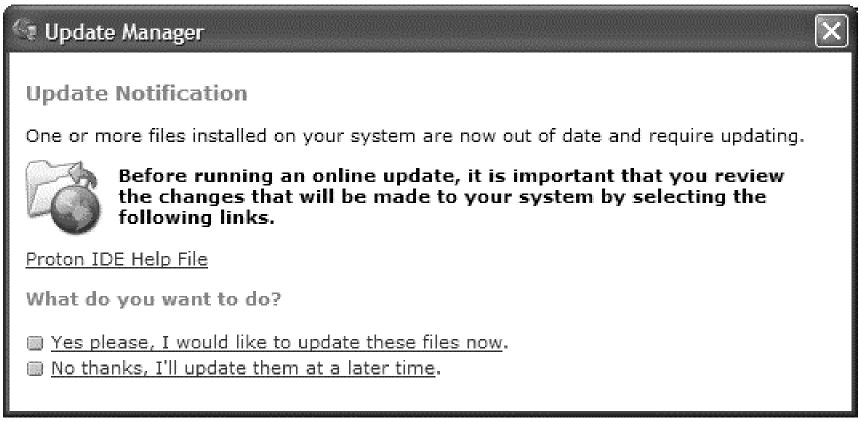

Update Notification

One or more files installed on your system are now out of date and require updating.

Before running an online update, it is important that you review the changes that will be made to your system by selecting the following links.

Proton IDE Help File

What do you want to do?

☐ Yes please, I would like to update these files now.

☐ No thanks, I'll update them at a later time.

Before installing an update, it is important you review the changes that will be made to your system. If your system is up to date, you will see the following message: -

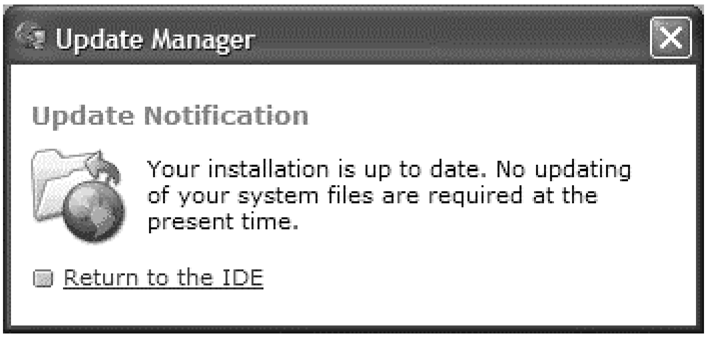

Update Notification

Your installation is up to date. No updating of your system files are required at the present time.

☐ Return to the IDE

Update Options

Online updating will work with a dial-up, LAN or broadband connection. The IDE will only check for online updates if requested to do so. That is, you explicitly select VIEW...ONLINE UPDATES. If you want the update manager to automatically check from updates each time Proton IDE starts, then select VIEW...EDITOR OPTIONS and choose the Online Updating tab.
Please note that selecting VIEW...ONLINE UPDATES will always force a dial up connection (assuming that you use a dial up connection and you are not already connected to the internet). If Proton IDE has made a connection for you, it terminates the connection when the update process has completed.

Firewalls

If you have a firewall installed, online updating will only work if the IDE has been granted access to the internet.

Confidentiality

The online update process is a proprietary system developed by Mecanique that is both safe and secure. The update manager will only send information it needs to authenticate access to online updates. The update manager will not send any personal information whatsoever to the update server. The update manager will not send any information relating to third party software installed on your system to the update server.

Compiler Overview.

PICmicro^{tm} Devices

The compiler support most of the PICmicro^{tm} range of devices, and takes full advantage of their various features e.g. The A/D converter in the 16F87x series, the data memory eeprom area in the16F84, the hardware multiply present on the 16-bit core devices etc.

This manual is not intended to give you details about PICmicro^{tm} devices, therefore, for further information visit the Microchip website at **www.microchip.com**, and download the multitude of datasheets and application notes available.

Limited 12-bit Device Compatibility.

The 12-bit core PICmicro^{tm} microcontrollers have been available for a long time, and are at the heart of many excellent, and complex projects. However, with their limited architecture, they were never intended to be used for high level languages such as BASIC. Some of these limits include only a two-level hardware stack and small amounts of general purpose RAM memory. The code page size is also small at 512 bytes. There is also a limitation that calls and computed jumps can only be made to the first half (256 words) of any code page. Therefore, these limitations have made it necessary to eliminate some compiler commands and modify the operation of others.

While many useful programs can be written for the 12-bit core PICmicros using the compiler, there will be some applications that are not suited to these devices. Choosing a 14-bit core device with more resources will, in most instances, be the best solution.

Some of the commands that are not supported for the 12-bit core PICmicros are illustrated in the table below: -

Command	**Reason for omission**
DWORDs	Memory limitations
FLOATs	Memory limitations
ADIN	No internal ADCs
CDATA	No write modify feature
CLS	Limited stack size
CREAD	No write modify feature
CURSOR	Limited stack size
CWRITE	No write modify feature
DATA	Page size limitations
DTMFOUT	Limited stack size
EDATA	No on-board EEPROM
EREAD	No on-board EEPROM
EWRITE	No on-board EEPROM
FREQOUT	Limited stack size
LCDREAD	No graphic LCD support
LCDWRITE	No graphic LCD support
HPWM	No 12-bit MSSP modules
HRSIN	No hardware serial port
HRSOUT	No hardware serial port
HSERIN	No hardware serial port
HSEROUT	No hardware serial port
INTERRUPTS	No Interrupts
PIXEL	No graphic LCD support
PLOT	No graphic LCD support
READ	Page size limitations

RESTORE	Limited memory
SEROUT	Limited memory
SERIN	Limited memory
SOUND2	Limited resources
UNPLOT	No graphic LCD support
USBIN	No 12-bit USB devices
USBOUT	No 12-bit USB devices
XIN	Limited stack size
XOUT	Limited stack size

Trying to use any of the above commands with 12-bit core devices will result in the compiler producing numerous SYNTAX errors. If any of these commands are a necessity, then choose a comparable 14-bit core device.

The available commands that have had their operation modified are: -

PRINT, RSOUT, BUSIN, BUSOUT

Most of the modifiers are not supported for these commands because of memory and stack size limitations, this includes the **AT** , and the **STR** modifier. However, the **@**, **DEC** and **DEC3** modifiers are still available.

Programming Considerations for 12-bit Devices.

Because of the limited architecture of the 12-bit core PICmicro^{tm} microcontrollers, programs compiled for them by the compiler will be larger and slower than programs compiled for the 14-bit core devices. The two main programming limitations that will most likely occur are running out of RAM memory for variables, and running past the first 256 word limit for the library routines.

Even though the compiler arranges its internal SYSTEM variables more intuitively than previous versions, it still needs to create temporary variables for complex expressions etc. It also needs to allocate extra RAM for use as a SOFTWARE-STACK so that the BASIC program is still able to nest **GOSUB**s up to 4 levels deep.

Some PICmicro^{tm} devices only have 25 bytes of RAM so there is very little space for user variables on those devices. Therefore, use variables sparingly, and always use the appropriately sized variable for a specific task. i.e. **BYTE** variable if 0-255 is required, **WORD** variable if 0-65535 required, **BIT** variables if a true or false situation is required. Try to alias any commonly used variables, such as loops or temporary stores etc.

As was mentioned earlier, 12-bit core PICmicro^{tm} microcontrollers can call only into the first half (256 words) of a code page. Since the compiler's library routines are all accessed by calls, they must reside entirely in the first 256 words of the PICmicro^{tm} code space. Many library routines, such as **BUSIN**, are quite large. It may only take a few routines to outgrow the first 256 words of code space. There is no work around for this, and if it is necessary to use more library routines that will fit into the first half of the first code page, it will be necessary to move to a 14-bit core PICmicro^{tm} instead of the 12-bit core device.

No 32-bit or floating point variable support with 12-bit devices.

Because of the profound lack of RAM space available on most 12-bit core devices, the PROTON+ compiler does not allow 32-bit **DWORD** type variables to be used. For 32-bit support, use on of the many 14, or 16-bit core equivalent devices. Floating point variables are also not supported with 12-bit core devices.

Device Specific issues

Before venturing into your latest project, always read the datasheet for the specific device being used. Because some devices have features that may interfere with expected pin operations. The PIC16C62x and the 16F62x devices are examples of this. These PICmicros have analogue comparators on PORTA. When these chips first power up, PORTA is set to analogue mode. This makes the pin functions on PORTA work in a strange manner. To change the pins to digital, simply add the following line near the front of your BASIC program, or before any of the pins are accessed: -

```
CMCON = 7
```

Any PICmicro^{tm} with analogue inputs, such as the PIC16C7xx, PIC16F87x and PIC12C67x series devices, will power up in analogue mode. If you intend to use them as digital types you must set the pins to digital by using the following line of code: -

```
ADCON1 = 7
```

Alternatively, you can use a special command that sets all the pins to digital mode: -

```
ALL_DIGITAL = TRUE
```

This will set analogue pins to digital on any compatible device.

Another example of potential problems is that bit-4 of PORTA (PORTA.4) exhibits unusual behaviour when used as an output. This is because the pin has an open drain output rather than the usual bipolar stage as in the rest of the output pins. This means it can pull to ground when set to 0 (low), but it will simply float when set to a 1 (high), instead of going high.

To make this pin act as expected, add a pull-up resistor between the pin and 5 Volts. A typical value resistor may be between 1K and 33K, depending on the device it is driving. If the pin is used as an input, it behaves the same as any other pin.

Some PICmicros, such as the PIC16F87x range, allow low-voltage programming. This function takes over one of the PORTB (PORTB.3) pins and can cause the device to act erratically if this pin is not pulled low. In normal use, It's best to make sure that low-voltage programming is disabled at the time the PICmicro^{tm} is programmed. By default, the low voltage programming fuse is disabled, however, if the **CONFIG** directive is used, then it may inadvertently be omitted.

All of the PICmicro^{tm} pins are set to inputs on power-up. If you need a pin to be an output, set it to an output before you use it, or use a BASIC command that does it for you. Once again, always read the PICmicro^{tm} data sheets to become familiar with the particular part.

The name of the port pins on the 8 pin devices such as the PIC12C50X, PIC12C67x ,12CE67x and 12F675 is GPIO. The name for the TRIS register is TRISIO: -

```
GPIO.0 = 1                ' Set GPIO.0 high
TRISIO = %101010          ' Manipulate ins and outs
```

However, these are also mapped as PORTB, therefore any reference to PORTB on these devices will point to the relevant pin.

Some devices have internal pull-up resistors on PORTB, or GPIO. These may be enabled or disabled by issuing the **PORTB_PULLUPS** command: -

```
        PORTB_PULLUPS = ON            ' Enable PORTB pull-up resistors
```

or

```
        PORTB_PULLUPS = OFF           ' Disable PORTB pull-up resistors
```

Identifiers

An identifier is a technical term for a name. Identifiers are used for line labels, variable names, and constant aliases. An identifier is any sequence of letters, digits, and underscores, although it must not start with a digit. Identifiers are not case sensitive, therefore label, LABEL, and Label are all treated as equivalent. And while labels might be any number of characters in length, only the first 32 are recognised.

Line Labels

In order to mark statements that the program may wish to reference with the **GOTO**, **CALL**, or **GOSUB** commands, the compiler uses line labels. Unlike many older BASICs, the compiler does not allow or require line numbers and doesn't require that each line be labelled. Instead, any line may start with a line label, which is simply an identifier followed by a colon '**:**'.

```
Lab:
        PRINT "Hello World"
        GOTO Lab
```

Variables

Variables are where temporary data is stored in a BASIC program. They are created using the **DIM** keyword. Because RAM space on PICmicros is somewhat limited in size, choosing the right size variable for a specific task is important. Variables may be **BITS**, **BYTES**, **WORDS**, **DWORDS** or **FLOATS**.

Space for each variable is automatically allocated in the microcontroller's RAM area. The format for creating a variable is as follows: -

```
DIM Label AS Size
```

Label is any identifier, (excluding keywords). *Size* is **BIT**, **BYTE, WORD**, **DWORD** or **FLOAT**. Some examples of creating variables are: -

```
DIM Dog AS BYTE               ' Create an 8-bit unsigned variable (0 to 255)
DIM Cat AS BIT                ' Create a single bit variable (0 or 1)
DIM Rat AS WORD               ' Create a 16-bit unsigned variable (0 to 65535)
DIM Large_Rat as DWORD        ' Create a 32-bit signed variable (-2147483648 to
                              ' +2147483647)
DIM Pointy_Rat as FLOAT       ' Create a 32-bit floating point variable
```

The number of variables available depends on the amount of RAM on a particular device and the size of the variables within the BASIC program. The compiler may reserve approximately 26 RAM locations for its own use. It may also create additional temporary (SYSTEM) variables for use when calculating complex equations, or more complex command structures. Especially if floating point calculations are carried out.

Intuitive Variable Handling.

The compiler handles its SYSTEM variables intuitively, in that it only creates those that it requires. Each of the compiler's built in library subroutines i.e. **PRINT**, **RSOUT** etc, require a certain amount of SYSTEM RAM as internal variables. Previous versions of the compiler defaulted to 26 RAM spaces being created before a program had been compiled. However, with the 12-bit core device compatibility, 26 RAM slots is more than some devices possess.

Try the following program, and look at the RAM usage message on the bottom **STATUS** bar.

```
    DIM WRD1 AS WORD                ' Create a WORD variable i.e. 16-bits

Loop:
    HIGH PORTB.0                    ' Set bit 0 of PORTB high
    FOR WRD1= 1 TO 20000 : NEXT     ' Create a delay without using a library call
    LOW PORTB.0                     ' Set bit 0 of PORTB high
    FOR WRD1= 1 TO 20000 : NEXT     ' Create a delay without using a library call
    GOTO Loop                       ' Do it forever
```

Only two bytes of RAM were used, and those were the ones declared in the program as variable WRD1.

The compiler will increase it's SYSTEM RAM requirements as programs get larger, or more complex structures are used, such as complex expressions, inline commands used in conditions, Boolean logic used etc. However, with the limited RAM space available on some PICmicro^{tm} devices, every byte counts.

There are certain reserved words that cannot be used as variable names, these are the system variables used by the compiler.

The following reserved words should not be used as variable names, as the compiler will create these names when required: -

PP0, PP0H, PP1, PP1H, PP2, PP2H, PP3, PP3H, PP4, PP4H, PP5, PP5H, PP6, PP6H, PP7, PP7H, PP8, PP9H,GEN, GENH, GEN2, GEN2H, GEN3, GEN3H, GEN4, GEN4H, GPR, BPF, BPFH.

RAM space required.
Each type of variable requires differing amounts of RAM memory for its allocation. The list below illustrates this.

FLOAT	Requires 4 bytes of RAM.
DWORD	Requires 4 bytes of RAM.
WORD	Requires 2 bytes of RAM.
BYTE	Requires 1 byte of RAM.
BIT	Requires 1 byte of RAM for every 8 BIT variables used.

Each type of variable may hold a different minimum and maximum value.

FLOAT type variables may theoretically hold a value from -1e37 to +1e38, but because of the 32-bit architecture of the compiler, a maximum and minimum value should be thought of as -2147483646.999 to +2147483646.999 making this the most accurate of the variable family types. However, more so than DWORD types, this comes at a price as FLOAT calculations and comparisons will use more code space within the PICmicro^{tm}. Use this type of variable sparingly, and only when strictly necessary. Smaller floating point values offer more accuracy.

DWORD type variables may hold a value from -2147483648 to +2147483647 making this the largest of the variable family types. This comes at a price however, as **DWORD** calculations and comparisons will use more code space within the PICmicro^{tm}. Use this type of variable sparingly, and only when necessary.

WORD type variables may hold a value from 0 to 65535, which is usually large enough for most applications. It still uses more memory, but not nearly as much as a **DWORD** type.

BYTE type variables may hold a value for 0 to 255, and are the usual work horses of most programs. Code produced for **BYTE** sized variables is very low compared to **WORD**, **FLOAT**, or **DWORD** types, and should be chosen if the program requires faster, or more efficient operation.

BIT type variables may hold a 0 or a 1. These are created 8 at a time, therefore declaring a single **BIT** type variable in a program will not save RAM space, but it will save code space, as **BIT** type variables produce the most efficient use of code for comparisons etc.

See also : ALIASES, ARRAYS, DIM, CONSTANTS SYMBOL, Floating Point Math.

Floating Point Math

The PROTON+ compiler can perform 32 x 32 bit IEEE 754 *'Compliant'* Floating Point calculations.

Declaring a variable as **FLOAT** will enable floating point calculations on that variable.

```
DIM FLT AS FLOAT
```

To create a floating point constant, add a decimal point. Especially if the value is a whole number.

```
SYMBOL PI = 3.14          ' Create an obvious floating point constant

SYMBOL FL_NUM = 5.0   ' Create a floating point format value of a whole number
```

Please note. Floating point arithmetic is not the utmost in accuracy, it is merely a means of compressing a complex or large value into a small space (4 bytes in the compiler's case). Perfectly adequate results can usually be obtained from correct scaling of integer variables, with an increase in speed and a saving of RAM and code space. 32 bit floating point math is extremely microcontroller intensive since the PICmicro^{tm} is only an 8 bit processor. It also consumes large amounts of RAM, and code space for its operation, therefore always use floating point sparingly, and only when strictly necessary. Floating point is not available on 12-bit core PICmicros because of memory restrictions, and is most efficient when used with 16-bit core devices because of the more linear code and RAM specifications.

Floating Point Format

The PROTON+ compiler uses the Microchip variation of IEEE 754 floating point format. The differences to standard IEEE 745 are minor, and well documented in Microchip application note AN575 (downloadable from **www.microchip.com**).

Floating point numbers are represented in a modified IEEE-754 format. This format allows the floating-point routines to take advantage of the PICmicro's architecture and reduce the amount of overhead required in the calculations. The representation is shown below compared to the IEEE-754 format: where *s* is the sign bit, *y* is the lsb of the exponent and *x* is a placeholder for the mantissa and exponent bits.

The two formats may be easily converted from one to the other by manipulation of the Exponent and Mantissa 0 bytes. The following assembly code shows an example of this operation.

Format	**Exponent**	**Mantissa 0**	**Mantissa 1**	**Mantissa 2**
IEEE-754	sxxx xxxx	yxxx xxxx	xxxx xxxx	xxxx xxxx
Microchip	xxxx xxxy	sxxx xxxx	xxxx xxxx	xxxx xxxx

IEEE-754 TO MICROCHIP

```
RLF MANTISSA0
RLF EXPONENT
RRF MANTISSA0
```

MICROCHIP TO IEEE-754

```
RLF MANTISSA0
RRF EXPONENT
RRF MANTISSA0
```

Variables Used by the Floating Point Libraries.

Several 8-bit RAM registers are used by the math routines to hold the operands for and results of floating point operations. Since there may be two operands required for a floating point operation (such as multiplication or division), there are two sets of exponent and mantissa registers reserved (A and B). For argument A, PBP_AARGHHH holds the exponent and PBP_AARGHH, PBP_AARGH and PBP_AARG hold the mantissa. For argument B, PBP_BARGHHH holds the exponent and PBP_BARGHH, PBP_BARGH and PBP_BARG hold the mantissa.

Floating Point Example Programs.

```
' Multiply two floating point values
DEVICE = 18F452
XTAL = 4
DIM FLT AS FLOAT
SYMBOL FL_NUM = 1.234          ' Create a floating point constant value
CLS
FLT = FL_NUM *10
PRINT DEC FLT
STOP
```

```
' Add two floating point variables
DEVICE = 18F452
XTAL = 4
DIM FLT AS FLOAT
DIM FLT1 AS FLOAT
DIM FLT2 AS FLOAT
CLS
FLT1 = 1.23
FLT2 = 1000.1
FLT = FLT1 + FLT2
PRINT DEC FLT
STOP
```

```
' A digital voltmeter, using the on-board ADC
DEVICE = 16F877
XTAL = 4
ADIN_RES = 10                  ' 10-bit result required
ADIN_TAD = FRC                 ' RC OSC chosen
ADIN_DELAY = 50                ' Allow 50us sample time
DIM RAW AS WORD
DIM VOLTS AS FLOAT
SYMBOL QUANTA = 5.0 / 1024     ' Calculate the quantising value
CLS
TRISA = %00000001              ' Configure AN0 (PORTA.0) as an input
ADCON1 = %10000000             ' Set analogue input on PORTA.0
WHILE 1 = 1
RAW = ADIN 0
VOLTS = RAW * QUANTA
PRINT AT 1,1,DEC2 VOLTS,"V    "
WEND
```

Notes.
Floating point expressions containing more than 3 operands are not allowed, due to the extra RAM space required for a software stack.

Any expression that contains a floating point variable or value will be calculated as a floating point. Even if the expression also contains a **BYTE**, **WORD**, or **DWORD** value or variable.

If the assignment variable is a **BYTE**, **WORD**, or **DWORD** variable, but the expression is of a floating point nature. Then the floating point result will be converted into an integer.

```
DEVICE = 16F877
DIM DWD AS DWORD
DIM FLT AS FLOAT
SYMBOL PI = 3.14
FLT = 10
DWD = FLT + PI      ' Float calculation will result in 13.14, but reduced to integer 13
PRINT DEC DWD   ' Display the integer result 13
STOP
```

For a more in-depth explanation of floating point, download the Microchip application notes AN575, and AN660. These can be found at **www.microchip.com**.

Code space requirements.

As mentioned above, floating point accuracy comes at a price of speed, and code space. Both these issues are not a problem if a 16-bit core device is used, however 14-bit core devices can pose a problem. The compiler attempts to load the floating point libraries into low memory, along with all the other library subroutines, but if it does not fit within the first 2048 bytes of code space, and the PICmicro^{tm} has more than 2048 bytes of code available, the floating point libraries will be loaded into the top 1000 bytes of code memory. This is invisible to the user, however, the compiler will warn that this is occurring in case that part of memory is being used by your BASIC program.

More Accurate Display or Conversion of Floating Point values.

By default, the compiler uses a relatively small routine for converting floating point values to decimal, ready for **RSOUT**, **PRINT STR$** etc. However, because of its size, it does not perform any rounding of the value first, and is only capable of converting relatively small values. i.e. approx 6 digits of accuracy. In order to produce a more accurate result, the compiler needs to use a larger routine. This is implemented by using a **DECLARE**: -

FLOAT_DISPLAY_TYPE = LARGE or STANDARD

Using the LARGE model for the above declare will trigger the compiler into using the more accurate floating point to decimal routine. Note that even though the routine is larger than the standard converter, it actually operates much faster.

The compiler defaults to STANDARD if the **DECLARE** is not issued in the BASIC program.

See also : DIM, SYMBOL, ALIASES, ARRAYS, CONSTANTS .

Aliases

The **SYMBOL** directive is the primary method of creating an alias, however DIM can also be used to create an alias to a variable. This is extremely useful for accessing the separate parts of a variable.

```
DIM Fido as Dog                 ' Fido is another name for Dog
DIM Mouse as Rat.LOWBYTE        ' Mouse is the first byte (low byte) of word Rat
DIM Tail as Rat.HIGHBYTE        ' Tail is the second byte (high byte) of word Rat
DIM Flea as Dog.0               ' Flea is bit-0 of Dog
```

There are modifiers that may also be used with variables. These are **HIGHBYTE**, **LOWBYTE**, **BYTE0**, **BYTE1**, **BYTE2**, **BYTE3**, **WORD0**, and **WORD1**.

WORD0, **WORD1**, **BYTE2**, and **BYTE3** may only be used in conjunction with a 32-bit **DWORD** type variable.

HIGHBYTE and **BYTE1** are one and the same thing, when used with a **WORD** type variable, they refer to the High byte of a **WORD** type variable: -

```
DIM WRD as WORD                           ' Declare a WORD sized variable
DIM WRD_HI as WRD.HIGHBYTE
' WRD_HI now represents the HIGHBYTE of variable WRD
```

Variable WRD_HI is now accessed as a **BYTE** sized type, but any reference to it actually alters the high byte of WRD.

However, if **BYTE1** is used in conjunction with a **DWORD** type variable, it will extract the second byte. **HIGHBYTE** will still extract the high byte of the variable, as will **BYTE3**.

The same is true of **LOWBYTE** and **BYTE0**, but they refer to the Low Byte of a **WORD** type variable: -

```
DIM WRD as WORD                           ' Declare a WORD sized variable
DIM WRD_LO as WRD.LOWBYTE
' WRD_LO now represents the LOWBYTE of variable WRD
```

Variable WRD_LO is now accessed as a **BYTE** sized type, but any reference to it actually alters the low byte of WRD.

The modifier **BYTE2** will extract the 3rd byte from a 32-bit **DWORD** type variable, as an alias. Likewise **BYTE3** will extract the high byte of a 32-bit variable.

```
DIM DWD as DWORD                     ' Declare a 32-bit variable named DWD
DIM PART1 as DWD.BYTE0               ' Alias PART1 to the low byte of DWD
DIM PART2 as DWD.BYTE1               ' Alias PART2 to the 2nd byte of DWD
DIM PART3 as DWD.BYTE2               ' Alias PART3 to the 3rd byte of DWD
DIM PART4 as DWD.BYTE3               ' Alias PART3 to the high (4th) byte of DWD
```

The **WORD0** and **WORD1** modifiers extract the low word and high word of a **DWORD** type variable, and is used the same as the BYTEn modifiers.

```
DIM DWD as DWORD                ' Declare a 32-bit variable named DWD
DIM PART1 as DWD.WORD0          ' Alias PART1 to the low word of DWD
DIM PART2 as DWD.WORD1          ' Alias PART2 to the high word of DWD
```

RAM space for variables is allocated within the PICmicro^{tm} in the order that they are placed in the BASIC code. For example: -

```
DIM VAR1 as BYTE
DIM VAR2 as BYTE
```

Places VAR1 first, then VAR2: -

```
VAR1 EQU n
VAR2 EQU n
```

This means that on a PICmicro^{tm} with more than one BANK, the first *n* variables will always be in BANK0 (the value of *n* depends on the specific PICmicro^{tm} used).

Finer points for variable handling.

The position of the variable within BANKs is usually of little importance if BASIC code is used, however, if assembler routines are being implemented, always assign any variables used within them first.

Problems may also arise if a **WORD**, or **DWORD** variable crosses a BANK boundary. If this happens, a warning message will be displayed in the error window. Most of the time, this will not cause any problems, however, to err on the side of caution, try and ensure that **WORD**, or **DWORD** type variables are fully inside a BANK. This is easily accomplished by placing a dummy **BYTE** variable before the offending **WORD**, or **DWORD** type variable, or relocating the offending variable within the list of DIM statements.

WORD type variables have a low byte and a high byte. The high byte may be accessed by simply adding the letter H to the end of the variable's name. For example: -

```
DIM WRD as WORD
```

Will produce the assembler code: -

```
WRD EQU n
WRDH EQU n
```

To access the high byte of variable WRD, use: -

```
WRDH = 1
```

This is especially useful when assembler routines are being implemented, such as: -

```
MOVLW 1
MOVWF WRDH              ; Load the high byte of WRD with 1
```

DWORD type variables have a low, mid1, mid2, and hi byte. The high byte may be accessed by adding three letter H's to the variable's name. For example: -

```
DIM DWD as DWORD
```

Will produce the assembler code: -

```
DWD EQU n
DWDH EQU n
DWDHH EQU n
DWDHHH EQU n
```

To access the high byte of variable WRD, use: -

```
DWDHHH = 1
```

or

```
DWD.HIGHBYTE = 1
```

The low, and mid bytes may be similarly accessed by adding or removing the "H" after the variable's name.

Constants

Named constants may be created in the same manner as variables. It can be more informative to use a constant name instead of a constant number. Once a constant is declared, it cannot be changed later, hence the name ‘constant'.

DIM *Label* **as** *Constant expression*

```
DIM MOUSE as 1
DIM MICE as MOUSE * 400
DIM MOUSE_PI as MOUSE + 2.14
```

Although **DIM** can be uses to create constants, **SYMBOL** is more often used.

Symbols

SYMBOL provides yet another method for aliasing variables and constants. SYMBOL cannot be used to create a variable. Constants declared using SYMBOL do not use any RAM within the PICmicro^{tm}.

```
SYMBOL CAT = 123
SYMBOL TIGER = CAT                 ' TIGER now holds the value of CAT
SYMBOL MOUSE = 1                   ' Same as DIM Mouse AS 1
SYMBOL TIGOUSE = TIGER + MOUSE ' Add Tiger to Mouse to make Tigouse
```

Floating point constants may also be created using **SYMBOL** by simply adding a decimal point to a value.

```
SYMBOL PI = 3.14              ' Create a floating point constant named PI
SYMBOL FL_NUM = 5.0           ' Create a floating point constant holding the value 5
```

Floating point constant can also be created using expressions.

```
' Create a floating point constant holding the result of the expression
SYMBOL QUANTA = 5.0 / 1024
```

If a variable or register's name is used in a constant expression then the variable's or register's address will be substituted, not the value held in the variable or register: -

```
SYMBOL CON = (PORTA + 1)           ' CON will hold the value 6 (5+1)
```

SYMBOL is also useful for aliasing Ports and Registers: -

```
SYMBOL LED = PORTA.1               ' LED now references bit-1 of PORTA
SYMBOL T0IF = INTCON.2             ' T0IF now references bit-2 of INTCON register
```

The equal sign between the Constant's name and the alias value is optional: -

```
SYMBOL LED PORTA.1                 ' Same as SYMBOL LED=PORTA.1
```

Numeric Representations

PROTON and PROTON+ recognise several different number representations: -

Binary is prefixed by %. i.e. %0101
Hexadecimal is prefixed by $. i.e. $0A
Character byte is surrounded by quotes. i.e. "a" represents a value of 97
Decimal values need no prefix.
Floating point is created by using a decimal point. i.e. 3.14 **(PROTON+ only)**

Quoted String of Characters

A Quoted String of Characters contains one or more characters (maximum 200) and is delimited by double quotes. Such as "Hello World"

Strings are usually treated as a list of individual character values, and are used by commands such as **PRINT**, **RSOUT**, **BUSOUT**, **EWRITE** etc. And of course, **STRING** variables.

NULL Terminated

NULL is a term used in computer languages for zero. So a NULL terminated STRING is a collection of characters followed by a zero in order to signify the end of characters. For example, the string of characters "HELLO", would be stored as: -

"H" , "E" , "L" , "L" ,"O" , 0

Notice that the terminating NULL is the value 0 not the character "0".

Ports and other Registers

All of the PICmicro^{tm} registers, including the ports, can be accessed just like any other byte-sized variable. This means that they can be read from, written to or used in equations directly.

```
PORTA = %01010101       ' Write value to PORTA

VAR1 = WRD * PORTA      ' Multiply variable WRD with the contents of PORTA
```

The compiler can also combine16-bit registers such as TMR1 into a **WORD** type variable. Which makes loading and reading these registers simple: -

```
' Combine TMR1L, and TMR1H into WORD variable TIMER1
DIM TIMER1 AS TMR1L.WORD

TIMER1 = 12345                   ' Load TMR1 with value 12345
```
or
```
WRD1 = TIMER1                    ' Load WRD1 with contents of TMR1
```

The **.WORD** extension links registers TMR1L, and TMR1H, (which are assigned in the .LBP file associated with relevant PICmicro^{tm} used).

Any hardware register that can hold a 16-bit result can be assigned as a **WORD** type variable: -

```
' Combine ADRESL, and ADRESH into WORD variable AD_RESULT
DIM AD_RESULT AS ADRES.WORD
' Combine PRODL, and PRODH into WORD variable MUL_PROD
DIM MUL_PROD AS PRODL.WORD
```

General Format

The compiler is not case sensitive, except when processing string constants such as "hello".

Multiple instructions and labels can be combined on the same line by separating them with colons '**:**'.

The examples below show the same program as separate lines and as a single-line: -

Multiple-line version: -

```
TRISB = %00000000        ' Make all pins on PORTB outputs
FOR VAR1 = 0 TO 100      ' Count from 0 to 100
PORTB = VAR1             ' Make PORTB = count (VAR1)
NEXT                     ' Continue counting until 100 is reached
```

Single-line version: -

```
TRISB = %00000000 : FOR VAR1 = 0 TO 100 : PORTB = VAR1 : NEXT
```

Line Continuation Character '_'

Lines that are too long to display, may be split using the continuation character '**_**'. This will direct the continuation of a command to the next line. It's use is only permitted after a comma delimiter: -

```
VAR1 = LOOKUP VAR2,[1,2,3,_
4,5,6,7,8]
```

or

```
PRINT AT 1,1,_
"HELLO WORLD",_
DEC VAR1,_
HEX VAR2
```

Inline Commands within Comparisons

A very useful addition to the compiler is the ability to mix most INLINE commands into comparisons. For example: -

ADIN, BUSIN, COUNTER, DIG, EREAD, HBUSIN, INKEY, LCDREAD, LOOKDOWN, LOOKDOWNL, LOOKUP, LOOKUPL, PIXEL, POT, PULSIN, RANDOM, SHIN, RCIN, RSIN etc.

All these commands may be used in an **IF-THEN**, **SELECT-CASE**, **WHILE-WEND**, or **REPEAT-UNTIL** structure. For example, with the previous versions of the compiler, to read a key using the **INKEY** command required a two stage process: -

```
    VAR1 = INKEY
    IF VAR1 = 12 THEN { do something }
```

Now, the structure: -

```
    IF INKEY = 12 THEN { do something }
```

is perfectly valid. And so is: -

```
    IF ADIN 0 = 1020 THEN { do something }        ' Test the ADC from channel 0
```

The new structure of the in-line commands does not always save code space, however, it does make the program easier to write, and a lot easier to understand, or debug if things go wrong.

The **LOOKUP**, **LOOKUPL**, **LOOKDOWN**, and **LOOKDOWNL** commands may also use another in-line command instead of a variable. For example, to read and re-arrange a key press from a keypad: -

```
    KEY = LOOKUP INKEY, [1,2,3,15,4,5,6,14,7,8,9,13,10,0,11,12,255]
```

In-line command differences do not stop there. They may now also be used for display purposes in the **RSOUT**, **SEROUT**, **HRSOUT**, and **PRINT** commands: -

```
LABEL: RSOUT LOOKUP INKEY, [1,2,3,15,4,5,6,14,7,8,9,13,10,0,11,12,255] : GOTO LABEL
```

How's that for a simple serial keypad program. Or: -

```
    WHILE 1 = 1 : PRINT RSIN : WEND
```

Believe it or not, the above single line of code is a simple serial LCD controller. Accepting serial data through the **RSIN** command, and displaying the data with the **PRINT** command.

Creating and using Arrays

The PROTON+ compiler supports multi part **BYTE**, and **WORD** variables named arrays. An array is a group of variables of the same size (8-bits wide, or 16-bits wide), sharing a single name, but split into numbered cells, called elements.

An array is defined using the following syntax: -

```
DIM Name[ length ] AS BYTE

DIM Name[ length ] AS WORD
```

where Name is the variable's given name, and the new argument, [*length*], informs the compiler how many elements you want the array to contain. For example: -

```
DIM MYARRAY[10] AS BYTE     ' Create a 10 element byte array.
DIM MYARRAY[10] AS WORD     ' Create a 10 element word array.
```

A unique feature of the compiler is the ability to allow up to 256 elements within a **BYTE** array, and 128 elements in a **WORD** array. However, because of the rather complex way that some PICmicro's RAM cells are organised (i.e. BANKS), there are a few rules that need to be observed when creating arrays.

PICmicro^{tm} Memory Map Complexities.

Larger PICmicros have more RAM available for variable storage, however, accessing the RAM on the 14-bit core devices is not as straightforward as one might expect. The RAM is organised in BANKS, where each BANK is 128 bytes in length. Crossing these BANKs requires bits 5 and 6 of the STATUS register to be manipulated. The larger PICmicros such as the 16F877 device have 512 RAM locations, but only 368 of these are available for variable storage, the rest are known as SYSTEM REGISTERS and are used to control certain aspects of the PICmicro^{tm} i.e. TRIS, IO ports, UART etc. The compiler attempts to make this complex system of BANK switching as transparent to the user as possible, and succeeds where standard **BIT**, **BYTE**, **WORD**, and **DWORD** variables are concerned. However, ARRAY variables will inevitably need to cross the BANKS in order to create arrays larger than 96 bytes, which is the largest section of RAM within BANK0. Coincidently, this is also the largest array size permissible by most other compilers at the time of writing this manual.

Large arrays (normally over 96 elements) require that their STARTING address be located within the first 255 bytes of RAM (i.e. within BANK0 and BANK2), the array itself may cross this boundary. This is easily accomplished by declaring them at, or near the top of the list of variables. The Compiler does not manipulate the variable declarations. If a variable is placed first in the list, it will be placed in the first available RAM slot within the PICmicro^{tm}. This way, you, the programmer maintains finite control of the variable usage. For example, commonly used variables should be placed near the top of the list of declared variables. An example of declaring an array is illustrated below: -

```
DEVICE 16F877                     ' Choose a PICmicro with extra RAM
DIM SMALL_ARRAY[20] AS BYTE       ' Create a small array of 20 elements
DIM VAR1 AS BYTE                  ' Create a standard BYTE variable
DIM LARGE_ARRAY[256] AS BYTE      ' Create a BYTE array of 256 elements
```

or

```
DIM ARRAY1[120] AS BYTE           ' Create an array of 120 elements
DIM ARRAY2[100] AS BYTE           ' Create another smaller array of 100 elements
```

If an array cannot be resolved, then a warning will be issued informing you of the offending line: **WARNING Array 'array name' is declared at address 'array address'. Which is over the 255 RAM address limit, and crosses BANK3 boundary!**

Ignoring this warning will spell certain failure of your program.

The following array declaration will produce a warning when compiled for a 16F877 device: -

```
DEVICE 16F877                ' Choose a PICmicro with extra RAM
DIM ARRAY1[200] AS BYTE      ' Create an array of 200 elements
DIM ARRAY2[100] AS BYTE      ' Create another smaller array of 100 elements
```

Examining the assembler code produced, will reveal that ARRAY1 starts at address 32 and finishes at address 295. This is acceptable and the compiler will not complain. Now look at ARRAY2, its start address is at 296 which is over the 255 address limit, thus producing a warning message.

The above warning is easily remedied by re-arranging the variable declaration list: -

```
DIM ARRAY2[100] AS BYTE            ' Create a small array of 100 elements
DIM ARRAY1[200] AS BYTE            ' Create an array of 200 elements
```

Again, examining the asm code produced, now reveals that ARRAY2 starts at address 32 and finishes at address 163. everything OK there then. And ARRAY1 starts at address 164 and finishes at address 427, again, its starting address was within the 255 limit so everything's OK there as well, even though the array itself crossed several BANKs. A simple re-arrangement of code meant the difference between a working and not working program.

Of course, the smaller PICmicro^{tm} devices do not have this limitation as they do not have 255 RAM cells anyway. Therefore, arrays may be located anywhere in the variable declaration list. The same goes for the 16-bit core devices, as these can address any area of their RAM.

16-bit core simplicity.

The 16-bit core devices i.e. PIC18XXX, have no such complexities in their memory map as the 14-bit core devices do. The memory is still banked, but each bank is 256 bytes in length, and runs linearly from one to the other. Add to that, the ability to access all RAM areas using indirect addressing, makes arrays extremely easy to use. If many large arrays are required in a program, then the 16-bit core devices (especially the Flash types) are highly recommended.

Once an array is created, its elements may be accessed numerically. Numbering starts at 0 and ends at n-1. For example: -

```
MYARRAY [3] = 57
PRINT "MYARRAY[3] = " , DEC MYARRAY[3]
```

The above example will access the fourth element in the **BYTE** array and display "MYARRAY[3] = 57" on the LCD. The true flexibility of arrays is that the index value itself may be a variable. For example: -

```
DEVICE 16F84                        ' We'll use a smaller device this time
DIM MYARRAY[10] AS BYTE             ' Create a 10-byte array.
DIM INDEX AS BYTE                   ' Create a normal BYTE variable.
FOR INDEX = 0 TO 9                  ' Repeat with INDEX= 0,1,2...9
```

```
MYARRAY[INDEX] = INDEX * 10          ' Write INDEX*10 to each element of the array.
NEXT
FOR INDEX = 0 TO 9                   ' Repeat with INDEX= 0,1,2...9
PRINT AT 1 , 1 , DEC MYARRAY [INDEX]        ' Show the contents of each element.
DELAYMS 500                          ' Wait long enough to view the values
NEXT
STOP
```

If the above program is run, 10 values will be displayed, counting from 0 to 90 i.e. INDEX * 10.

A word of caution regarding arrays: If you're familiar with other BASICs and have used their arrays, you may have run into the "subscript out of range" error. Subscript is simply another term for the index value. It is considered 'out-of range' when it exceeds the maximum value for the size of the array.

For example, in the example above, MYARRAY is a 10-element array. Allowable index values are 0 through 9. If your program exceeds this range, the compiler will not respond with an error message. Instead, it will access the next RAM location past the end of the array.

If you are not careful about this, it can cause all sorts of subtle anomalies, as previously loaded variables are overwritten. It's up to the programmer (you!) to help prevent this from happening.

Even more flexibility is allowed with arrays because the index value may also be an expression.

```
DEVICE 16F84                         ' We'll use a smaller device
DIM MYARRAY[10] AS BYTE              ' Create a 10-byte array.
DIM INDEX AS BYTE                    ' Create a normal BYTE variable.
FOR INDEX = 0 TO 8                   ' Repeat with INDEX= 0,1,2...8
MYARRAY[INDEX + 1] = INDEX * 10    ' Write INDEX*10 to each element of the array.
NEXT
FOR INDEX = 0 TO 8                          ' Repeat with INDEX= 0,1,2...8
PRINT AT 1 , 1 , DEC MYARRAY [INDEX + 1]  ' Show the contents of each element.
DELAYMS 500                                 ' Wait long enough to view the values
NEXT
STOP
```

The expression within the square braces should be kept simple, and arrays are not allowed as part of the expression.

Using Arrays in Expressions.

Of course, arrays are allowed within expressions themselves. For example: -

```
DIM MYARRAY[10] AS BYTE      ' Create a 10-byte array.
DIM INDEX AS BYTE            ' Create a normal BYTE variable.
DIM VAR1 AS BYTE             ' Create another BYTE variable
DIM Result AS BYTE           ' Create a variable to hold the result of the expression
INDEX = 5                    ' And INDEX now holds the value 5
VAR1 = 10                    ' Variable VAR1 now holds the value 10
MYARRAY[INDEX] = 20          ' Load the 6th element of MYARRAY with value 20
Result = ( VAR1 * MYARRAY[INDEX] ) / 20       ' Do a simple expression
PRINT AT 1 , 1 , DEC Result , " "              ' Display the result of the expression
STOP
```

The previous example will display 10 on the LCD, because the expression reads as: -

```
(10 * 20) / 20
```

VAR1 holds a value of 10, MYARRAY[INDEX] holds a value of 20, these two variables are multiplied together which will yield 200, then they're divided by the constant 20 to produce a result of 10.

Arrays as Strings

Arrays may also be used as simple strings in certain commands, because after all, a string is simply a byte array used to store text.

For this, the **STR** modifier is used.

The commands that support the **STR** modifier are: -

BUSOUT - **BUSIN**
HBUSOUT - **HBUSIN (PROTON+ Only)**
HRSOUT - **HRSIN (PROTON+ Only)**
OWRITE - **OREAD (PROTON+ Only)**
RSOUT - **RSIN**
SEROUT - **SERIN**
SHOUT - SHIN
PRINT

The **STR** modifier works in two ways, it outputs data from a pre-declared array in commands that send data i.e. RSOUT, PRINT etc, and loads data into an array, in commands that input information i.e. RSIN, SERIN etc. The following examples illustrate the **STR** modifier in each compatible command.

Using **STR** with the **BUSIN** and **BUSOUT** commands.

Refer to the sections explaining the BUSIN and BUSOUT commands.

Using **STR** with the **HBUSIN** and **HBUSOUT** commands.

Refer to the sections explaining the HBUSIN and HBUSOUT commands.

Using **STR** with the **RSIN** command.

```
DIM ARRAY1[10] AS BYTE          ' Create a 10-byte array named ARRAY1
RSIN STR ARRAY1                 ' Load 10 bytes of data directly into ARRAY1
```

Using **STR** with the **RSOUT** command.

```
DIM ARRAY1[10] AS BYTE          ' Create a 10-byte array named ARRAY1
RSOUT STR ARRAY1                ' Send 10 bytes of data directly from ARRAY1
```

Using **STR** with the **HRSIN** and **HRSOUT** commands.

Refer to the sections explaining the HRSOUT and HRSIN commands.

Using **STR** with the **SHOUT** command.

```
SYMBOL DTA = PORTA.0            ' Define the two lines for the SHOUT command
SYMBOL CLK = PORTA.1
DIM ARRAY1[10] AS BYTE          ' Create a 10-byte array named ARRAY1
' Send 10 bytes of data from ARRAY1
SHOUT DTA, CLK, MSBFIRST, [ STR ARRAY1 ]
```

Using **STR** with the **SHIN** command.

```
SYMBOL DTA = PORTA.0            ' Define the two lines for the SHIN command
SYMBOL CLK = PORTA.1
DIM ARRAY1[10] AS BYTE          ' Create a 10-byte array named ARRAY1
' Load 10 bytes of data directly into ARRAY1
SHIN DTA, CLK, MSBPRE , [ STR ARRAY1 ]
```

Using **STR** with the **PRINT** command.

```
DIM ARRAY1[10] AS BYTE          ' Create a 10-byte array named ARRAY1
PRINT STR ARRAY1                ' Send 10 bytes of data directly from ARRAY1
```

Using **STR** with the **SEROUT** and **SERIN** commands.

Refer to the sections explaining the **SERIN** and **SEROUT** commands.

Using **STR** with the **OREAD** and **OWRITE** commands.

Refer to the sections explaining the **OREAD** and **OWRITE** commands.

The **STR** modifier has two forms for variable-width and fixed-width data, shown below: -

STR bytearray ASCII string from bytearray until byte = 0 (NULL terminated).

Or array length is reached.

STR bytearray\n ASCII string consisting of n bytes from bytearray.

NULL terminated means that a zero (NULL) is placed at the end of the string of ASCII characters to signal that the string has finished.

The example below is the variable-width form of the **STR** modifier: -

```
DIM MYARRAY[5] AS BYTE      ' Create a 5 element array
MYARRAY[0] = "A"            ' Fill the array with ASCII
MYARRAY[1] = "B"
MYARRAY[2] = "C"
MYARRAY[3] = "D"
MYARRAY[4] = 0              ' Add the NULL Terminator
PRINT STR MYARRAY           ' Display the string
```

The code above displays "ABCD" on the LCD. In this form, the **STR** formatter displays each character contained in the byte array until it finds a character that is equal to 0 (value 0, not ASCII "0"). NOTE: If the byte array does not end with 0 (NULL), the compiler will read and output all RAM register contents until it cycles through all RAM locations for the declared length of the byte array.

For example, the same code as before without a NULL terminator is: -

```
DIM MYARRAY[4] AS BYTE       ' Create a 4 element array
MYARRAY[0] = "A"             ' Fill the array with ASCII
MYARRAY[1] = "B"
MYARRAY[2] = "C"
MYARRAY[3] = "D"
PRINT STR MYARRAY            ' Display the string
```

The code above will display the whole of the array, because the array was declared with only four elements, and each element was filled with an ASCII character i.e. "ABCD".

To specify a fixed-width format for the **STR** modifier, use the form **STR** MYARRAY\n; where MYARRAY is the byte array and n is the number of characters to display, or transmit. Changing the **PRINT** line in the examples above to: -

```
PRINT STR MYARRAY \ 2
```

would display "AB" on the LCD.

STR is not only used as a modifier, it is also a command, and is used for initially filling an array with data. The above examples may be re-written as: -

```
DIM MYARRAY[5] AS BYTE           ' Create a 5 element array
STR MYARRAY = "ABCD" , 0         ' Fill the array with ASCII, and NULL terminate it
PRINT STR MYARRAY                ' Display the string
```

Strings may also be copied into other strings: -

```
DIM String1[5] AS BYTE       ' Create a 5 element array
DIM String2[5] AS BYTE       ' Create another 5 element array
STR String1 = "ABCD" , 0     ' Fill the array with ASCII, and NULL terminate it
STR String2 = "EFGH" , 0     ' Fill the other array with ASCII, and NULL terminate it
STR String1 = STR String2    ' Copy String2 into String1
PRINT STR String1            ' Display the string
```

The above example will display "EFGH", because String1 has been overwritten by String2.

Using the **STR** command with **BUSOUT**, **HBUSOUT**, **SHOUT**, and **OWRITE** differs from using it with commands **SEROUT**, **PRINT**, **HRSOUT**, and **RSOUT** in that, the latter commands are used more for dealing with text, or ASCII data, therefore these are NULL terminated.

The **HBUSOUT**, **BUSOUT**, **SHOUT**, and **OWRITE** commands are not commonly used for sending ASCII data, and are more inclined to send standard 8-bit bytes. Thus, a NULL terminator would cut short a string of byte data, if one of the values happened to be a 0. So these commands will output data until the length of the array is reached, or a fixed length terminator is used i.e. MYARRAY\n.

Creating and using Strings

The PROTON+ compiler supports **STRING** variables, only when targeting a 16-bit core PICmicro^{tm} device.

The syntax to create a string is : -

DIM *String Name* **as STRING *** *String Length*

String Name can be any valid variable name. See **DIM** .
String Length can be any value up to 255, allowing up to 255 characters to be stored.

The line of code below will create a **STRING** named ST that can hold 20 characters: -

```
DIM ST as STRING * 20
```

Two or more strings can be concatenated (linked together) by using the plus (**+**) operator: -

```
DEVICE = 18F452                                    ' Must be a 16-bit core device for Strings
' Create three strings capable of holding 20 characters
DIM DEST_STRING as STRING * 20
DIM SOURCE_STRING1 as STRING * 20
DIM SOURCE_STRING2 as STRING * 20

SOURCE_STRING1 = "HELLO "  ' Load String SOURCE_STRING1 with the text HELLO
' Load String SOURCE_STRING2 with the text WORLD
SOURCE_STRING2 = "WORLD"
' Add both Source Strings together. Place result into String DEST_STRING
DEST_STRING= SOURCE_STRING1+ SOURCE_STRING2
```

The String DEST_STRING now contains the text "HELLO WORLD", and can be transmitted serially or displayed on an LCD: -

```
PRINT DEST_STRING
```

The Destination String itself can be added to if it is placed as one of the variables in the addition expression. For example, the above code could be written as: -

```
DEVICE = 18F452                          ' Must be a 16-bit core device for Strings
DIM DEST_STRING as STRING * 20 ' Create a String capable of holding 20 characters
' Create another String capable of holding 20 characters
DIM SOURCE_STRING as STRING * 20

DEST_STRING = "HELLO "        ' Pre-load String DEST_STRING with the text HELLO
SOURCE_STRING = "WORLD"   ' Load String SOURCE_STRING with the text WORLD
' Concatenate DEST_STRING with SOURCE_STRING
DEST_STRING = DEST_STRING + SOURCE_STRING
PRINT DEST_STRING                        ' Display the result which is "HELLO WORLD"
STOP
```

Note that Strings cannot be subtracted, multiplied or divided, and cannot be used as part of a regular expression otherwise a syntax error will be produced.

It's not only other strings that can be added to a string, the functions **CSTR**, **ESTR**, **MID$**, **LEFT$**, **RIGHT$**, **STR$**, **TOUPPER**, and **TOLOWER** can also be used as one of variables to concatenate.

A few examples of using these functions are shown below: -

CSTR Example

```
' Use the CSTR function in order to place a code memory string into a String variable

        DEVICE = 18F452                              ' Must be a 16-bit core device for Strings
        DIM DEST_STRING as STRING * 20 ' Create a String capable of holding 20 characters
        DIM SOURCE_STRING as STRING * 20 ' Create another String
        SOURCE_STRING = "HELLO "                     ' Load the string with characters
        DEST_STRING = SOURCE_STRING + CSTR CODE_STR  ' Concatenate the string
        PRINT DEST_STRING                    ' Display the result which is "HELLO WORLD"
        STOP
CODE_STR:
        CDATA "WORLD",0
```

The above example is really only for demonstration because if a LABEL name is placed as one of the parameters in a string concatenation, an automatic (more efficient) **CSTR** operation will be carried out. Therefore the above example should be written as: -

More efficient Example of above code

```
' Place a code memory string into a String variable more efficiently than using CSTR

        DEVICE = 18F452                              ' Must be a 16-bit core device for Strings
        DIM DEST_STRING as STRING * 20 ' Create a String capable of holding 20 characters
        DIM SOURCE_STRING as STRING * 20             ' Create another String

        SOURCE_STRING = "HELLO "                     ' Load the string with characters
        DEST_STRING = SOURCE_STRING + CODE_STR  ' Concatenate the string
        PRINT DEST_STRING                    ' Display the result which is "HELLO WORLD"
        STOP
CODE_STR:
        CDATA "WORLD",0
```

A NULL terminated string of characters held in DATA (on-board eeprom) memory can also be loaded or concatenated to a string by using the **ESTR** function: -

ESTR Example

```
' Use the ESTR function in order to place a DATA memory string into a String variable
' Remember to place EDATA before the main code, so it's recognised as a constant value

        DEVICE = 18F452                              ' Must be a 16-bit core device for Strings
        DIM DEST_STRING as STRING * 20 ' Create a String capable of holding 20 characters
        DIM SOURCE_STRING as STRING * 20             ' Create another String

DATA_STR EDATA "WORLD",0          ' Create a string in DATA memory named DATA_STR
        SOURCE_STRING = "HELLO "                     ' Load the string with characters
        DEST_STRING = SOURCE_STRING + ESTR DATA_STR   ' Concatenate the string
        PRINT DEST_STRING                    ' Display the result which is "HELLO WORLD"
        STOP
```

Converting an integer or floating point value into a string is accomplished by using the **STR$** function: -

STR$ Example

' Use the STR$ function in order to concatenate an integer value into a String variable

```
DEVICE = 18F452                         ' Must be a 16-bit core device for Strings
DIM DEST_STRING as STRING * 30 ' Create a String capable of holding 30 characters
DIM SOURCE_STRING as STRING * 20        ' Create another String
DIM WRD1 as WORD                        ' Create a Word variable

WRD1 = 1234                             ' Load the Word variable with a value
SOURCE_STRING = "VALUE = "              ' Load the string with characters
DEST_STRING = SOURCE_STRING + STR$ (DEC WRD1) ' Concatenate the string
PRINT DEST_STRING                  ' Display the result which is "VALUE = 1234"
STOP
```

LEFT$ Example

' Copy 5 characters from the left of SOURCE_STRING and add to a quoted character string

```
DEVICE = 18F452                         ' Must be a 16-bit core device for Strings
DIM SOURCE_STRING as STRING * 20        ' Create a String
DIM DEST_STRING as STRING * 20          ' Create another String

SOURCE_STRING = "HELLO WORLD"           ' Load the source string with characters
DEST_STRING = LEFT$ (SOURCE_STRING , 5) + " WORLD"
PRINT DEST_STRING                  ' Display the result which is "HELLO WORLD"
STOP
```

RIGHT$ Example

' Copy 5 characters from the right of SOURCE_STRING and add to a quoted character string

```
DEVICE = 18F452                         ' Must be a 16-bit core device for Strings
DIM SOURCE_STRING as STRING * 20        ' Create a String
DIM DEST_STRING as STRING * 20          ' Create another String

SOURCE_STRING = "HELLO WORLD"           ' Load the source string with characters
DEST_STRING = "HELLO " + RIGHT$ (SOURCE_STRING , 5)
PRINT DEST_STRING                  ' Display the result which is "HELLO WORLD"
STOP
```

MID$ Example

' Copy 5 characters from position 4 of SOURCE_STRING and add to quoted character strings

```
DEVICE = 18F452                         ' Must be a 16-bit core device for Strings
DIM SOURCE_STRING as STRING * 20        ' Create a String
DIM DEST_STRING as STRING * 20          ' Create another String

SOURCE_STRING = "HELLO WORLD"           ' Load the source string with characters
DEST_STRING = "HEL" + MID$ (SOURCE_STRING , 4 , 5) + "RLD"
PRINT DEST_STRING                  ' Display the result which is "HELLO WORLD"
STOP
```

Converting a string into uppercase or lowercase is accomplished by the functions **TOUPPER** and **TOLOWER**: -

TOUPPER Example

' Convert the characters in SOURCE_STRING to upper case

```
DEVICE = 18F452                           ' Must be a 16-bit core device for Strings
DIM SOURCE_STRING as STRING * 20          ' Create a String
DIM DEST_STRING as STRING * 20            ' Create another String

SOURCE_STRING = "hello world"  ' Load the source string with lowercase characters
DEST_STRING = TOUPPER(SOURCE_STRING )
PRINT DEST_STRING                    ' Display the result which is "HELLO WORLD"
STOP
```

TOLOWER Example

' Convert the characters in SOURCE_STRING to lower case

```
DEVICE = 18F452                           ' Must be a 16-bit core device for Strings
DIM SOURCE_STRING as STRING * 20          ' Create a String
DIM DEST_STRING as STRING * 20            ' Create another String

SOURCE_STRING = "HELLO WORLD"  ' Load the string with uppercase characters
DEST_STRING = TOLOWER(SOURCE_STRING )
PRINT DEST_STRING                    ' Display the result which is "hello world"
STOP
```

Loading a String Indirectly

If the Source String is a **BYTE**, **WORD**, **BYTE_ARRAY**, **WORD_ARRAY** or **FLOAT** variable, the value contained within the variable is used as a pointer to the start of the Source String's address in RAM.

Example

' Copy SOURCE_STRING into DEST_STRING using a pointer to SOURCE_STRING

```
DEVICE = 18F452                           ' Must be a 16-bit core device for Strings
DIM SOURCE_STRING as STRING * 20          ' Create a String
DIM DEST_STRING as STRING * 20            ' Create another String
 ' Create a WORD variable to hold the address of SOURCE_STRING
DIM STRING_ADDR as WORD

SOURCE_STRING = "HELLO WORLD"             ' Load the source string with characters
' Locate the start address of SOURCE_STRING in RAM
STRING_ADDR = VARPTR (SOURCE_STRING)
DEST_STRING = STRING_ADDR                 ' Source string into the destination string
PRINT DEST_STRING                    ' Display the result, which will be "HELLO"
STOP
```

Slicing a STRING into pieces.

Each position within the string can be accessed the same as a **BYTE ARRAY** by using square braces: -

```
DEVICE = 18F452                              ' Must be a 16-bit core device for Strings
DIM SOURCE_STRING as STRING * 20             ' Create a String

SOURCE_STRING[0] = "H"        ' Place the letter "H" as the first character in the string
SOURCE_STRING[1] = "E"        ' Place the letter "E" as the second character
SOURCE_STRING[2] = "L"        ' Place the letter "L" as the third character
SOURCE_STRING[3] = "L"        ' Place the letter "L" as the fourth character
SOURCE_STRING[4] = "O"        ' Place the letter "O" as the fifth character
SOURCE_STRING[5] = 0          ' Add a NULL to terminate the string

PRINT SOURCE_STRING                     ' Display the string, which will be "HELLO"
STOP
```

The example above demonstrates the ability to place individual characters anywhere in the string. Of course, you wouldn't use the code above in an actual BASIC program.

A string can also be read character by character by using the same method as shown above: -

```
DEVICE = 18F452                              ' Must be a 16-bit core device for Strings
DIM SOURCE_STRING as STRING * 20             ' Create a String
DIM VAR1 as BYTE

SOURCE_STRING = "HELLO"                      ' Load the source string with characters
' Copy character 1 from the source string and place it into VAR1
VAR1 = SOURCE_STRING[1]
PRINT VAR1          ' Display the character extracted from the string. Which will be "E"
STOP
```

When using the above method of reading and writing to a string variable, the first character in the string is referenced at 0 onwards, just like a **BYTE ARRAY**.

The example below shows a more practical STRING slicing demonstration.

```
' Display a string's text by examining each character individually
        DEVICE = 18F452                              ' Must be a 16-bit core device for Strings
        DIM SOURCE_STRING as STRING * 20             ' Create a String
        DIM CHARPOS as BYTE                          ' Holds the position within the string

        SOURCE_STRING = "HELLO WORLD"                ' Load the source string with characters
        CHARPOS = 0                                  ' Start at position 0 within the string
        REPEAT                                       ' Create a loop
        ' Display the character extracted from the string
          PRINT SOURCE_STRING[CHARPOS]
          INC CHARPOS                           ' Move to the next position within the string
        ' Keep looping until the end of the string is found
        UNTIL CHARPOS = LEN (SOURCE_STRING)
        STOP
```

Notes

A word of caution regarding Strings: If you're familiar with interpreted BASICs and have used their String variables, you may have run into the "subscript out of range" error. This error occurs when the amount of characters placed in the string exceeds its maximum size.

For example, in the examples above, most of the strings are capable of holding 20 characters. If your program exceeds this range by trying to place 21 characters into a string only created for 20 characters, the compiler will not respond with an error message. Instead, it will access the next RAM location past the end of the String.

If you are not careful about this, it can cause all sorts of subtle anomalies, as previously loaded variables are overwritten. It's up to the programmer (you!) to help prevent this from happening by ensuring that the **STRING** in question is large enough to accommodate all the characters required, but not too large that it uses up too much precious RAM.

The compiler will help by giving a reminder message when appropriate, but this can be ignored if you are confident that the **STRING** is large enough.

See also : **Creating and using VIRTUAL STRINGS with CDATA**
Creating and using VIRTUAL STRINGS with EDATA
CDATA, LEN, LEFT$, MID$, RIGHT$
STRING Comparisons, STR$, TOLOWER, TOUPPER, VARPTR .

Creating and using VIRTUAL STRINGS with CDATA

Some PICmicros such as the 16F87x range and all the 18FXXX range, have the ability to read and write to their own flash memory. And although writing to this memory too many times is unhealthy for the PICmicro^{tm}, reading this memory is both fast, and harmless. Which offers a unique form of data storage and retrieval, the **CDATA** command proves this, as it uses the mechanism of reading and storing in the PICmicro's flash memory.

Combining the unique features of the 'self modifying PICmicros ' with a string format, the compiler is capable of reducing the overhead of printing, or transmitting large amounts of text data. The **CSTR** modifier may be used in commands that deal with text processing i.e. **PRINT**, **SEROUT**, **HRSOUT**, and **RSOUT** .

The **CSTR** modifier is used in conjunction with the **CDATA** command. The **CDATA** command is used for initially creating the string of characters: -

```
STRING1: CDATA "HELLO WORLD" , 0
```

The above line of code will create, in flash memory, the values that make up the ASCII text "HELLO WORLD", at address STRING1. Note the NULL terminator after the ASCII text.

NULL terminated means that a zero (NULL) is placed at the end of the string of ASCII characters to signal that the string has finished.

To display, or transmit this string of characters, the following command structure could be used:

```
PRINT CSTR STRING1
```

The label that declared the address where the list of **CDATA** values resided, now becomes the string's name. In a large program with lots of text formatting, this type of structure can save quite literally hundreds of bytes of valuable code space.

Try both these small programs, and you'll see that using **CSTR** saves a few bytes of code: -

First the standard way of displaying text: -

```
DEVICE 16F877
CLS
PRINT "HELLO WORLD"
PRINT "HOW ARE YOU?"
PRINT "I AM FINE!"
STOP
```

Now using the **CSTR** modifier: -

```
CLS
PRINT CSTR TEXT1
PRINT CSTR TEXT2
PRINT CSTR TEXT3
STOP

TEXT1: CDATA "HELLO WORLD" , 0
TEXT2: CDATA "HOW ARE YOU?" , 0
TEXT3: CDATA "I AM FINE!" , 0
```

Again, note the NULL terminators after the ASCII text in the **CDATA** commands. Without these, the PICmicro^{tm} will continue to transmit data in an endless loop.

The term 'virtual string' relates to the fact that a string formed from the **CDATA** command cannot (rather should not) be written too, but only read from.

Not only label names can be used with the **CSTR** modifier, constants, variables and expressions can also be used that will hold the address of the **CDATA** 's label (a pointer). For example, the program below uses a **WORD** size variable to hold 2 pointers (address of a label, variable or array) to 2 individual NULL terminated text strings formed by **CDATA** .

```
' Use the PROTON development board for the example
        INCLUDE "PROTON_4.INC"
        DIM ADDRESS AS WORD          ' Pointer variable

        DELAYMS 200                  ' Wait for PICmicro to stabilise
        CLS                          ' Clear the LCD

        ADDRESS = STRING1            ' Point address to string 1
        PRINT CSTR ADDRESS           ' Display string 1
        ADDRESS = STRING2            ' Point ADDRESS to string 2
        PRINT CSTR ADDRESS           ' Display string 2
        STOP

' Create the text to display
STRING1:
        CDATA "HELLO ", 0
STRING2:
        CDATA "WORLD", 0
```

Creating and using VIRTUAL Strings with EDATA

Some 14-bit core and all 16-bit core PICmicros have on-board eeprom memory, and although writing to this memory too many times is unhealthy for the PICmicro^{tm}, reading this memory is both fast and harmless. Which offers a great place for text storage and retrieval.

Combining the eeprom memory of PICmicros with a string format, the compiler is capable of reducing the overhead of printing, or transmitting large amounts of text data using a memory resource that is very often left unused and ignored. The **ESTR** modifier may be used in commands that deal with text processing i.e. **PRINT**, **SEROUT**, **HRSOUT**, and **RSOUT** and **STRING** handling etc.

The **ESTR** modifier is used in conjunction with the **EDATA** command, which is used to initially create the string of characters: -

```
STRING1 EDATA "HELLO WORLD" , 0
```

The above line of code will create, in eeprom memory, the values that make up the ASCII text "HELLO WORLD", at address STRING1 in DATA memory. Note the NULL terminator after the ASCII text.

To display, or transmit this string of characters, the following command structure could be used:

```
    PRINT ESTR STRING1
```

The identifier that declared the address where the list of **EDATA** values resided, now becomes the string's name. In a large program with lots of text formatting, this type of structure can save many bytes of valuable code space.

Try both these small programs, and you'll see that using **ESTR** saves code space: -

First the standard way of displaying text: -

```
    DEVICE 16F877
    CLS
    PRINT "HELLO WORLD"
    PRINT "HOW ARE YOU?"
    PRINT "I AM FINE!"
    STOP
```

Now using the **ESTR** modifier: -

```
TEXT1 EDATA "HELLO WORLD" , 0
TEXT2 EDATA "HOW ARE YOU?" , 0
TEXT3 EDATA "I AM FINE!" , 0

    CLS
    PRINT ESTR TEXT1
    PRINT ESTR TEXT2
    PRINT ESTR TEXT3
    STOP
```

Again, note the NULL terminators after the ASCII text in the **EDATA** commands. Without these, the PICmicro^{tm} will continue to transmit data in an endless loop.

The term 'virtual string' relates to the fact that a string formed from the **EDATA** command cannot (rather should not) be written to often, but can be read as many times as wished without causing harm to the device.

Not only identifiers can be used with the **ESTR** modifier, constants, variables and expressions can also be used that will hold the address of the **EDATA**'s identifier (a pointer). For example, the program below uses a **BYTE** size variable to hold 2 pointers (address of a variable or array) to 2 individual NULL terminated text strings formed by **EDATA** .

```
    ' Use the PROTON development board for the example
    INCLUDE "PROTON_4.INC"

    DIM ADDRESS AS WORD             ' Pointer variable
' Create the text to display in eeprom memory
STRING1 EDATA "HELLO ", 0
STRING2 EDATA "WORLD", 0

    DELAYMS 200                     ' Wait for PICmicro to stabilise
    CLS                             ' Clear the LCD
    ADDRESS = STRING1               ' Point address to string 1
    PRINT ESTR ADDRESS              ' Display string 1
    ADDRESS = STRING2               ' Point ADDRESS to string 2
    PRINT ESTR ADDRESS              ' Display string 2
    STOP
```

Notes

Note that the identifying text MUST be located on the same line as the **EDATA** directive or a syntax error will be produced. It must also NOT contain a postfix colon as does a line label or it will be treat as a line label. Think of it as an alias name to a constant.

Any **EDATA** directives MUST be placed at the head of the BASIC program as is done with SYMBOLS, so that the name is recognised by the rest of the program as it is parsed. There is no need to jump over **EDATA** directives as you have to with **LDATA** or **CDATA**, because they do not occupy code memory, but reside in high *DATA* memory.

STRING Comparisons

Just like any other variable type, **STRING** variables can be used within comparisons such as **IF-THEN**, **REPEAT-UNTIL**, and **WHILE-WEND** . In fact, it's an essential element of any programming language. However, there are a few rules to obey because of the PICmicro's architecture.

Equal (=)or Not Equal (<>) comparisons are the only type that apply to STRINGS, because one **STRING** can only ever be equal or not equal to another **STRING**. It would be unusual (unless your using the C language) to compare if one **STRING** was greater or less than another.

So a valid comparison could look something like the lines of code below: -

```
        IF STRING1 = STRING2 THEN PRINT "EQUAL" : ELSE PRINT "NOT EQUAL"
```

or

```
        IF STRING1 <> STRING2 THEN PRINT "NOT EQUAL" : ELSE PRINT "EQUAL"
```

But as you've found out if you read the **Creating STRINGs** section, there is more than one type of **STRING** in a PICmicro^{tm}. There is a **STRING** variable, a code memory string, and a quoted character string .

Note that pointers to **STRING** variables are not allowed in comparisons, and a syntax error will be produced if attempted.

Starting with the simplest of string comparisons, where one string variable is compared to another string variable. The line of code would look similar to either of the two lines above.

Example 1

' Simple string variable comparison

```
        DEVICE = 18F452                        ' Must be a 16-bit core device for Strings
        DIM STRING1 as STRING * 20    ' Create a String capable of holding 20 characters
        DIM STRING2 as STRING * 20             ' Create another String

        CLS
        STRING1 = "EGGS"                       ' Pre-load String STRING1 with the text EGGS
        STRING2 = "BACON"                      ' Load String STRING2 with the text BACON

        IF STRING1 = STRING2 THEN              ' Is STRING1 equal to STRING2 ?
          PRINT AT 1,1, "EQUAL"                ' Yes. So display EQUAL on line 1 of the LCD
        ELSE                                   ' Otherwise
          PRINT AT 1,1, "NOT EQUAL"            ' Display NOT EQUAL on line 1 of the LCD
        ENDIF

        STRING2 = "EGGS"                       ' Now make the strings the same as each other
        IF STRING1 = STRING2 THEN              ' Is STRING1 equal to STRING2 ?
          PRINT AT 2,1, "EQUAL"                ' Yes. So display EQUAL on line 2 of the LCD
        ELSE                                   ' Otherwise
          PRINT AT 2,1, "NOT EQUAL"            ' Display NOT EQUAL on line 2 of the LCD
        ENDIF
        STOP
```

The example above will display NOT EQUAL on line one of the LCD because STRING1 contains the text "EGGS" while STRING2 contains the text "BACON", so they are clearly not equal.

Line two of the LCD will show EQUAL because STRING2 is then loaded with the text "EGGS" which is the same as STRING1, therefore the comparison is equal.

A similar example to the one above uses a quoted character string instead of one of the **STRING** variables.

Example 2
' String variable to Quoted character string comparison

```
DEVICE = 18F452                      ' Must be a 16-bit core device for Strings
DIM STRING1 as STRING * 20    ' Create a String capable of holding 20 characters

CLS
STRING1 = "EGGS"                     ' Pre-load String STRING1 with the text EGGS

IF STRING1 = "BACON" THEN            ' Is STRING1 equal to "BACON" ?
  PRINT AT 1,1, "EQUAL"              ' Yes. So display EQUAL on line 1 of the LCD
ELSE                                 ' Otherwise
  PRINT AT 1,1, "NOT EQUAL"          ' Display NOT EQUAL on line 1 of the LCD
ENDIF

IF STRING1 = "EGGS" THEN             ' Is STRING1 equal to "EGGS" ?
  PRINT AT 2,1, "EQUAL"              ' Yes. So display EQUAL on line 2 of the LCD
ELSE                                 ' Otherwise
  PRINT AT 2,1, "NOT EQUAL"          ' Display NOT EQUAL on line 2 of the LCD
ENDIF
STOP
```

The example above produces exactly the same results as example1 because the first comparison is clearly not equal, while the second comparison is equal.

Example 3
' Use a string comparison in a REPEAT-UNTIL loop

```
DEVICE = 18F452                      ' Must be a 16-bit core device for Strings
DIM SOURCE_STRING as STRING * 20           ' Create a String
DIM DEST_STRING as STRING * 20             ' Create another String
DIM CHARPOS as Byte                        ' Character position within the strings

CLS
CLEAR DEST_STRING                    ' Fill DEST_STRING with NULLs
SOURCE_STRING = "HELLO"              ' Load String SOURCE_STRING with the text HELLO

REPEAT                               ' Create a loop
  ' Copy SOURCE_STRING into DEST_STRING one character at a time
  DEST_STRING[CHARPOS] = SOURCE_STRING[CHARPOS]
  INC CHARPOS                        ' Move to the next character in the strings
' Stop when DEST_STRING is equal to the text "HELLO"
UNTIL DEST_STRING = "HELLO"
PRINT DEST_STRING                    ' Display DEST_STRING
STOP
```

Example 4

```
' Compare a string variable to a string held in code memory
        DEVICE = 18F452                         ' Must be a 16-bit core device for Strings
        DIM STRING1 as STRING * 20    ' Create a String capable of holding 20 characters

        CLS
        STRING1 = "BACON"                       ' Pre-load String STRING1 with the text BACON
        IF CODE_STRING= "BACON" THEN            ' Is CODE_STRING equal to "BACON" ?
          PRINT AT 1,1, "EQUAL"                 ' Yes. So display EQUAL on line 1 of the LCD
        ELSE                                    ' Otherwise
          PRINT AT 1,1, "NOT EQUAL"             ' Display NOT EQUAL on line 1 of the LCD
        ENDIF

        STRING1 = "EGGS"                        ' Pre-load String STRING1 with the text EGGS
        IF STRING1 = CODE_STRING THEN           ' Is STRING1 equal to CODE_STRING ?
          PRINT AT 2,1, "EQUAL"                 ' Yes. So display EQUAL on line 2 of the LCD
        ELSE                                    ' Otherwise
          PRINT AT 2,1, "NOT EQUAL"             ' Display NOT EQUAL on line 2 of the LCD
        ENDIF
        STOP

CODE_STRING: CDATA "EGGS" , 0
```

Example 5

```
' String comparisons using SELECT-CASE
        DEVICE = 18F452                         ' Must be a 16-bit core device for Strings
        DIM STRING1 as STRING * 20    ' Create a String capable of holding 20 characters

        CLS
        STRING1 = "EGGS"                        ' Pre-load String STRING1 with the text EGGS
        SELECT STRING1                          ' Start comparing the string
          CASE "EGGS"                           ' Is STRING1 equal to EGGS?
            PRINT AT 1,1,"FOUND EGGS"
          CASE "BACON"                          ' Is STRING1 equal to BACON?
            PRINT AT 1,1,"FOUND BACON"
          CASE "COFFEE"                         ' Is STRING1 equal to COFFEE?
            PRINT AT 1,1,"FOUND COFFEE"
          CASE ELSE                             ' Default to...
            PRINT AT 1,1,"NO MATCH"             ' Displaying no match
   ENDSELECT
   STOP
```

See also : **Creating and using STRINGS**
Creating and using VIRTUAL STRINGS with CDATA
CDATA, IF-THEN-ELSE-ENDIF, REPEAT-UNTIL
SELECT-CASE, WHILE-WEND .

Relational Operators

Relational operators are used to compare two values. The result can be used to make a decision regarding program flow.

The list below shows the valid relational operators accepted by the compiler:

Operator	Relation	Expression Type
=	Equality	X = Y
==	Equality	X == Y (Same as above Equality)
<>	Inequality	X <> Y
!=	Inequality	X != Y (Same as above Inequality)
<	Less than	X < Y
>	Greater than	X > Y
<=	Less than or Equal to	X <= Y
>=	Greater than or Equal to	X >= Y

See also : **IF-THEN-ELSE-ENDIF, REPEAT-UNTIL, SELECT-CASE, WHILE-WEND.**

Boolean Logic Operators

The **IF-THEN-ELSE-ENDIF**, **WHILE-WEND**, and **REPEAT-UNTIL** conditions now support the logical operators **NOT**, **AND**, **OR**, and **XOR**. The **NOT** operator inverts the outcome of a condition, changing false to true, and true to false. The following two **IF-THEN** conditions are equivalent: -

```
        IF VAR1 <> 100 THEN NotEqual           ' Goto notEqual if VAR1 is not 100.
        IF NOT VAR1 = 100 THEN NotEqual        ' Goto notEqual if VAR1 is not 100.
```

The operators **AND**, **OR**, and **XOR** join the results of two conditions to produce a single true/false result. **AND** and **OR** work the same as they do in everyday speech. Run the example below once with **AND** (as shown) and again, substituting **OR** for **AND**: -

```
        DIM VAR1 AS BYTE
        DIM VAR2 AS BYTE
        CLS
        VAR1 = 5
        VAR2 = 9
        IF VAR1 = 5 AND VAR2 = 10 THEN Res_True
        STOP
Res_True:
        PRINT "RESULT IS TRUE."
        STOP
```

The condition "VAR1 = 5 **AND** VAR2 = 10" is not true. Although VAR1 is 5, VAR2 is not 10. **AND** works just as it does in plain English, both conditions must be true for the statement to be true. **OR** also works in a familiar way; if one or the other or both conditions are true, then the statement is true. **XOR** (short for exclusive-OR) may not be familiar, but it does have an English counterpart: If one condition or the other (but not both) is true, then the statement is true.

Parenthesis (or rather the lack of it!).

Every compiler has it's quirky rules, and the PROTON+ compiler is no exception. One of its quirks means that parenthesis is not supported in a Boolean condition, or indeed with any of the **IF-THEN-ELSE-ENDIF**, **WHILE-WEND**, and **REPEAT-UNTIL** conditions. Parenthesis in an expression within a condition is allowed however. So, for example, the expression: -

```
        IF (VAR1 + 3) = 10 THEN do something.          Is allowed.
```

But: -

```
        IF( (VAR1 + 3) = 10) THEN do something.        Is NOT allowed.
```

The Boolean operands do have a precedence in a condition. The **AND** operand has the highest priority, then the **OR**, then the **XOR**. This means that a condition such as: -

```
        IF VAR1 = 2 AND VAR2 = 3 OR VAR3 = 4 THEN do something
```

Will compare VAR1 and VAR2 to see if the **AND** condition is true. It will then see if the **OR** condition is true, based on the result of the **AND** condition.

THEN operand always required.

The PROTON+ compiler relies heavily on the **THEN** part. Therefore, if the **THEN** part of a condition is left out of the code listing, a SYNTAX ERROR will be produced.

MATH OPERATORS

The PROTON+ compiler performs all math operations in full hierarchal order. Which means that there is precedence to the operators. For example, multiplies and divides are performed before adds and subtracts. To ensure the operations are carried out in the correct order use parenthesis to group the operations: -

```
A = (( B - C ) * ( D + E )) / F
```

All math operations are signed or unsigned depending on the variable type used, and performed with 16, or 32-bit precision, again, depending on the variable types and constant values used in the expression.

The operators supported are: -

Addition '+'.	Adds variables and/or constants.
Subtraction '-'.	Subtracts variables and/or constants.
Multiply '*'.	Multiplies variables and/or constants.
Multiply HIGH ''.**	Returns the high 16 bits of the 16-bit multiply result.
Multiply MIDDLE '*/'.	Returns the middle 16 bits of the 16-bit multiply result.
Divide '/'.	Divides variables and/or constants.
Modulus '//'.	Returns the remainder after dividing one value by another.
Bitwise AND '&'.	Returns the bitwise AND of two values.
Bitwise OR '|'.	Returns the bitwise OR of two values.
Bitwise XOR '^'.	Returns the bitwise XOR of two values.
Bitwise SHIFT LEFT '<<'.	Shifts the bits of a value left a specified number of places.
Bitwise SHIFT RIGHT '>>'.	Shifts the bits of a value right a specified number of places.
Bitwise Complement '~'.	Reverses the bits in a variable.
ABS.	Returns the absolute value of a number.
ACOS	Returns the ARC COSINE of a value in RADIANS.
ASIN	Returns the ARC SINE of a value in RADIANS.
ATAN	Returns the ARC TANGENT of a value in RADIANS.
COS.	Returns the COSINE of a value in RADIANS.
DCD.	2 n -power decoder of a four-bit value.
DIG.	Returns the specified decimal digit of a positive value.
EXP	Deduce the exponential function of a value.
LOG	Returns the NATURAL LOG of a value.
LOG10	Returns the LOG of a value.
MAX.	Returns the maximum of two numbers.
MIN.	Returns the minimum of two numbers.
NCD.	Priority encoder of a 16-bit value.
POW	Computes a Variable to the power of another.
REV.	Reverses the order of the lowest bits in a value.
SIN.	Returns the SINE of a value in RADIANS.
SQR.	Returns the SQUARE ROOT of a value.
TAN	Returns the TANGENT of a value in RADIANS.
DIV32.	15-bit x 31 bit divide. (For PBP compatibility only)

ADD '+'.

Syntax
Assignment Variable = Variable **+** *Variable*

Overview
Adds variables and/or constants, returning an 8, 16, 32-bit or floating point result.

Operators
Assignment Variable can be any valid variable type.
Variable can be a constant, variable or expression.

Addition works exactly as you would expect with signed and unsigned integers as well as floating point.

```
    DIM Value1 as WORD
    DIM Value2 as WORD
    Value1 = 1575
    Value2 = 976
    Value1 = Value1 + Value2        ' Add the numbers.
    PRINT DEC Value1                ' Display the result
```

```
' 32-bit addition
    DIM Value1 as WORD
    DIM Value2 as DWORD
    Value1 = 1575
    Value2 = 9763647
    Value2 = Value2 + Value1        ' Add the numbers.
    PRINT DEC Value1                ' Display the result
```

SUBTRACT '-'.

Syntax
Assignment Variable = Variable **-** *Variable*

Overview
Subtracts variables and/or constants, returning an 8, 16, 32-bit or floating point result.

Operators
Assignment Variable can be any valid variable type.
Variable can be a constant, variable or expression.

Subtract works exactly as you would expect with signed and unsigned integers as well as floating point.

```
    DIM Value1 as WORD
    DIM Value2 as WORD
    Value1 = 1000
    Value2 = 999
    Value1 = Value1 - Value2        ' Subtract the numbers.
    PRINT DEC Value1                ' Display the result
```

```
' 32-bit subtraction
        DIM Value1 as WORD
        DIM Value2 as DWORD
        Value1 = 1575
        Value2 = 9763647
        Value2 = Value2 - Value1        ' Subtract the numbers.
        PRINT DEC Value1                ' Display the result

' 32-bit signed subtraction
        DIM Value1 as DWORD
        DIM Value2 as DWORD
        Value1 = 1575
        Value2 = 9763647
        Value1 = Value1 - Value2        ' Subtract the numbers.
        PRINT SDEC Value1               ' Display the result
```

MULTIPLY '*'.

Syntax

Assignment Variable = Variable * *Variable*

Overview

Multiplies variables and/or constants, returning an 8, 16, 32-bit or floating point result.

Operators

Assignment Variable can be any valid variable type.
Variable can be a constant, variable or expression.

Multiply works exactly as you would expect with signed or unsigned integers from -2147483648 to +2147483647 as well as floating point. If the result of multiplication is larger than 2147483647 when using 32-bit variables, the excess bit will be lost.

```
        DIM Value1 as WORD
        DIM Value2 as WORD
        Value1 = 1000
        Value2 = 19
        Value1 = Value1 * Value2        ' Multiply Value1 by Value2.
        PRINT DEC Value1                ' Display the result

' 32-bit multiplication
        DIM Value1 as WORD
        DIM Value2 as DWORD
        Value1 = 100
        Value2 = 10000
        Value2 = Value2 * Value1        ' Multiply the numbers.
        PRINT DEC Value1                ' Display the result
```

MULTIPLY HIGH '**'.

Syntax

Assignment Variable = Variable ** *Variable*

Overview

Multiplies 8 or 16-bit variables and/or constants, returning the high 16 bits of the result.

Operators

Assignment Variable can be any valid variable type.
Variable can be a constant, variable or expression.

When multiplying two 16-bit values, the result can be as large as 32 bits. Since the largest variable supported by the compiler is 16-bits, the highest 16 bits of a 32-bit multiplication result are normally lost. The ** (double-star) operand produces these upper 16 bits.

For example, suppose 65000 ($FDE8) is multiplied by itself. The result is 4,225,000,000 or $FBD46240. The * (star, or normal multiplication) instruction would return the lower 16 bits, $6240. The ** instruction returns $FBD4.

```
DIM Value1 as WORD
DIM Value2 as WORD
Value1 = $FDE8
Value2 = Value1 ** Value1          ' Multiply $FDE8 by itself
PRINT HEX Value2                   ' Return high 16 bits.
```

Notes.

This operand enables compatibility with BASIC STAMP code, and melab's compiler code, but is rather obsolete considering the 32-bit capabilities of the PROTON+ compiler.

MULTIPLY MIDDLE '*/'.

Syntax

Assignment Variable = Variable */ *Variable*

Overview

Multiplies variables and/or constants, returning the middle 16 bits of the 32-bit result.

Operators

Assignment Variable can be any valid variable type.
Variable can be a constant, variable or expression.

The Multiply Middle operator (*/) has the effect of multiplying a value by a whole number and a fraction. The whole number is the upper byte of the multiplier (0 to 255 whole units) and the fraction is the lower byte of the multiplier (0 to 255 units of 1/256 each). The */ operand allows a workaround for the compiler's integer-only math.

Suppose we are required to multiply a value by 1.5. The whole number, and therefore the upper byte of the multiplier, would be 1, and the lower byte (fractional part) would be 128, since 128/256 = 0.5. It may be clearer to express the */ multiplier in HEX as $0180, since hex keeps the contents of the upper and lower bytes separate. Here's an example: -

```
DIM Value1 as WORD
Value1 = 100
Value1 = Value1 */ $0180          ' Multiply by 1.5 [1 + (128/256)]
PRINT DEC Value1                  ' Display result (150).
```

To calculate constants for use with the */ instruction, put the whole number portion in the upper byte, then use the following formula for the value of the lower byte: -

INT(fraction * 256)

For example, take Pi (3.14159). The upper byte would be $03 (the whole number), and the lower would be INT(0.14159 * 256) = 36 ($24). So the constant Pi for use with */ would be $0324. This isn't a perfect match for Pi, but the error is only about 0.1%.

Notes.
This operand enables compatibility with BASIC STAMP code, and melab's compiler code, but is rather obsolete considering the 32-bit capabilities of the PROTON+ compiler.

DIVIDE '/'.

Syntax
Assignment Variable = Variable **/** *Variable*

Overview
Divides variables and/or constants, returning an 8, 16, 32-bit or floating point result.

Operators
Assignment Variable can be any valid variable type.
Variable can be a constant, variable or expression.

The Divide operator (/) works exactly as you would expect with signed or unsigned integers from -2147483648 to +2147483647 as well as floating point.

```
DIM Value1 as WORD
DIM Value2 as WORD
Value1 = 1000
Value2 = 5
Value1 = Value1 / Value2          ' Divide the numbers.
PRINT DEC Value1                  ' Display the result (200).
```

```
' 32-bit division
DIM Value1 as WORD
DIM Value2 as DWORD
Value1 = 100
Value2 = 10000
Value2 = Value2 / Value1          ' Divide the numbers.
PRINT DEC Value1                  ' Display the result
```

MODULUS '//'.

Syntax

Assignment Variable = Variable // Variable

Overview

Return the remainder left after dividing one value by another.

Operators

Assignment Variable can be any valid variable type.
Variable can be a constant, variable or expression.

Some division problems don't have a whole-number result; they return a whole number and a fraction. For example, 1000/6 = 166.667. Integer math doesn't allow the fractional portion of the result, so 1000/6 = 166. However, 166 is an approximate answer, because 166*6 = 996. The division operation left a remainder of 4. The // returns the remainder of a given division operation. Numbers that divide evenly, such as 1000/5, produce a remainder of 0: -

```
        DIM Value1 as WORD
        DIM Value2 as WORD
        Value1 = 1000
        Value2 = 6
        Value1 = Value1 // Value2       ' Get remainder of Value1 / Value2.
        PRINT DEC Value1                ' Display the result (4).

' 32-bit modulus
        DIM Value1 as WORD
        DIM Value2 as DWORD
        Value1 = 100
        Value2 = 99999
        Value2 = Value2 // Value1       ' mod the numbers.
        PRINT DEC Value1                        ' Display the result
```

The modulus operator does not operate with floating point values or variables.

BITWISE AND '&'.

The And operator (&) returns the bitwise AND of two values. Each bit of the values is subject to the following logic: -

0 AND 0 = 0
0 AND 1 = 0
1 AND 0 = 0
1 AND 1 = 1

The result returned by & will contain 1s in only those bit positions in which both input values contain 1s: -

```
DIM Value1 as BYTE
DIM Value2 as BYTE
DIM Result as BYTE
Value1 = %00001111
Value2 = %10101101
Result = Value1 & Value2
PRINT BIN Result                ' Display AND result (%00001101)
```

or

```
PRINT BIN ( %00001111 & %10101101 )        ' Display AND result (%00001101)
```

Bitwise operations are not permissible with floating point values or variables.

BITWISE OR '|'.

The OR operator (|) returns the bitwise OR of two values. Each bit of the values is subject to the following logic: -

0 OR 0 = 0
0 OR 1 = 1
1 OR 0 = 1
1 OR 1 = 1

The result returned by | will contain 1s in any bit positions in which one or the other (or both) input values contain 1s: -

```
DIM Value1 as BYTE
DIM Value2 as BYTE
DIM Result as BYTE
Value1 = %00001111
Value2 = %10101001
Result = Value1 | Value2
PRINT bin Result                           ' Display OR result (%10101111)
```

or

```
PRINT bin ( %00001111 | %10101001 )         ' Display OR result (%10101111)
```

Bitwise operations are not permissible with floating point values or variables.

BITWISE XOR '^'.

The Xor operator (^) returns the bitwise XOR of two values. Each bit of the values is subject to the following logic: -

0 XOR 0 = 0
0 XOR 1 = 1
1 XOR 0 = 1
1 XOR 1 = 0

The result returned by ^ will contain 1s in any bit positions in which one or the other (but not both) input values contain 1s: -

```
DIM Value1 as BYTE
DIM Value2 as BYTE
DIM Result as BYTE
Value1 = %00001111
Value2 = %10101001
Result = Value1 ^ Value2
PRINT bin Result                              ' Display XOR result (%10100110)
```

or

```
PRINT bin ( %00001111 ^ %10101001 )           ' Display XOR result (%10100110)
```

Bitwise operations are not permissible with floating point values or variables.

BITWISE SHIFT LEFT '<<'.

Shifts the bits of a value to the left a specified number of places. Bits shifted off the left end of a number are lost; bits shifted into the right end of the number are 0s. Shifting the bits of a value left *n* number of times also has the effect of multiplying that number by two to the *nth* power.

For example 100 << 3 (shift the bits of the decimal number 100 left three places) is equivalent to 100 * 23.

```
DIM Value1 as WORD
DIM Loop as BYTE
Value1 = %1111111111111111
FOR Loop = 1 TO 16                            ' Repeat with b0 = 1 to 16.
    PRINT bin Value1 << Loop                  ' Shift Value1 left Loop places.
NEXT
```

Bitwise operations are not permissible with floating point values or variables.

BITWISE SHIFT RIGHT '>>'.

Shifts the bits of a variable to the right a specified number of places. Bits shifted off the right end of a number are lost; bits shifted into the left end of the number are 0s. Shifting the bits of a value right *n* number of times also has the effect of dividing that number by two to the *nth* power.

For example 100 >> 3 (shift the bits of the decimal number 100 right three places) is equivalent to 100 / 23.

```
DIM Value1 as WORD
DIM Loop as BYTE
Value1 = %1111111111111111
FOR Loop = 1 TO 16                    ' Repeat with b0 = 1 to 16.
    PRINT bin Value1 >> Loop          ' Shift Value1 right Loop places.
NEXT
```

BITWISE COMPLEMENT '~'

The Complement operator (~) Complements (inverts) the bits of a number. Each bit that contains a 1 is changed to 0 and each bit containing 0 is changed to 1. This process is also known as a "bitwise NOT".

```
DIM Value1 as WORD
DIM Value2 as WORD
Value2 = %1111000011110000
Value1 = ~Value2                  ' Complement Value2.
PRINT BIN16 Value1                ' Display the result
```

Complementing can be carried out with all variable types except **FLOAT**s. Attempting to complement a floating point variable will produce a syntax error.

ABS

Syntax

Assignment Variable = **ABS** *Variable*

Overview

Return the absolute value of a constant, variable or expression.

Operators

Assignment Variable can be any valid variable type.
Variable can be a constant, variable or expression.

32-bit Example

```
DEVICE = 16F877
DIM DWD1 AS DWORD    ' Declare a DWORD variable
DIM DWD2 AS DWORD    ' Declare a DWORD variable
CLS
DWD1 = -1234567      ' Load DWD1 with value -1234567
DWD2 = ABS DWD1      ' Extract the absolute value from DWD1
PRINT DEC DWD2       ' Display the result, which is 1234567
STOP
```

Floating Point example

```
DEVICE = 16F877
DIM FLP1 AS FLOAT    ' Declare a FLOAT variable
DIM FLP2 AS FLOAT    ' Declare a FLOAT variable
CLS
FLP1 = -1234567      ' Load FLP1 with value -1234567.123
FLP2 = ABS FLP1      ' Extract the absolute value from FLP1
PRINT DEC FLP2       ' Display the result, which is 1234567.123
STOP
```

ACOS

Syntax

Assignment Variable = **ACOS** *Variable*

Overview

Deduce the Arc Cosine of a value

Operators

Assignment Variable can be any valid variable type.
Variable can be a constant, variable or expression that requires the ARC COSINE (Inverse Cosine) extracted. The value expected and returned by the floating point **ACOS** is in RADIANS. The value must be in the range of -1 to +1

Example

```
INCLUDE "PROTON18_4.INC"   ' Use the PROTON board for the demo
DEVICE = 18F452            ' Choose a 16-bit core device
DIM FLOATIN AS FLOAT       ' Holds the value to ACOS
DIM FLOATOUT AS FLOAT      ' Holds the result of the ACOS
DELAYMS 500                ' Wait for the PICmicro to stabilise
CLS                        ' Clear the LCD
FLOATIN = 0.8              ' Load the variable
FLOATOUT = ACOS FLOATIN    ' Extract the ACOS of the value
PRINT DEC FLOATOUT         ' Display the result
STOP
```

Notes

ACOS is not implemented with 12, or 14-bit core devices, however, with the extra functionality, and more linear memory offered by the 16-bit core devices, full 32-bit floating point ARC COSINE is implemented.

Floating point trigonometry is extremely memory hungry, so do not be surprised if a large chunk of the PICmicro^{tm} is used with a single operator. This also means that floating point trigonometry is comparatively slow to operate.

ASIN

Syntax

Assignment Variable = **ASIN** *Variable*

Overview

Deduce the Arc Sine of a value

Operators

Assignment Variable can be any valid variable type.
Variable can be a constant, variable or expression that requires the ARC SINE (Inverse Sine) extracted. The value expected and returned by **ASIN** is in RADIANS. The value must be in the range of -1 to +1

Example

```
INCLUDE "PROTON18_4.INC"    ' Use the PROTON board for the demo
DEVICE = 18F452             ' Choose a 16-bit core device
DIM FLOATIN AS FLOAT        ' Holds the value to ASIN
DIM FLOATOUT AS FLOAT       ' Holds the result of the ASIN
DELAYMS 500                 ' Wait for the PICmicro to stabilise
CLS                         ' Clear the LCD
FLOATIN = 0.8               ' Load the variable
FLOATOUT = ASIN FLOATIN     ' Extract the ASIN of the value
PRINT DEC FLOATOUT          ' Display the result
STOP
```

Notes

ASIN is not implemented with 12, or 14-bit core devices, however, with the extra functionality, and more linear memory offered by the 16-bit core devices, full 32-bit floating point ARC SINE is implemented.

Floating point trigonometry is extremely memory hungry, so do not be surprised if a large chunk of the PICmicro^{tm} is used with a single operator. This also means that floating point trigonometry is comparatively slow to operate.

ATAN

Syntax

Assignment Variable = **ATAN** *Variable*

Overview

Deduce the Arc Tangent of a value

Operators

Assignment Variable can be any valid variable type.
Variable can be a constant, variable or expression that requires the ARC TANGENT (Inverse Tangent) extracted. The value expected and returned by the floating point **ATAN** is in RADIANS.

Example

```
INCLUDE "PROTON18_4.INC"     ' Use the PROTON board for the demo
DEVICE = 18F452              ' Choose a 16-bit core device
DIM FLOATIN AS FLOAT         ' Holds the value to ATAN
DIM FLOATOUT AS FLOAT        ' Holds the result of the ATAN
DELAYMS 500                  ' Wait for the PICmicro to stabilise
CLS                          ' Clear the LCD
FLOATIN = 1                  ' Load the variable
FLOATOUT = ATAN FLOATIN      ' Extract the ATAN of the value
PRINT DEC FLOATOUT           ' Display the result
STOP
```

Notes

ATAN is not implemented with 12, or 14-bit core devices, however, with the extra functionality, and more linear memory offered by the 16-bit core devices, full 32-bit floating point ARC TANGENT is implemented.

Floating point trigonometry is extremely memory hungry, so do not be surprised if a large chunk of the PICmicro^{tm} is used with a single operator. This also means that floating point trigonometry is comparatively slow to operate.

COS

Syntax
Assignment Variable = **COS** *Variable*

Overview
Deduce the Cosine of a value

Operators
Assignment Variable can be any valid variable type.
Variable can be a constant, variable or expression that requires the COSINE extracted. The value expected and returned by **COS** is in RADIANS.

Example
```
INCLUDE "PROTON18_4.INC"    ' Use the PROTON board for the demo
DEVICE = 18F452             ' Choose a 16-bit core device
DIM FLOATIN AS FLOAT        ' Holds the value to COS with
DIM FLOATOUT AS FLOAT       ' Holds the result of the COS
DELAYMS 500                 ' Wait for the PICmicro to stabilise
CLS                         ' Clear the LCD
FLOATIN = 123               ' Load the variable
FLOATOUT = COS FLOATIN      ' Extract the COS of the value
PRINT DEC FLOATOUT          ' Display the result
STOP
```

Notes
With 12, and 14-bit core devices, **COS** returns the 8-bit cosine of a value, compatible with the BASIC Stamp syntax. The result is in two's complement form (i.e. -127 to 127). **COS** starts with a value in binary radians, 0 to 255, instead of the customary 0 to 359 degrees.

However, with the extra functionality, and more linear memory offered by the 16-bit core devices, full 32-bit floating point COSINE is implemented.

Floating point trigonometry is extremely memory hungry, so do not be surprised if a large chunk of the PICmicro^{tm} is used with a single operator. This also means that floating point trigonometry is comparatively slow to operate.

DCD

2 n -power decoder of a four-bit value. **DCD** accepts a value from 0 to 15, and returns a 16-bit number with that bit number set to 1. For example: -

```
WRD1= DCD 12              ' Set bit 12.
PRINT BIN16 WRD1          ' Display result (%0001000000000000)
```

DCD does not (as yet) support **DWORD**, or **FLOAT** type variables. Therefore the highest value obtainable is 65535.

DIG **(BASIC Stamp version)**

In this form, the **DIG** operator is compatible with the BASIC STAMP, and the melab's PicBASIC Pro compiler. **DIG** returns the specified decimal digit of a 16-bit positive value. Digits are numbered from 0 (the rightmost digit) to 4 (the leftmost digit of a 16- bit number; 0 to 65535). Example: -

```
WRD1= 9742
PRINT WRD1 DIG 2                    ' Display digit 2 (7)
FOR Loop = 0 TO 4
    PRINT WRD1 DIG Loop             ' Display digits 0 through 4 of 9742.
NEXT
```

Note

DIG does not support **FLOAT** type variables.

EXP

Syntax

Assignment Variable = **EXP** *Variable*

Overview

Deduce the exponential function of a value. This is *e* to the power of value where *e* is the base of natural logarithms. **EXP** 1 is 2.7182818.

Operators

Assignment Variable can be any valid variable type.
Variable can be a constant, variable or expression.

Example

```
INCLUDE "PROTON18_4.INC"    ' Use the PROTON board for the demo
DEVICE = 18F452             ' Choose a 16-bit core device
DIM FLOATIN AS FLOAT        ' Holds the value to EXP with
DIM FLOATOUT AS FLOAT       ' Holds the result of the EXP
DELAYMS 500                 ' Wait for the PICmicro to stabilise
CLS                         ' Clear the LCD
FLOATIN = 1                 ' Load the variable
FLOATOUT = EXP FLOATIN      ' Extract the EXP of the value
PRINT DEC FLOATOUT          ' Display the result
STOP
```

Notes

EXP is not implemented with 12, or 14-bit core devices, however, with the extra functionality, and more linear memory offered by the 16-bit core devices, full 32-bit floating point exponentials are implemented.

Floating point trigonometry is extremely memory hungry, so do not be surprised if a large chunk of the PICmicro^{tm} is used with a single operator. This also means that floating point trigonometry is comparatively slow to operate.

LOG

Syntax
Assignment Variable = **LOG** *Variable*

Overview
Deduce the Natural Logarithm a value

Operators
Assignment Variable can be any valid variable type.
Variable can be a constant, variable or expression that requires the NATURAL LOGARITHM extracted.

Example
```
INCLUDE "PROTON18_4.INC"    ' Use the PROTON board for the demo
DEVICE = 18F452             ' Choose a 16-bit core device
DIM FLOATIN AS FLOAT        ' Holds the value to LOG with
DIM FLOATOUT AS FLOAT       ' Holds the result of the LOG
DELAYMS 500                 ' Wait for the PICmicro to stabilise
CLS                         ' Clear the LCD
FLOATIN = 1                 ' Load the variable
FLOATOUT = LOG FLOATIN      ' Extract the LOG of the value
PRINT DEC FLOATOUT          ' Display the result
STOP
```

Notes
LOG is not implemented with 12, or 14-bit core devices, however, with the extra functionality, and more linear memory offered by the 16-bit core devices, full 32-bit floating point NATURAL LOGARITHMS are implemented.

Floating point trigonometry is extremely memory hungry, so do not be surprised if a large chunk of the PICmicro^{tm} is used with a single operator. This also means that floating point trigonometry is comparatively slow to operate.

LOG10

Syntax
Assignment Variable = **LOG10** *Variable*

Overview
Deduce the Logarithm a value

Operators
Assignment Variable can be any valid variable type.
Variable can be a constant, variable or expression that requires the LOGARITHM extracted.

Example
```
INCLUDE "PROTON18_4.INC"    ' Use the PROTON board for the demo
DEVICE = 18F452             ' Choose a 16-bit core device
DIM FLOATIN AS FLOAT        ' Holds the value to LOG10 with
DIM FLOATOUT AS FLOAT       ' Holds the result of the LOG10
DELAYMS 500                 ' Wait for the PICmicro to stabilise
CLS                         ' Clear the LCD
FLOATIN = 1                 ' Load the variable
FLOATOUT = LOG10 FLOATIN    ' Extract the LOG10 of the value
PRINT DEC FLOATOUT          ' Display the result
STOP
```

Notes
LOG10 is not implemented with 12, or 14-bit core devices, however, with the extra functionality, and more linear memory offered by the 16-bit core devices, full 32-bit floating point LOGARITHMS are implemented.

Floating point trigonometry is extremely memory hungry, so do not be surprised if a large chunk of the PICmicro^{tm} is used with a single operator. This also means that floating point trigonometry is comparatively slow to operate.

MAX

Returns the maximum of two numbers. Its use is to limit numbers to a specific value. Its syntax is: -

```
' Set VAR2 to the larger of VAR1 and 100 (VAR2 will lie between values ' 100 and 255)
VAR2 = VAR1 MAX 100
```

MAX does not (as yet) support **DWORD**, or **FLOAT** type variables. Therefore the highest value obtainable is 65535.

MIN

Returns the minimum of two numbers. Its use is to limit numbers to a specific value. Its syntax is: -

```
' Set VAR2 to the smaller of VAR1 and 100 (VAR2 cannot be greater ' than 100)
VAR2 = VAR1 MIN 100
```

MIN does not (as yet) support **DWORD**, or **FLOAT** type variables. Therefore the highest value obtainable is 65535.

NCD

Priority encoder of a 16-bit value. NCD takes a 16-bit value, finds the highest bit containing a 1 and returns the bit position plus one (1 through 16). If no bit is set, the input value is 0. NCD returns 0. NCD is a fast way to get an answer to the question "what is the largest power of two that this value is greater than or equal to?" The answer that NCD returns will be that power, plus one. Example: -

```
WRD1= %1101              ' Highest bit set is bit 3.
PRINT DEC NCD WRD1       ' Display the NCD of WRD1(4).
```

NCD does not (as yet) support **DWORD**, or **FLOAT** type variables.

POW

Syntax

Assignment Variable = **POW** *Variable* , *Pow Variable*

Overview

Computes *Variable* to the power of *Pow Variable*.

Operators

Assignment Variable can be any valid variable type.
Variable can be a constant, variable or expression.
Pow Variable can be a constant, variable or expression.

Example

```
INCLUDE "PROTON18_4.INC"    ' Use the PROTON board for the demo
DEVICE = 18F452             ' Choose a 16-bit core device
DIM POW_OF as FLOAT
DIM FLOATIN as FLOAT        ' Holds the value to POW with
DIM FLOATOUT as FLOAT       ' Holds the result of the POW
DELAYMS 500                 ' Wait for the PICmicro to stabilise
CLS                         ' Clear the LCD
POW_OF = 10
FLOATIN = 2                 ' Load the variable
FLOATOUT = POW FLOATIN,POW_OF         ' Extract the POW of the value
PRINT DEC FLOATOUT          ' Display the result
STOP
```

Notes.

POW is not implemented with 12, or 14-bit core devices, however, with the extra functionality, and more linear memory offered by the 16-bit core devices, full 32-bit floating point power of is implemented.

Floating point trigonometry is extremely memory hungry, so do not be surprised if a large chunk of the PICmicro^{tm} is used with a single operator. This also means that floating point trigonometry is comparatively slow to operate.

REV

Reverses the order of the lowest bits in a value. The number of bits to be reversed is from 1 to 32. Its syntax is: -

```
VAR1 = %10101100 REV 4          ' Sets VAR1 to %10100011
```

or

```
DIM DWD AS DWORD
' Sets DWD to %10101010000000001111111110100011
DWD = %10101010000000001111111110101100 REV 4
```

SIN

Syntax
Assignment Variable = **SIN** *Variable*

Overview
Deduce the Sine of a value

Operators
Assignment Variable can be any valid variable type.
Variable can be a constant, variable or expression that requires the SINE extracted. The value expected and returned by **SIN** is in RADIANS.

Example
```
INCLUDE "PROTON18_4.INC"     ' Use the PROTON board for the demo
DEVICE = 18F452              ' Choose a 16-bit core device
DIM FLOATIN AS FLOAT         ' Holds the value to SIN
DIM FLOATOUT AS FLOAT        ' Holds the result of the SIN
DELAYMS 500                  ' Wait for the PICmicro to stabilise
CLS                          ' Clear the LCD
FLOATIN = 123                ' Load the variable
FLOATOUT = SIN FLOATIN       ' Extract the SIN of the value
PRINT DEC FLOATOUT           ' Display the result
STOP
```

Notes
With 12, and 14-bit core devices, **SIN** returns the 8-bit sine of a value, compatible with the BASIC Stamp syntax. The result is in two's complement form (i.e. -127 to 127). **SIN** starts with a value in binary radians, 0 to 255, instead of the customary 0 to 359 degrees.

However, with the extra functionality, and more linear memory offered by the 16-bit core devices, full 32-bit floating point SINE is implemented.

Floating point trigonometry is extremely memory hungry, so do not be surprised if a large chunk of the PICmicro^{tm} is used with a single operator. This also means that floating point trigonometry is comparatively slow to operate.

SQR

Syntax
Assignment Variable = **SQR** *Variable*

Overview
Deduce the Square Root of a value

Operators
Assignment Variable can be any valid variable type.
Variable can be a constant, variable or expression that requires the SQUARE ROOT extracted.

Notes
With 12, and 14-bit core devices, **SQR** returns an integer square root of a value, compatible with the BASIC Stamp syntax. Remember that most square roots have a fractional part that the compiler discards in doing its integer-only math. Therefore it computes the square root of 100 as 10 (correct), but the square root of 99 as 9 (the actual is close to 9.95). Example: -

```
VAR1 = SQR VAR2
```

or

```
PRINT SQR 100          ' Display square root of 100 (10).
PRINT SQR 99           ' Display of square root of 99 (9 due to truncation)
```

However, with the extra functionality, and more linear memory offered by the 16-bit core devices, full 32-bit floating point **SQR** is implemented.

Example

```
INCLUDE "PROTON18_4.INC"   ' Use the PROTON board for the demo
DIM FLOATIN AS FLOAT       ' Holds the value to SQR
DIM FLOATOUT AS FLOAT      ' Holds the result of the SQR
DELAYMS 500                ' Wait for the PICmicro to stabilise
CLS                        ' Clear the LCD
FLOATIN = 600              ' Load the variable
FLOATOUT = SQR FLOATIN     ' Extract the SQR of the value
PRINT DEC FLOATOUT         ' Display the result
STOP
```

Floating point trigonometry is extremely memory hungry, so do not be surprised if a large chunk of the PICmicro^{tm} is used with a single operator. This also means that floating point trigonometry is comparatively slow to operate.

TAN

Syntax
Assignment Variable = **TAN** *Variable*

Overview
Deduce the Tangent of a value

Operators
Assignment Variable can be any valid variable type.
Variable can be a constant, variable or expression that requires the TANGENT extracted. The value expected and returned by the floating point **TAN** is in RADIANS.

Example

```
INCLUDE "PROTON18_4.INC"    ' Use the PROTON board for the demo
DEVICE = 18F452             ' Choose a 16-bit core device
DIM FLOATIN AS FLOAT        ' Holds the value to TAN
DIM FLOATOUT AS FLOAT       ' Holds the result of the TAN
DELAYMS 500                 ' Wait for the PICmicro to stabilise
CLS                         ' Clear the LCD
FLOATIN = 1                 ' Load the variable
FLOATOUT = TAN FLOATIN      ' Extract the TAN of the value
PRINT DEC FLOATOUT          ' Display the result
STOP
```

Notes
TAN is not implemented with 12, or 14-bit core devices, however, with the extra functionality, and more linear memory offered by the 16-bit core devices, full 32-bit floating point TANGENT is implemented.

Floating point trigonometry is extremely memory hungry, so do not be surprised if a large chunk of the PICmicro^{tm} is used with a single operator. This also means that floating point trigonometry is comparatively slow to operate.

DIV32

In order to make the PROTON+ compiler more compatible with code produced for the melab's PicBASIC Pro compiler, the **DIV32** operator has been added. The melab's compiler's multiply operand operates as a 16-bit x 16-bit multiply, thus producing a 32-bit result. However, since the compiler only supports a maximum variable size of 16 bits (**WORD**), access to the result had to happen in 2 stages: -

Var = VAR1 * VAR2 returns the lower 16 bits of the multiply

while…

Var = VAR1 ** VAR2 returns the upper 16 bits of the multiply

There was no way to access the 32-bit result as a valid single value.

In many cases it is desirable to be able to divide the entire 32-bit result of the multiply by a 16-bit number for averaging, or scaling. **DIV32** is actually limited to dividing a 31-bit unsigned integer (0 - 2147483647) by a 15-bit unsigned integer (0 - 32767). This ought to be sufficient in most situations.

Because the melab's compiler only allows a maximum variable size of 16 bits (0 - 65535), **DIV32** relies on the fact that a multiply was performed just prior to the **DIV32** command, and that the internal compiler variables still contain the 32-bit result of the multiply. No other operation may occur between the multiply and the **DIV32** or the internal variables may be altered, thus destroying the 32-bit multiplication result.

The following example demonstrates the operation of **DIV32**: -

```
DIM WRD1 AS WORD
DIM WRD2 AS WORD
DIM WRD3 AS WORD
DIM Fake AS WORD              ' Must be a WORD type variable for result

WRD2 = 300
WRD3 = 1000

Fake = WRD2 * WRD3            ' Operators ** or */ could also be used instead
WRD1= DIV32 100
PRINT DEC WRD1
```

The above program assigns WRD2 the value 300 and WRD3 the value 1000. When multiplied together, the result is 300000. However, this number exceeds the 16-bit word size of a variable (65535). Therefore, the dummy variable, FAKE, contains only the lower 16 bits of the result. **DIV32** uses the compiler's internal (SYSTEM) variables as the operands.

Notes.

This operand enables a certain compatibility with melab's compiler code, but is rather obsolete considering the 32-bit, and floating point capabilities of the PROTON+ compiler.

Notes

Commands and Directives

ADIN	Read the on-board analogue to digital converter.
ASM-ENDASM	Insert assembly language code section.
BOX	Draw a square on a graphic LCD.
BRANCH	Computed **GOTO** (equiv. to ON..GOTO).
BRANCHL	**BRANCH** out of page (long **BRANCH**).
BREAK	Exit a loop prematurely.
BSTART	Send a **START** condition to the I^{2}C bus.
BSTOP	Send a **STOP** condition to the I^{2}C bus.
BRESTART	Send a **RESTART** condition to the I^{2}C bus.
BUSACK	Send an **ACKNOWLEDGE** condition to the I^{2}C bus.
BUSIN	Read bytes from an I^{2}C device.
BUSOUT	Write bytes to an I^{2}C device.
BUTTON	Detect and debounce a key press.
CALL	Call an assembly language subroutine.
CDATA	Define initial contents in memory.
CF_INIT	Initialise the interface to a Compact Flash card.
CF_SECTOR	Point to the sector of interest in a Compact Flash card.
CF_READ	Read data from a Compact Flash card.
CF_WRITE	Write data to a Compact Flash card.
CIRCLE	Draw a circle on a graphic LCD.
CLEAR	Place a variable or bit in a low state, or clear all RAM area.
CLEARBIT	Clear a bit of a port or variable, using a variable index.
CLS	Clear the LCD.
CONFIG	Set or Reset programming fuse configurations.
COUNTER	Count the number of pulses occurring on a pin.
CREAD	Read data from code memory.
CURSOR	Position the cursor on the LCD.
CWRITE	Write data to code memory.
DATA	Define initial contents in memory.
DEC	Decrement a variable.
DECLARE	Adjust library routine parameters.
DELAYMS	Delay (1mSec resolution).
DELAYUS	Delay (1uSec resolution).
DEVICE	Choose the type of PICmicro^{tm} to compile with.
DIG	Return the value of a decimal digit.
DIM	Create a variable.
DISABLE	DISABLE software interrupts previously ENABLED.
DTMFOUT	Produce a DTMF Touch Tone note.
EDATA	Define initial contents of on-board EEPROM.
ENABLE	ENABLE software interrupts previously DISABLED.
END	Stop execution of the BASIC program.
EREAD	Read a value from on-board EEPROM.
EWRITE	Write a value to on-board EEPROM.
FOR…TO…NEXT…STEP	Repeatedly execute statements.
FREQOUT	Generate one or two tones, of differing or the same frequencies.
GETBIT	Examine a bit of a port or variable, using a variable index.
GOSUB	Call a BASIC subroutine at a specified label.
GOTO	Continue execution at a specified label.
HBSTART	Send a **START** condition to the I^{2}C bus using the MSSP module.
HBSTOP	Send a **STOP** condition to the I^{2}C bus using the MSSP module.
HBRESTART	Send a **RESTART** condition to the I^{2}C bus using the MSSP module.
HBUSACK	Send an **ACK** condition to the I^{2}C bus using the MSSP module.
HBUSIN	Read from an I^{2}C device using the MSSP module.

HBUSOUT	Write to an I^{2}C device using the MSSP module.
HIGH	Make a pin or port high.
HPWM	Generate a PWM signal using the CCP module.
HRSIN	Receive data from the serial port on devices that contain a USART.
HRSOUT	Transmit data from the serial port on devices that contain a USART.
HSERIN	Receive data from the serial port on devices that contain a USART.
HSEROUT	Transmit data from the serial port on devices that contain a USART.
HRSIN2	Same as **HRSIN** but using a 2nd USART if available.
HRSOUT2	Same as **HRSOUT** but using a 2nd USART if available.
HSERIN2	Same as **HSERIN** but using a 2nd USART if available.
HSEROUT2	Same as **HSEROUT** but using a 2nd USART if available.
IF..THEN..ELSEIF..ELSE..ENDIF	Conditionally execute statements.
INC	Increment a variable.
INCLUDE	Load a BASIC file into the source code.
INKEY	Scan a keypad.
INPUT	Make pin an input.
[LET]	Assign the result of an expression to a variable. (Optional command).
LCDREAD	Read a single byte from a Graphic LCD.
LCDWRITE	Write bytes to a Graphic LCD.
LEFT$	Extract *n* amount of characters from the left of a String. For 18F devices only.
LDATA	Place information into code memory. For access by **LREAD**.
LINE	Draw a line in any direction on a graphic LCD.
LINETO	Draw a straight line in any direction on a graphic LCD, starting from the previous LINE command's end position.
LOADBIT	Set or Clear a bit of a port or variable, using a variable index.
LOOKDOWN	Search a constant lookdown table for a value.
LOOKDOWNL	Search constant or variable lookdown table for a value.
LOOKUP	Fetch a constant value from a lookup table.
LOOKUPL	Fetch a constant or variable value from lookup table.
LOW	Make a pin or port low.
LREAD	Read a value from an **LDATA** table and place into Variable.
LREAD8, LREAD16, LREAD32	Read a single or multi-byte value from an **LDATA** table with more efficiency than **LREAD**.
MID$	Extract *n* amount of characters from a String beginning at *n* characters from the left. For 18F devices only.
ON INTERRUPT	Execute a subroutine using a SOFTWARE interrupt.
ON_INTERRUPT	Execute an ASSEMBLER subroutine on a HARWARE interrupt.
ON_LOW_INTERRUPT	Execute an ASSEMBLER subroutine when a LOW PRIORITY HARDWARE interrupt occurs on a 16-bit core device.
ON GOSUB	Call a Subroutine based on an Index value. For 18F devices only.
ON GOTO	Jump to an address in code memory based on an Index value. (Primarily for smaller PICmicros)
ON GOTOL	Jump to an address in code memory based on an Index value. (Primarily for larger PICmicros)
OUTPUT	Make a pin an output.
OREAD	Receive data from a device using the Dallas 1-wire protocol.
OWRITE	Send data to a device using the Dallas 1-wire protocol.
ORG	Set Program Origin.
PEEK	Read a byte from a register or variable. Rarely used, now obsolete.
PIXEL	Read a single pixel from a Graphic LCD.
PLOT	Set a single pixel on a Graphic LCD.
POKE	Write a byte to register or variable. Rarely used, now obsolete, command.

POT	Read a potentiometer on specified pin.
PRINT	Display characters on an LCD.
PULSIN	Measure the pulse width on a pin.
PULSOUT	Generate a pulse to a pin.
PWM	Output a pulse width modulated pulse train to pin.
RANDOM	Generate a pseudo-random number.
RCIN	Measure a pulse width on a pin.
READ	Read a value from memory.
REM	Add a remark to the source code.
REPEAT...UNTIL	Execute a block of instructions until a condition is true.
RESTORE	Adjust the position of data to **READ**.
RESUME	Re-enable software interrupts and return.
RETURN	Continue at the statement following the last **GOSUB**.
RIGHT$	Extract *n* amount of characters from the right of a String. For 18F devices only.
RSIN	Asynchronous serial input from a fixed pin and baud rate.
RSOUT	Asynchronous serial output to a fixed pin and baud rate.
SEED	Seed the random number generator, to obtain a more random result.
SELECT..CASE..ENDSELECT	Conditionally run blocks of code.
SERIN	Receive asynchronous serial data (i.e. RS232 data).
SEROUT	Transmit asynchronous serial data (i.e. RS232 data).
SERVO	Control a servo motor.
SET	Place a variable or bit in a high state.
SET_OSCCAL	Calibrate the internal oscillator found on some PICmicro^{tm} devices.
SETBIT	Set a bit of a port or variable, using a variable index.
SHIN	Synchronous serial input.
SHOUT	Synchronous serial output.
SLEEP	Power down the processor for a period of time.
SNOOZE	Power down the processor for short period of time.
SOUND	Generate a tone or white-noise on a specified pin.
SOUND2	Generate 2 tones from 2 separate pins.
STOP	Stop program execution.
STR	Load a Byte array with values.
STRN	Create a NULL terminated Byte array.
STR$	Convert the contents of a variable to a NULL terminated String.
SWAP	Exchange the values of two variables.
SYMBOL	Create an alias to a constant, port, pin, or register.
TOGGLE	Reverse the state of a port's bit.
TOLOWER	Convert the characters in a String to lower case. For 18F devices only.
TOUPPER	Convert the characters in a String to UPPER case. For 18F devices only.
UNPLOT	Clear a single pixel on a Graphic LCD.
USBINIT	Initialise the USB interrupt on devices that contain a USB module.
USBIN	Receive data via a USB endpoint on devices that contain a USB module.
USBOUT	Transmit data via a USB endpoint on devices that contain a USB module.
VAL	Convert a NULL terminated String to an integer value.
VARPTR	Locate the address of a variable.
WHILE…WEND	Execute statements while condition is true.
XIN	Receive data using the X10 protocol.
XOUT	Transmit data using the X10 protocol.

ADIN

Syntax
Variable **= ADIN** *channel number*

Overview
Read the value from the on-board Analogue to Digital Converter.

Operators
Variable is a user defined variable.
Channel number can be a constant or a variable expression.

Example

```
'Read the value from channel 0 of the ADC and place in variable VAR1.

ADIN_RES = 10                 ' 10-bit result required
ADIN_TAD = FRC                ' RC OSC chosen
ADIN_STIME = 50               ' Allow 50us sample time
DIM VAR1 AS WORD
TRISA = %00000001             ' Configure AN0 (PORTA.0) as an input
ADCON1 = %10000000            ' Set analogue input on PORTA.0
VAR1 = ADIN 0                 ' Place the conversion into variable VAR1
```

ADIN Declares
There are three **DECLARE** directives for use with **ADIN.** These are: -

DECLARE ADIN_RES 8 , 10 , or 12.
Sets the number of bits in the result.

If this **DECLARE** is not used, then the default is the resolution of the PICmicro^{tm} type used. For example, the 16F87X range will result in a resolution of 10-bits, along with the 16-bit core devices, while the standard PICmicro^{tm} types will produce an 8-bit result. Using the above **DECLARE** allows an 8-bit result to be obtained from the 10-bit PICmicro^{tm} types, but NOT 10-bits from the 8-bit types.

DECLARE ADIN_TAD 2_FOSC , 8_FOSC , 32_FOSC , 64_FOSC , or FRC.
Sets the ADC's clock source.

All compatible PICs have four options for the clock source used by the ADC. 2_FOSC, 8_FOSC, 32_FOSC, and 64_FOSC are ratios of the external oscillator, while FRC is the PICmicro's internal RC oscillator. Instead of using the predefined names for the clock source, values from 0 to 3 may be used. These reflect the settings of bits 0-1 in register ADCON0.

Care must be used when issuing this **DECLARE**, as the wrong type of clock source may result in poor resolution, or no conversion at all. If in doubt use FRC which will produce a slight reduction in resolution and conversion speed, but is guaranteed to work first time, every time. FRC is the default setting if the **DECLARE** is not issued in the BASIC listing.

DECLARE ADIN_STIME 0 to 65535 microseconds (us).
Allows the internal capacitors to fully charge before a sample is taken. This may be a value from 0 to 65535 microseconds (us).

A value too small may result in a reduction of resolution. While too large a value will result in poor conversion speeds without any extra resolution being attained.

A typical value for **ADIN_STIME** is 50 to 100. This allows adequate charge time without loosing too much conversion speed. But experimentation will produce the right value for your particular requirement. The default value if the **DECLARE** is not used in the BASIC listing is 50.

Notes

Before the **ADIN** command may be used, the appropriate **TRIS** register must be manipulated to set the desired pin to an input. Also, the ADCON1 register must be set according to which pin is required as an analogue input, and in some cases, to configure the format of the conversion's result. See the numerous Microchip datasheets for more information on these registers and how to set them up correctly for the specific device used.

If multiple conversions are being implemented, then a small delay should be used after the **ADIN** command. This allows the ADC's internal capacitors to discharge fully: -

```
Again:
        VAR1 = ADIN 3     ' Place the conversion into variable VAR1
        DELAYUS 1         ' Wait for 1us
        GOTO Again        ' Read the ADC forever
```

The circuit below shows a typical setup for a simple ADC test.

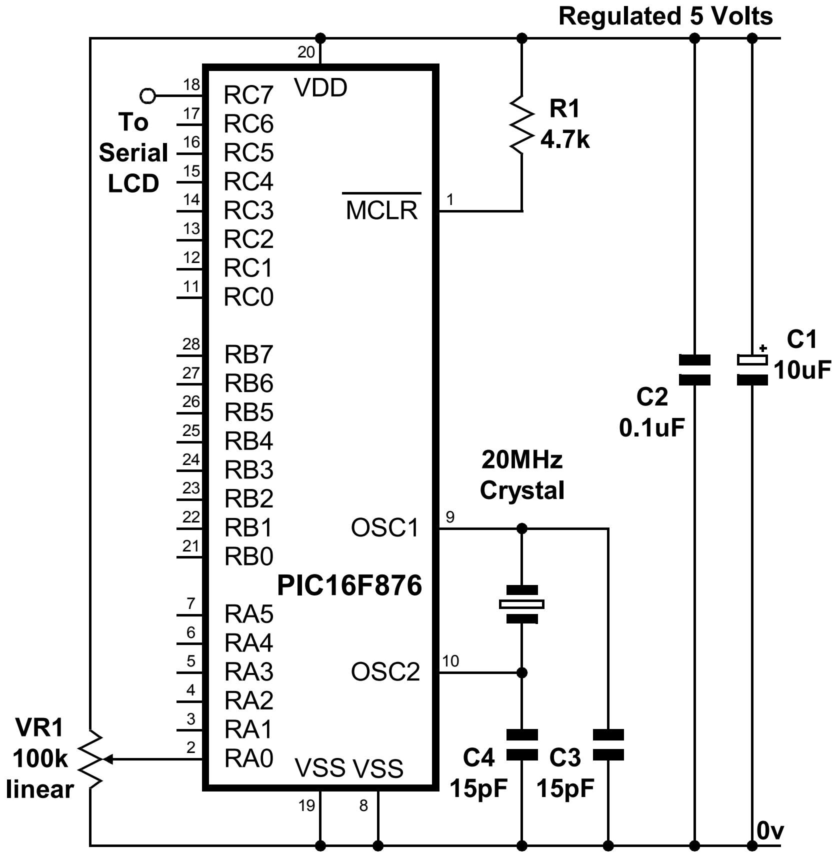
Regulated 5 Volts
20
VDD
18
RC7
17
RC6
16
RC5
15
RC4
14
RC3
13
RC2
12
RC1
11
RC0
To Serial LCD
R1
4.7k
1
MCLR
28
RB7
27
RB6
26
RB5
25
RB4
24
RB3
23
RB2
22
RB1
21
RB0
C1
10uF
+
C2
0.1uF
20MHz Crystal
9
OSC1
PIC16F876
7
RA5
6
RA4
5
RA3
10
OSC2
4
RA2
3
RA1
2
RA0
VR1
100k
linear
VSS VSS
19
8
C4
15pF
C3
15pF
0v

See also : **RCIN, POT.**

ASM..ENDASM

Syntax

ASM
assembler mnemonics
ENDASM

or

@ *assembler mnemonic*

Overview

Incorporate in-line assembler in the BASIC code. The mnemonics are passed directly to the assembler without the compiler interfering in any way. This allows a great deal of flexibility that cannot always be achieved using BASIC commands alone.

BOX

Syntax

BOX *Set_Clear* **,** *Xpos Start* **,** *Ypos Start* **,** *Size*

Overview

Draw a square on a graphic LCD.

Operators

Set_Clear may be a constant or variable that determines if the square will set or clear the pixels. A value of 1 will set the pixels and draw a square, while a value of 0 will clear any pixels and erase a square .

Xpos Start may be a constant or variable that holds the X position for the centre of the square. Can be a value from 0 to 127.

Ypos Start may be a constant or variable that holds the Y position for the centre of the square. Can be a value from 0 to 63.

Size may be a constant or variable that holds the Size of the square (in pixels). Can be a value from 0 to 255.

Example

' Draw a square at position 63,32 with a size of 20 pixels

```
INCLUDE "PROTON_G4.INT"

DIM XPOS as BYTE
DIM YPOS as BYTE
DIM SIZE as BYTE
DIM SET_CLR as BYTE

DELAYMS 200                        ' Wait for PICmicro to stabilise
CLS                                ' Clear the LCD
XPOS = 63
YPOS = 32
SIZE = 20
SET_CLR = 1
BOX SET_CLR , XPOS , YPOS , RADIUS
STOP
```

Notes

Because of the aspect ratio of the pixels on the graphic LCD (approx 1.5 times higher than wide) the square will appear elongated.

See Also : CIRCLE, LINE, LINETO.

BRANCH

Syntax
BRANCH *Index*, **[***Label1* {,...*Labeln* }**]**

Overview
Cause the program to jump to different locations based on a variable index. On a PICmicro^{tm} device with only one page of memory.

Operators
Index is a constant, variable, or expression, that specifies the address to branch to.
Label1,...***Labeln*** are valid labels that specify where to branch to. A maximum of 255 labels may be placed between the square brackets, 256 if using a 16-bit core device.

Example

```
            DEVICE 16F84
            DIM INDEX AS BYTE
Start:      INDEX = 2                         ' Assign INDEX a value of 2
            ' Jump to label 2 (Lab_2) because INDEX = 2
            BRANCH INDEX,[Lab_0, Lab_1, Lab_2]
Lab_0:      INDEX = 2                         ' INDEX now equals 2
            GOTO Start
Lab_1:      INDEX = 0                         ' INDEX now equals 0
            GOTO Start
Lab_2:      INDEX = 1                         ' INDEX now equals 1
            GOTO Start
```

The above example we first assign the index variable a value of 2, then we define our labels. Since the first position is considered 0 and the variable index equals 2 the **BRANCH** command will cause the program to jump to the third label in the brackets [Lab_2].

Notes
BRANCH operates the same as ON x GOTO. It's useful when you want to organise a structure such as: -

```
    IF VAR1 = 0 THEN GOTO Lab_0          ' VAR1 =0: go to label "Lab_0"
    IF VAR1 = 1 THEN GOTO Lab_1          ' VAR1 =1: go to label "Lab_1"
    IF VAR1 = 2 THEN GOTO Lab_2          ' VAR1 =2: go to label "Lab_2"
```

You can use **BRANCH** to organise this into a single statement: -

```
    BRANCH VAR1, [Lab_0 , Lab_1, Lab_2]
```

This works exactly the same as the above **IF**...**THEN** example. If the value is not in range (in this case if VAR1 is greater than 2), **BRANCH** does nothing. The program continues with the next instruction..

The **BRANCH** command is primarily for use with PICmicro^{tm} devices that have one page of memory (0-2047). If larger PICmicro's are used and you suspect that the branch label will be over a page boundary, use the **BRANCHL** command instead.

See also : **BRANCHL**

BRANCHL

Syntax
BRANCHL *Index*, **[***Label1* {,...*Labeln* }**]**

Overview
Cause the program to jump to different locations based on a variable index. On a PICmicro^{tm} device with more than one page of memory.

Operators
Index is a constant, variable, or expression, that specifies the address to branch to.
Label1,...***Labeln*** are valid labels that specify where to branch to. A maximum of 127 labels may be placed between the square brackets, 256 if using a 16-bit core device.

Example

```
        DEVICE 16F877
        DIM INDEX AS BYTE
Start:  INDEX = 2                    ' Assign INDEX a value of 2
        ' Jump to label 2 (Lab_2) because INDEX = 2
        BRANCHL INDEX,[Lab_0, Lab_1, Lab_2]
Lab_0:  INDEX = 2                    ' INDEX now equals 2
        GOTO Start
Lab_1:  INDEX = 0                    ' INDEX now equals 0
        GOTO Start
Lab_2:  INDEX = 1                    ' INDEX now equals 1
        GOTO Start
```

The above example we first assign the index variable a value of 2, then we define our labels. Since the first position is considered 0 and the variable index equals 2 the **BRANCHL** command will cause the program to jump to the third label in the brackets [Lab_2].

Notes
The **BRANCHL** command is mainly for use with PICmicro^{tm} devices that have more than one page of memory (greater than 2048). It may also be used on any PICmicro^{tm} device, but does produce code that is larger than **BRANCH**.

See also : **BRANCH**

BREAK

Syntax
BREAK

Overview
Exit a FOR...NEXT, WHILE...WEND or REPEAT...UNTIL loop prematurely.

Example 1
' Break out of a FOR NEXT loop when the count reaches 10

```
INCLUDE "PROTON_4.INC"        ' Demo using PROTON Dev board
DIM VAR1 as BYTE

DELAYMS 200                   ' Wait for PICmicro to stabilise
CLS                           ' Clear the LCD
FOR VAR1 = 0 TO 39            ' Create a loop of 40 revolutions
PRINT AT 1,1,DEC VAR1         ' Print the revolutions on the first line of the LCD
IF VAR1 = 10 THEN BREAK       ' Break out of the loop when VAR1 = 10
DELAYMS 200                   ' Delay so we can see what's happening
NEXT                          ' Close the FOR-NEXT loop
PRINT AT 2,1,"EXITED AT " , DEC VAR1 ' Display the value when the loop was broken
STOP
```

Example 2
' Break out of a REPEAT-UNTIL loop when the count reaches 10

```
INCLUDE "PROTON_4.INC"        ' Demo using PROTON Dev board
DIM VAR1 as BYTE

DELAYMS 200                   ' Wait for PICmicro to stabilise
CLS                           ' Clear the LCD
VAR1 = 0
REPEAT                        ' Create a loop
PRINT AT 1,1,DEC VAR1         ' Print the revolutions on the first line of the LCD
IF VAR1 = 10 THEN BREAK       ' Break out of the loop when VAR1 = 10
DELAYMS 200                   ' Delay so we can see what's happening
INC VAR1
UNTIL VAR1 > 39               ' Close the loop after 40 revolutions
PRINT AT 2,1,"EXITED AT " , DEC VAR1 ' Display the value when the loop was broken
STOP
```

Example 3
' Break out of a WHILE-WEND loop when the count reaches 10

```
INCLUDE "PROTON_4.INC"                ' Demo using PROTON Dev board
DIM VAR1 as BYTE
DELAYMS 200                           ' Wait for PICmicro to stabilise
CLS                                   ' Clear the LCD
VAR1 = 0
WHILE VAR1 < 40                       ' Create a loop of 40 revolutions
PRINT AT 1,1,DEC VAR1                 ' Print the revolutions on the first line of the LCD
IF VAR1 = 10 THEN BREAK               ' Break out of the loop when VAR1 = 10
DELAYMS 200                           ' Delay so we can see what's happening
INC VAR1
WEND                                  ' Close the loop
PRINT AT 2,1,"EXITED AT " , DEC VAR1 ' Display the value when the loop was broken
STOP
```

Notes
The **BREAK** command is similar to a GOTO but operates internally. When the **BREAK** command is encountered, the compiler will force a jump to the loop's internal exit label.

If the **BREAK** command is used outside of a FOR-NEXT REPEAT-UNTIL or WHILE-WEND loop, an error will be produced.

See also : FOR...NEXT, WHILE...WEND, REPEAT...UNTIL.

BSTART

Syntax
BSTART

Overview
Send a **START** condition to the I^{2}C bus.

Notes
Because of the subtleties involved in interfacing to some I^{2}C devices, the compiler's standard **BUSIN**, and **BUSOUT** commands were found lacking somewhat. Therefore, individual pieces of the I^{2}C protocol may be used in association with the new structure of **BUSIN**, and **BUSOUT**. See relevant sections for more information.

Example

```
 ' Interface to a 24LC32 serial eeprom
DEVICE = 16F877
DIM Loop AS BYTE
DIM Array[10] AS BYTE
' Transmit bytes to the I2C bus
BSTART                        ' Send a START condition
BUSOUT %10100000              ' Target an eeprom, and send a WRITE command
BUSOUT 0                      ' Send the HIGHBYTE of the address
BUSOUT 0                      ' Send the LOWBYTE of the address
FOR LOOP = 48 TO 57           ' Create a loop containing ASCII 0 to 9
BUSOUT LOOP                   ' Send the value of LOOP to the eeprom
NEXT                          ' Close the loop
BSTOP                         ' Send a STOP condition
DELAYMS 10                    ' Wait for the data to be entered into eeprom matrix
' Receive bytes from the I2C bus
BSTART                        ' Send a START condition
BUSOUT %10100000              ' Target an eeprom, and send a WRITE command
BUSOUT 0                      ' Send the HIGHBYTE of the address
BUSOUT 0                      ' Send the LOWBYTE of the address
BRESTART                      ' Send a RESTART condition
BUSOUT %10100001              ' Target an eeprom, and send a READ command
FOR Loop = 0 TO 9             ' Create a loop
Array[Loop] = BUSIN           ' Load an array with bytes received
IF Loop = 9 THEN BSTOP : ELSE BUSACK    ' ACK or STOP ?
NEXT                          ' Close the loop
PRINT AT 1,1, STR Array       ' Display the Array as a STRING
STOP
```

See also: **BSTOP, BRESTART, BUSACK, BUSIN, BUSOUT, HBSTART, HBRESTART, HBUSACK, HBUSIN, HBUSOUT.**

BSTOP

Syntax
BSTOP

Overview
Send a **STOP** condition to the I^{2}C bus.

BRESTART

Syntax
BRESTART

Overview
Send a **RESTART** condition to the I^{2}C bus.

BUSACK

Syntax
BUSACK

Overview
Send an **ACKNOWLEDGE** condition to the I^{2}C bus.

See also: **BSTOP, BSTART, BRESTART, BUSIN, BUSOUT, HBSTART, HBRESTART, HBUSACK, HBUSIN, HBUSOUT.**

BUSIN

Syntax

Variable = **BUSIN** *Control* , { *Address* }

or

Variable = **BUSIN**

or

BUSIN *Control* , { *Address* }, **[** *Variable* {, *Variable*…} **]**

or

BUSIN *Variable*

Overview

Receives a value from the I^{2}C bus, and places it into *variable/s*. If structures TWO or FOUR (see above) are used, then NO ACKNOWLEDGE, or STOP is sent after the data. Structures ONE and THREE first send the *control* and optional *address* out of the clock pin (*SCL*), and data pin (*SDA*).

Operators

Variable is a user defined variable or constant.
Control may be a constant value or a **BYTE** sized variable expression.
Address may be a constant value or a variable expression.

The four variations of the **BUSIN** command may be used in the same BASIC program. The SECOND and FOURTH types are useful for simply receiving a single byte from the bus, and must be used in conjunction with one of the low level commands. i.e. BSTART, BRESTART, BUSACK, or BSTOP. The FIRST, and THIRD types may be used to receive several values and designate each to a separate variable, or variable type.

The **BUSIN** command operates as an I^{2}C master, using the PICmicro's MSSP module, and may be used to interface with any device that complies with the 2-wire I^{2}C protocol.

The most significant 7-bits of *control* byte contain the control code and the slave address of the device being interfaced with. Bit-0 is the flag that indicates whether a read or write command is being implemented.

For example, if we were interfacing to an external eeprom such as the 24C32, the control code would be %10100001 or $A1. The most significant 4-bits (1010) are the eeprom's unique slave address. Bits 2 to 3 reflect the three address pins of the eeprom. And bit-0 is set to signify that we wish to read from the eeprom. Note that this bit is automatically set by the **BUSIN** command, regardless of its initial setting.

Example

```
' Receive a byte from the I2C bus and place it into variable VAR1.

DIM VAR1 AS BYTE                ' We'll only read 8-bits
DIM ADDRESS AS WORD                     ' 16-bit address required
SYMBOL Control %10100001        ' Target an eeprom
```

```
ADDRESS = 20                        ' Read the value at address 20
VAR1 = BUSIN Control , ADDRESS      ' Read the byte from the eeprom
```

or

```
BUSIN Control , ADDRESS, [ VAR1 ]   ' Read the byte from the eeprom
```

Address, is an optional parameter that may be an 8-bit or 16-bit value. If a variable is used in this position, the size of *address* is dictated by the size of the variable used (**BYTE** or **WORD**). In the case of the previous eeprom interfacing, the 24C32 eeprom requires a 16-bit address. While the smaller types require an 8-bit address. Make sure you assign the right size address for the device interfaced with, or you may not achieve the results you intended.

The value received from the bus depends on the size of the variables used, except for variation three, which only receives a **BYTE** (8-bits). For example: -

```
    DIM WRD AS WORD                 ' Declare a WORD size variable
    WRD = BUSIN Control , Address
```

Will receive a 16-bit value from the bus. While: -

```
    DIM VAR1 AS BYTE                ' Declare a BYTE size variable
    VAR1 = BUSIN Control , Address
```

Will receive an 8-bit value from the bus.

Using the THIRD variation of the **BUSIN** command allows differing variable assignments. For example: -

```
    DIM VAR1 AS BYTE
    DIM WRD AS WORD
    BUSIN Control , Address , [ VAR1 , WRD ]
```

Will receive two values from the bus, the first being an 8-bit value dictated by the size of variable VAR1 which has been declared as a byte. And a 16-bit value, this time dictated by the size of the variable WRD which has been declared as a word. Of course, **BIT** type variables may also be used, but in most cases these are not of any practical use as they still take up a byte within the eeprom.

The SECOND and FOURTH variations allow all the subtleties of the I^{2}C protocol to be exploited, as each operation may be broken down into its constituent parts. It is advisable to refer to the datasheet of the device being interfaced to fully understand its requirements. See section on **BSTART**, **BRESTART**, **BUSACK**, or **BSTOP**, for example code.

Declares
See **BUSOUT** for declare explanations.

Notes
When the BUSOUT command is used, the appropriate SDA and SCL Port and Pin are automatically setup as inputs, and outputs.

Because the I^{2}C protocol calls for an *open-collector* interface, pull-up resistors are required on both the SDA and SCL lines. Values of 4.7KΩ to 10KΩwill suffice.

You may imagine that it's limiting having a fixed set of pins for the I^{2}C interface, but you must remember that several different devices may be attached to a single bus, each having a unique slave address. Which means there is usually no need to use up more than two pins on the PICmicro^{tm}, in order to interface to many devices.

STR modifier with BUSIN

Using the **STR** modifier allows variations THREE and FOUR of the **BUSIN** command to transfer the bytes received from the I^{2}C bus directly into a byte array. If the amount of received characters is not enough to fill the entire array, then a formatter may be placed after the array's name, which will only receive characters until the specified length is reached. An example of each is shown below: -

```
DIM Array[10] AS BYTE                          ' Define an array of 10 bytes
DIM Address AS BYTE                            ' Create a word sized variable
BUSIN %10100000 , Address , [ STR Array]       ' Load data into all the array
' Load data into only the first 5 elements of the array
BUSIN %10100000 , Address , [ STR Array\5]
BSTART                                         ' Send a START condition
BUSOUT %10100000              ' Target an eeprom, and send a WRITE command
BUSOUT 0                      ' Send the HIGHBYTE of the address
BUSOUT 0                      ' Send the LOWBYTE of the address
BRESTART                      ' Send a RESTART condition
BUSOUT %10100001              ' Target an eeprom, and send a READ command
BUSIN STR Array               ' Load all the array with bytes received
BSTOP                         ' Send a STOP condition
```

An alternative ending to the above example is: -

```
BUSIN STR Array\5             ' Load data into only the first 5 elements of the array
BSTOP                         ' Send a STOP condition
```

See also : BUSACK, BSTART, BRESTART, BSTOP, BUSOUT, HBSTART, HBRESTART, HBUSACK, HBUSIN, HBUSOUT.

BUSOUT

Syntax
BUSOUT *Control* , { *Address* } , **[** *Variable* {, *Variable*…} **]**

or

BUSOUT *Variable*

Overview
Transmit a value to the I^{2}C bus, by first sending the *control* and optional *address* out of the clock pin (*SCL*), and data pin (*SDA*). Or alternatively, if only one operator is included after the **BUSOUT** command, a single value will be transmitted, along with an ACK reception.

Operators
Variable is a user defined variable or constant.
Control may be a constant value or a **BYTE** sized variable expression.
Address may be a constant, variable, or expression.

The **BUSOUT** command operates as an I^{2}C master and may be used to interface with any device that complies with the 2-wire I^{2}C protocol.

The most significant 7-bits of *control* byte contain the control code and the slave address of the device being interfaced with. Bit-0 is the flag that indicates whether a read or write command is being implemented.

For example, if we were interfacing to an external eeprom such as the 24C32, the control code would be %10100000 or $A0. The most significant 4-bits (1010) are the eeprom's unique slave address. Bits 2 to 3 reflect the three address pins of the eeprom. And Bit-0 is clear to signify that we wish to write to the eeprom. Note that this bit is automatically cleared by the **BUSOUT** command, regardless of its initial value.

Example

```
' Send a byte to the I2C bus.

DIM VAR1 AS BYTE                  ' We'll only read 8-bits
DIM Address AS WORD               ' 16-bit address required
SYMBOL Control = %10100000        ' Target an eeprom
Address = 20                      ' Write to address 20
VAR1 = 200                        ' The value place into address 20
BUSOUT Control , Address , [ VAR1 ]   ' Send the byte to the eeprom
DELAYMS 10                        ' Allow time for allocation of byte
```

Address, is an optional parameter that may be an 8-bit or 16-bit value. If a variable is used in this position, the size of *address* is dictated by the size of the variable used (**BYTE** or **WORD**). In the case of the above eeprom interfacing, the 24C32 eeprom requires a 16-bit address. While the smaller types require an 8-bit address. Make sure you assign the right size address for the device interfaced with, or you may not achieve the results you intended.

The value sent to the bus depends on the size of the variables used. For example: -

```
DIM WRD AS WORD                        ' Declare a WORD size variable
BUSOUT Control , Address , [ WRD ]
```

Will send a 16-bit value to the bus. While: -

```
DIM VAR1 AS BYTE                       ' Declare a BYTE size variable
BUSOUT Control , Address , [ VAR1 ]
```

Will send an 8-bit value to the bus.

Using more than one variable within the brackets allows differing variable sizes to be sent. For example: -

```
DIM VAR1 AS BYTE
DIM WRD AS WORD
BUSOUT Control , Address , [ VAR1 , WRD ]
```

Will send two values to the bus, the first being an 8-bit value dictated by the size of variable VAR1 which has been declared as a byte. And a 16-bit value, this time dictated by the size of the variable WRD which has been declared as a word. Of course, **BIT** type variables may also be used, but in most cases these are not of any practical use as they still take up a byte within the eeprom.

A string of characters can also be transmitted, by enclosing them in quotes: -

```
BUSOUT Control , Address , [ "Hello World" , VAR1 , WRD ]
```

Using the second variation of the **BUSOUT** command, necessitates using the low level commands i.e. BSTART, BRESTART, BUSACK, or BSTOP.

Using the **BUSOUT** command with only one value after it, sends a byte of data to the I^{2}C bus, and returns holding the ACKNOWLEDGE reception. This acknowledge indicates whether the data has been received by the slave device.

The ACK reception is returned in the PICmicro's CARRY flag, which is STATUS.0, and also SYSTEM variable PP4.0. A value of zero indicates that the data was received correctly, while a one indicates that the data was not received, or that the slave device has sent a NACK return. You must read and understand the datasheet for the device being interfacing to, before the ACK return can be used successfully. An code snippet is shown below: -

```
' Transmit a byte to a 24LC32 serial eeprom
DIM PP4 AS BYTE SYSTEM        ‘ Bring the system variable into the BASIC program
BSTART                        ' Send a START condition
BUSOUT %10100000              ' Target an eeprom, and send a WRITE command
BUSOUT 0                      ' Send the HIGHBYTE of the address
BUSOUT 0                      ' Send the LOWBYTE of the address
BUSOUT "A"                    ' Send the value 65 to the bus
IF PP4.0 = 1 THEN GOTO Not_Received        ' Has ACK been received OK ?
BSTOP                         ' Send a STOP condition
DELAYMS 10                    ' Wait for the data to be entered into eeprom matrix
```

STR modifier with BUSOUT.
The **STR** modifier is used for transmitting a string of bytes from a byte array variable. A string is a set of bytes sized values that are arranged or accessed in a certain order. The values 1, 2, 3 would be stored in a string with the value 1 first, followed by 2 then followed by the value 3. A byte array is a similar concept to a string; it contains data that is arranged in a certain order. Each of the elements in an array is the same size. The string 1,2,3 would be stored in a byte array containing three bytes (elements).

Below is an example that sends four bytes from an array: -

```
DIM MYARRAY[10] AS BYTE                  ' Create a 10-byte array.
MYARRAY [0] = "A"                        ' Load the first 4 bytes of the array
MYARRAY [1] = "B"                        ' With the data to send
MYARRAY [2] = "C"
MYARRAY [3] = "D"
BUSOUT %10100000 , Address , [ STR MYARRAY \4 ] ' Send 4-byte string.
```

Note that we use the optional \n argument of **STR**. If we didn't specify this, the program would try to keep sending characters until all 10 bytes of the array were transmitted. Since we do not wish all 10 bytes to be transmitted, we chose to tell it explicitly to only send the first 4 bytes.

The above example may also be written as: -

```
DIM MYARRAY [10] AS BYTE    ' Create a 10-byte array.
STR MYARRAY = "ABCD"        ' Load the first 4 bytes of the array
BSTART                      ' Send a START condition
BUSOUT %10100000            ' Target an eeprom, and send a WRITE command
BUSOUT 0                    ' Send the HIGHBYTE of the address
BUSOUT 0                    ' Send the LOWBYTE of the address
BUSOUT STR MYARRAY \4       ' Send 4-byte string.
BSTOP                       ' Send a STOP condition
```

The above example, has exactly the same function as the previous one. The only differences are that the string is now constructed using the **STR** as a command instead of a modifier, and the low-level HBUS commands have been used.

Declares
There are three **DECLARE** directives for use with **BUSOUT**.
These are: -

DECLARE SDA_PIN PORT **.** PIN
Declares the port and pin used for the data line (SDA). This may be any valid port on the PICmicro^{tm}. If this declare is not issued in the BASIC program, then the default Port and Pin is PORTA.0

DECLARE SCL_PIN PORT **.** PIN
Declares the port and pin used for the clock line (SCL). This may be any valid port on the PICmicro^{tm}. If this declare is not issued in the BASIC program, then the default Port and Pin is PORTA.1

These declares, as is the case with all the DECLARES, may only be issued once in any single program, as they setup the I^{2}C library code at design time.

DECLARE SLOW_BUS ON - **OFF** or 1 - 0
Slows the bus speed when using an oscillator higher than 4MHz.

The standard speed for the I^{2}C bus is 100KHz. Some devices use a higher bus speed of 400KHz. If you use an 8MHz or higher oscillator, the bus speed may exceed the devices specs, which will result in intermittent transactions, or in some cases, no transactions at all. Therefore, use this **DECLARE** if you are not sure of the device's spec. The datasheet for the device used will inform you of its bus speed.

Notes
When the **BUSOUT** command is used, the appropriate SDA and SCL Port and Pin are automatically setup as inputs, and outputs.

Because the I^{2}C protocol calls for an *open-collector* interface, pull-up resistors are required on both the SDA and SCL lines. Values of 4.7KΩ to 10KΩ will suffice.

You may imagine that it's limiting having a fixed set of pins for the I^{2}C interface, but you must remember that several different devices may be attached to a single bus, each having a unique slave address. Which means there is usually no need to use up more than two pins on the PICmicro^{tm}, in order to interface to many devices.

A typical use for the I^{2}C commands is for interfacing with serial eeproms. Shown below is the connections to the I^{2}C bus of a 24C32 serial eeprom.

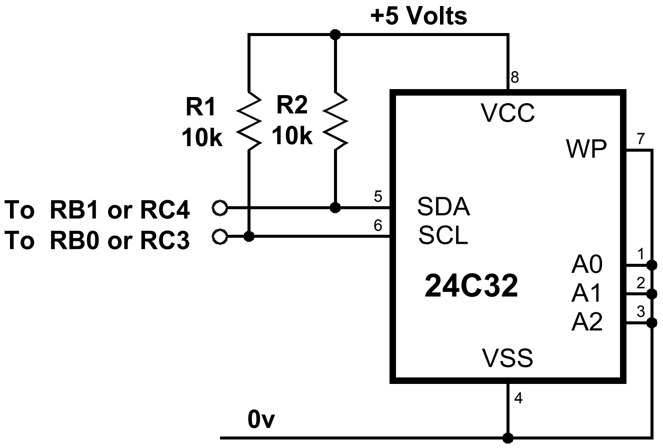

See also : **BUSACK, BSTART, BRESTART, BSTOP, BUSIN, HBSTART, HBRESTART, HBUSACK, HBUSIN, HBUSOUT.**

BUTTON

Syntax
BUTTON *Pin* , *DownState* , *Delay ,* Rate , *Workspace* , *TargetState , Label*

Overview
Debounce button input, perform auto-repeat, and branch to address if button is in target state.
Button circuits may be active-low or active-high.

Operators
Pin is a PORT.BIT, constant, or variable (0 - 15), that specifies the I/O pin to use. This pin will automatically be set to input.
DownState is a variable, constant, or expression (0 or 1) that specifies which logical state occurs when the button is pressed.
Delay is a variable, constant, or expression (0 - 255) that specifies how long the button must be pressed before auto-repeat starts. The delay is measured in cycles of the **BUTTON** routine. Delay has two special settings: 0 and 255. If Delay is 0, **BUTTON** performs no debounce or auto-repeat. If Delay is 255, **BUTTON** performs debounce, but no auto-repeat.
Rate is a variable, constant, or expression (0 – 255) that specifies the number of cycles between auto-repeats. The rate is expressed in cycles of the **BUTTON** routine.
Workspace is a byte variable used by **BUTTON** for workspace. It must be cleared to 0 before being used by **BUTTON** for the first time and should not be adjusted outside of the **BUTTON** command.
TargetState is a variable, constant, or expression (0 or 1) that specifies which state the button should be in for a branch to occur. (0 = not pressed, 1 = pressed).
Label is a label that specifies where to branch if the button is in the target state.

Example
```
        DIM BTNVAR AS BYTE                  ' Workspace for BUTTON instruction.
Loop:   ' Go to NoPress unless BTNVAR = 0.
        BUTTON 0 , 0 , 255 , 250 , BTNVAR, 0 , NoPress
        PRINT "* "
NoPress:
        GOTO Loop
```

Notes
When a button is pressed, the contacts make or break a connection. A short (1 to 20ms) burst of noise occurs as the contacts scrape and bounce against each other. **BUTTON**'s debounce feature prevents this noise from being interpreted as more than one switch action.

BUTTON also reacts to a button press the way a computer keyboard does to a key press. When a key is pressed, a character immediately appears on the screen. If the key is held down, there's a delay, then a rapid stream of characters appears on the screen. **BUTTON**'s auto-repeat function can be set up to work much the same way.

BUTTON is designed for use inside a program loop. Each time through the loop, **BUTTON** checks the state of the specified pin. When it first matches *DownState,* the switch is debounced. Then, as dictated by *TargetState,* it either branches to *address* (TargetState = 1) or doesn't (TargetState = 0).

If the switch stays in *DownState,* **BUTTON** counts the number of program loops that execute. When this count equals *Delay,* **BUTTON** once again triggers the action specified by *TargetState* and *address.* Thereafter, if the switch remains in *DownState*, **BUTTON** waits *Rate* number of cycles between actions. The *Workspace* variable is used by **BUTTON** to keep track of how many cycles have occurred since the *pin* switched to *TargetState* or since the last auto-repeat.

BUTTON does not stop program execution. In order for its delay and auto repeat functions to work properly, **BUTTON** must be executed from within a program loop.

Two suitable circuits for use with **BUTTON** are shown below.

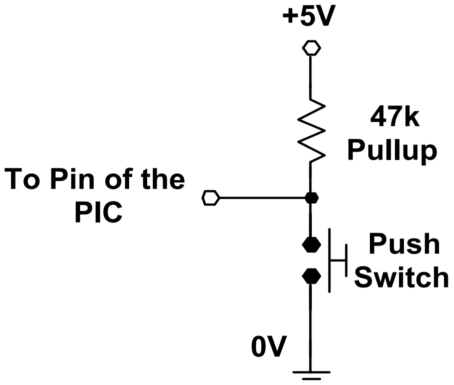
+5V
47k
Pullup
To Pin of the
PIC
Push
Switch
0V

Active LOW

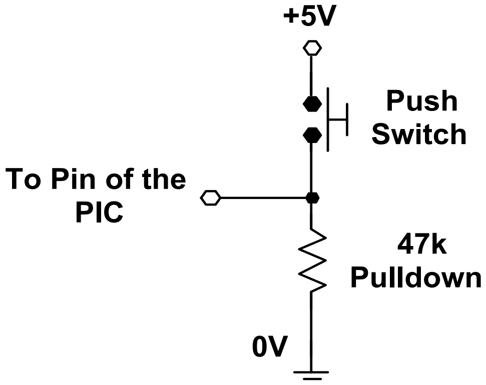
+5V
Push
Switch
To Pin of the
PIC
47k
Pulldown
0V

Active HIGH

CALL

Syntax
CALL *Label*

Overview
Execute the assembly language subroutine named *label*.

Operators
Label must be a valid label name.

Example

```
' Call an assembler routine
CALL Asm_Sub

ASM
Asm_Sub
{mnemonics}
Return
ENDASM
```

Notes
The **GOSUB** command is usually used to execute a BASIC subroutine. However, if your subroutine happens to be written in assembler, the **CALL** command should be used. The main difference between **GOSUB** and **CALL** is that when **CALL** is used, the *label's* existence is not checked until assembly time. Using **CALL**, a *label* in an assembly language section can be accessed that would otherwise be inaccessible to **GOSUB**. This also means that any errors produced will be assembler types.

The **CALL** command adds PAGE and BANK switching instructions prior to actually calling the subroutine, however, if **CALL** is used in an all assembler environment, the extra mnemonics preceding the command can interfere with carefully sculptured code such as bit tests etc. By wrapping the subroutine's name in parenthesis, the BANK and PAGE instructions are suppressed, and the **CALL** command becomes the **CALL** mnemonic.

```
CALL (SUBROUTINE_NAME)
```

Only use the mnemonic variation of **CALL**, if you know that your destination is within the same PAGE as the section of code calling it. This is not an issue if using 16-bit core devices, as they have a more linear memory organisation.

See also : **GOSUB, GOTO**

CDATA

Syntax
CDATA { *alphanumeric data* }

Overview
Place information directly into memory for access by **CREAD** and **CWRITE**.

Operators
alphanumeric data can be any value, alphabetic character, or string enclosed in quotes (") or numeric data without quotes.

Example

```
DEVICE 16F877              ' Use a 16F877 PICmicro
DIM VAR1 AS BYTE
VAR1 = CREAD 2000          ' Read the data from address 2000
ORG 2000                   ' Set the address of the CDATA command
CDATA 120                  ' Place 120 at address 2000
```

In the above example, the data is located at address 2000 within the PICmicro^{tm}, then it's read using the **CREAD** command.

Notes
CDATA is only available on the newer PICmicro^{tm} types that have self-modifying features, such as the 16F87x range and the 16-bit core devices, and offer an efficient use of precious code space.

The **CREAD** and **CWRITE** commands can also use a label address as a location variable. For example: -

```
        DEVICE 16F877                     ' A device with code modifying features
        DIM DByte AS BYTE
        DIM Loop AS BYTE
        FOR Loop = 0 TO 9                 ' Create a loop of 10
        DByte = CREAD Address + Loop      ' Read memory location ADDRESS + LOOP
        PRINT Dbyte                       ' Display the value read
        NEXT
        STOP
ADDRESS: CDATA "HELLO WORLD"              ' Create a string of text in FLASH memory
```

The program above reads and displays 10 values from the address located by the LABEL accompanying the **CDATA** command. Resulting in "HELLO WORL" being displayed.

Using the new in-line commands structure, the **CREAD** and **PRINT** parts of the above program may be written as: -

```
' Read and display memory location ADDRESS + LOOP
PRINT CREAD Address + Loop
```

The **CWRITE** command uses the same technique for writing to memory: -

```
        DEVICE 16F877                          ' A device with code modifying features
        DIM DByte AS BYTE
        DIM Loop AS BYTE
        ' Write a string to FLASH memory at location ADDRESS
        CWRITE Address , [ "HELLO WORLD" ]
        FOR Loop = 0 TO 9                      ' Create a loop of 10
        ' Read and display memory location ADDRESS + LOOP
        PRINT CREAD Address + Loop
        NEXT
        STOP
        ' Reserve 10 spaces in FLASH memory
ADDRESS: CDATA 32 , 32 , 32 , 32 , 32 , 32 , 32 , 32 , 32 , 32
```

Notice the string text now allowed in the CWRITE command. This allows the whole PICmicro^{tm} to be used for data storage and retrieval if desired.

Important Note
Take care not to overwrite existing code when using the **CWRITE** command, and also remember that the all PICmicro^{tm} devices have a finite amount of write cycles (approx 1000). A single program can easily exceed this limit, making that particular memory cell or cells inaccessible.

The configuration fuse setting WRTE must be enabled before **CDATA**, **CREAD** and **CWRITE** may be used. This enables the self-modifying feature. If the **CONFIG** directive is used, then the WRTE_ON fuse setting must be included in the list: -

```
        CONFIG WDT_ON , XT_OSC , WRTE_ON
```

Because the 14-bit core devices are only capable of holding 14 bits to a **WORD**, values greater than 16383 ($3FFF) cannot be stored.

16-bit device requirements.
Because the 16-bit core devices are **BYTE** oriented, as opposed to the 14-bit types which are **WORD** oriented. The CDATA tables should contain an even number of values, or corruption may occur on the last value read. For example: -

```
EVEN:       CDATA 1,2,3,"123"

ODD:        CDATA 1,2,3,"12"
```

Formatting a CDATA table with a 16-bit core device.
Sometimes it is necessary to create a data table with a known format for its values. For example all values will occupy 4 bytes of data space even though the value itself would only occupy 1 or 2 bytes. Formatters are not supported with 14-bit core devices, because they can only hold a maximum value of $3FFF (16383). i.e. 14-bits.

```
        CDATA 100000 , 10000 , 1000 , 100 , 10 , 1
```

The above line of code would produce an uneven code space usage, as each value requires a different amount of code space to hold the values. 100000 would require 4 bytes of code space, 10000 and 1000 would require 2 bytes, but 100, 10, and 1 would only require 1 byte.

Reading these values using **CREAD** would cause problems because there is no way of knowing the amount of bytes to read in order to increment to the next valid value.

The answer is to use formatters to ensure that a value occupies a predetermined amount of bytes. These are: -

BYTE
WORD
DWORD
FLOAT

Placing one of these formatters before the value in question will force a given length.

```
CDATA    DWORD 100000 , DWORD 10000 , DWORD 1000 ,_
         DWORD 100 , DWORD 10 , DWORD 1
```

BYTE will force the value to occupy one byte of code space, regardless of it's value. Any values above 255 will be truncated to the least significant byte.

WORD will force the value to occupy 2 bytes of code space, regardless of its value. Any values above 65535 will be truncated to the two least significant bytes. Any value below 255 will be padded to bring the memory count to 2 bytes.

DWORD will force the value to occupy 4 bytes of code space, regardless of its value. Any value below 65535 will be padded to bring the memory count to 4 bytes. The line of code shown above uses the **DWORD** formatter to ensure all the values in the **CDATA** table occupy 4 bytes of code space.

FLOAT will force a value to its floating point equivalent, which always takes up 4 bytes of code space.

If all the values in an **CDATA** table are required to occupy the same amount of bytes, then a single formatter will ensure that this happens.

```
    CDATA AS DWORD 100000 , 10000 , 1000 , 100 , 10 , 1
```

The above line has the same effect as the formatter previous example using separate **DWORD** formatters, in that all values will occupy 4 bytes, regardless of their value. All four formatters can be used with the **AS** keyword.

The example below illustrates the formatters in use.

```
' Convert a DWORD value into a string array
' Using only BASIC commands
' Similar principle to the STR$ command

    INCLUDE "PROTON18_4.INC"        ' Use a 16-bit core device
    DIM P10 AS DWORD                ' Power of 10 variable
    DIM CNT AS BYTE
    DIM J AS BYTE

    DIM VALUE AS DWORD              ' Value to convert
    DIM STRING1[11] AS BYTE         ' Holds the converted value
```

```
        DIM PTR AS BYTE                 ' Pointer within the Byte array

        DELAYMS 500                     ' Wait for PICmicro to stabilise
        CLS                             ' Clear the LCD
        CLEAR                           ' Clear all RAM before we start
        VALUE = 1234576                 ' Value to convert
        GOSUB DWORD_TO_STR              ' Convert VALUE to string
        PRINT STR STRING1               ' Display the result
        STOP
'-------------------------------------------------------------
' Convert a DWORD value into a string array
' Value to convert is placed in 'VALUE'
' Byte array 'STRING1' is built up with the ASCII equivalent

DWORD_TO_STR:
        PTR = 0
        J = 0
        REPEAT
        P10 = CREAD DWORD_TBL + (J * 4)
        CNT = 0

        WHILE VALUE >= P10
        VALUE = VALUE - P10
        INC CNT
        WEND

        IF CNT <> 0 THEN
        STRING1[PTR] = CNT + "0"
        INC PTR
        ENDIF
        INC J
        UNTIL J > 8

        STRING1[PTR] = VALUE + "0"
        INC PTR
        STRING1[PTR] = 0            ' Add the NULL to terminate the string
        RETURN

' CDATA table is formatted for all 32 bit values.
' Which means each value will require 4 bytes of code space
DWORD_TBL:
CDATA AS DWORD 1000000000, 100000000, 10000000, 1000000, 100000, 10000, 1000,_
               100, 10
```

Label names as pointers.

If a label's name is used in the list of values in a **CDATA** table, the labels address will be used. This is useful for accessing other tables of data using their address from a lookup table. See example below.

Note that this is not always permitted with 14-bit core devices, because they may not be able to hold the value in a 14-bit word.

```
' Display text from two CDATA tables
' Based on their address located in a separate table

        INCLUDE "PROTON18_4.INC"            ' Use a 16-bit core device

        DIM ADDRESS AS WORD
        DIM LOOP AS WORD
        DIM DATA_BYTE AS BYTE

        DELAYMS 200                         ' Wait for PICmicro to stabilise
        CLS                                 ' Clear the LCD
        ADDRESS = CREAD ADDR_TABLE          ' Locate the address of the first string
        WHILE 1 = 1                         ' Create an infinite loop
        DATA_BYTE = CREAD ADDRESS           ' Read each character from the CDATA string
        IF DATA_BYTE = 0 THEN EXIT_LOOP     ' Exit if NULL found
        PRINT DATA_BYTE                     ' Display the character
        INC ADDRESS                         ' Next character
        WEND                                        ' Close the loop
EXIT_LOOP:

        CURSOR 2,1                          ' Point to line 2 of the LCD
        ADDRESS = CREAD ADDR_TABLE + 2      ' Locate the address of the second string
        WHILE 1 = 1                         ' Create an infinite loop
        DATA_BYTE = CREAD ADDRESS           ' Read each character from the CDATA string
        IF DATA_BYTE = 0 THEN EXIT_LOOP2    ' Exit if NULL found
        PRINT DATA_BYTE                     ' Display the character
        INC ADDRESS                         ' Next character
        WEND                                ' Close the loop
EXIT_LOOP2:
        STOP

ADDR_TABLE:                                         ' Table of address's
                CDATA WORD STRING1,WORD STRING2
STRING1:
                CDATA "HELLO",0
STRING2:
                CDATA "WORLD",0
```

See also : **CONFIG, CREAD, CWRITE, DATA, LDATA, LREAD, READ.**

CF_INIT

Syntax

CF_INIT

Overview

Initialise the lines used for Compact Flash access by **CF_SECTOR**, **CF_READ** and **CF_WRITE**.

Notes

CF_INIT sets the pins used for the Compact Flash card to inputs and outputs accordingly. And must be issued before any Compact Flash commands are used in the program.

Essentially what the **CF_INIT** command does can be shown by the BASIC code listed below: -

```
Low CF_DTPORT                 ‘ Set Data lines to output low
Low CF_ADPORT                 ‘ Set Address lines to output low
Output CF_WEPIN               ‘ Set the CF WE pin to output
Low CF_CE1PIN                 ‘ Set the CF CE1 pin to output low
Output CF_OEPIN               ‘ Set the CF OE pin to output
Input CF_CD1PIN               ‘ Set the CF CD1 pin to input
Input CF_RDYPIN               ‘ Set the CF RDY_BSY pin to input
High CF_RSTPIN                ‘ Set the CF RESET pin to output high
Delayus 1                     ‘ Delay between toggles
Low CF_RSTPIN                 ‘ Set the CF RESET pin to output low
```

If the CF_RSTPIN **DECLARE** is not issued in the BASIC program, then the CF_RSTPIN’s port.bit is not set up and no reset will occur through software. However, you must remember to tie the Compact Flash RESET pin to ground.

The same applies to the CE1PIN. If the CF_CE1PIN **DECLARE** is not issued in the BASIC program, then this pin is not manipulated in any way, and you must remember to tie the Compact Flash CE1 pin to ground

See Also **CF_SECTOR (for a suitable circuit), CF_READ, CF_WRITE (for declares).**

CF_SECTOR

Syntax
CF_SECTOR *Sector Number* **,** *Operation* **,** *{Amount of Sectors}*

Overview
Setup the sector in the Compact Flash card that is to be written or read by the commands **CF_READ** and **CF_WRITE**.

Operators
Sector Number is the sector of interest in the Compact Flash card. This may be a constant value, variable, or expression. However, remember that there are potentially hundreds of thousands of sectors in a Compact Flash card so this variable will usually be a **WORD** or **DWORD** type.
Operation is the operation required by the Compact Flash card, this may either be the texts **WRITE** or **READ**. Or the values $30 or $20 which correspond to the texts accordingly.
Amount of Sectors is an optional parameter that informs the Compact Flash card as to how many sectors will be read or written in a single operation. This may be a constant value, variable, or expression. However, according to the Compact Flash data sheet, this may only be a value of 1 to 127, and is normally set to 1. The parameter is optional because it is usually only required once per **READ** or **WRITE** operation.

Example

```
‘ Write 20 sectors on a compact flash card then read them back and display serially
Device = 18F452                     ‘ We’ll use a 16-bit core device
XTAL = 4

HSERIAL_BAUD = 9600                 ' Set baud rate for USART serial coms
HSERIAL_RCSTA = %10010000           ' Enable serial port and continuous receive
HSERIAL_TXSTA = %00100100           ' Enable transmit and asynchronous mode
'-------------------------------------------------------------------------------
' CF Card Declarations
CF_DTPORT = PORTD                   ‘ Assign the CF data port to PORTD
CF_ADPORT = PORTE                   ‘ Assign the CF address port to PORTE
CF_WEPIN = PORTC.5                  ‘ Assign the CF WE pin to PORTC.5
CF_CE1PIN = PORTC.0                 ‘ Assign the CF CE1 pin to PORTC.0
CF_RDYPIN = PORTC.4                 ‘ Assign the CF RDY_BSY pin to PORTC.4
CF_OEPIN = PORTC.1                  ‘ Assign the CF OE pin to PORTC.1
CF_RSTPIN = PORTC.3                 ‘ Assign the CF RESET pin to PORTC.3
CF_CD1PIN = PORTA.5                 ‘ Assign the CF CD1 pin to PORTA.5
CF_ADPORT_MASK = False              ‘ No masking of address data required
CF_READ_WRITE_INLINE = False        ‘ Use subroutines for CF_READ/CFWRITE

Symbol CF_CD1 = PORTA.5             ‘ Alias the CD1 pin to PORTA.5
'-------------------------------------------------------------------------------
' Variable Declarations

Dim DATA_IO         as Byte         ‘ Bytes read/written to CF card
Dim BUFFER_SIZE     as Word         ‘ Internal counter of bytes in sector (i.e.512)
Dim SECTOR_NUMBER as Dword          ‘ Sector of interest
```

```
    '-----------------------------------------------------------------------------------------------------------
    ‘  Main Program Starts Here
    Delayms 100
    ALL_DIGITAL = True
    CF_INIT                                   ' Initialise the CF card's IO lines
    While CF_CD1 = 1 : Wend                   ' Is the Card inserted?
    '-----------------------------------------------------------------------------------------------------------
    ' WRITE 8-bit values from sector 0 to sector 20
WRITE_CF:
    DATA_IO = 0                                      ‘ Clear the data to write to the card
    SECTOR_NUMBER = 0                                ‘ Start at sector 0
    ' Set up the CF card for Writing 1 sector at a time in LBA mode
     CF_SECTOR SECTOR_NUMBER,WRITE,1
    Repeat                                           ‘ Form a loop for the sectors
    BUFFER_SIZE = 0
    Hserout ["WRITING SECTOR ",Dec SECTOR_NUMBER,13]
    Repeat                                           ‘ Form a loop for bytes in sector
    CF_WRITE [DATA_IO]                               ‘ Write a byte to the CF card
    Inc BUFFER_SIZE                                  ‘ Move up a byte
    Inc DATA_IO                                      ‘ Increment the data to write
    Until BUFFER_SIZE = 512                          ‘ Until all bytes are written
    Inc SECTOR_NUMBER                                ' Move up to the next sector
    ' And Set up the CF card for Writing in LBA mode
    CF_SECTOR SECTOR_NUMBER,WRITE
    Until SECTOR_NUMBER > 20                         ‘ Until all sectors are written
    '-----------------------------------------------------------------------------------------------------------
    ' READ 8-bit values from sector 0 to sector 20
    ' And display serially In columns and rows format
READ_CF:
    SECTOR_NUMBER = 0                                ‘ Start at sector 0
    ' Set up the CF card for reading 1 sector at a time in LBA mode
    CF_SECTOR SECTOR_NUMBER,READ,1
    Repeat                                           ‘ Form a loop for the sectors
    BUFFER_SIZE = 1
    Hserout ["SECTOR ",Dec SECTOR_NUMBER,13]
    Repeat                                           ‘ Form a loop for bytes in sector
    DATA_IO = CF_READ                                ‘ Read a byte from the CF card
    Hserout [HEX2 DATA_IO," "]                       ‘ Display it in Hexadecimal
    If BUFFER_SIZE // 32 = 0 Then Hserout [13]       ‘ Check if row finished
    Inc BUFFER_SIZE                                  ‘ Move up a byte
    Until BUFFER_SIZE > 512                          ‘ Until all bytes are read
    Hserout [Rep "-"\95,13]                          ' Draw a line under each sector
    Inc SECTOR_NUMBER                                ' Move up to the next sector
    ' And set up the CF card for reading in LBA mode
    CF_SECTOR SECTOR_NUMBER,READ
    Until SECTOR_NUMBER > 20                         ‘ Until all sectors are read
    Stop
```

Example 2

```
‘ Display a summary of the Compact Flash
Device = 18F452                     ‘ We’ll use a 16-bit core device
XTAL = 4
HSERIAL_BAUD = 9600                 ' Set baud rate for USART serial coms
HSERIAL_RCSTA = %10010000           ' Enable serial port and continuous receive
HSERIAL_TXSTA = %00100100           ' Enable transmit and asynchronous mode
' CF Card Declarations
CF_DTPORT = PORTD                   ‘ Assign the CF data port to PORTD
CF_ADPORT = PORTE                   ‘ Assign the CF address port to PORTE
CF_WEPIN = PORTC.5                  ‘ Assign the CF WE pin to PORTC.5
CF_CE1PIN = PORTC.0                 ‘ Assign the CF CE1 pin to PORTC.0
CF_RDYPIN = PORTC.4                 ‘ Assign the CF RDY_BSY pin to PORTC.4
CF_OEPIN = PORTC.1                  ‘ Assign the CF OE pin to PORTC.1
CF_RSTPIN = PORTC.3                 ‘ Assign the CF RESET pin to PORTC.3
CF_CD1PIN = PORTA.5                 ‘ Assign the CF CD1 pin to PORTA.5
CF_ADPORT_MASK = False              ‘ No masking of address data required
CF_READ_WRITE_INLINE = False        ‘ Use subroutines for CF_READ/CFWRITE
Symbol CF_CD1 = PORTA.5             ‘ Alias the CD1 pin to PORTA.5
' Variable Declarations
Dim DATA_IO as Word                 ‘ Words read from CF card
Dim SER_LOOP as Word                ‘ Internal counter of bytes
Dim SECTORS_PER_CARD as Dword            ‘ The amount of sectors in the CF card
Delayms 100
ALL_DIGITAL = True
CF_INIT                             ' Initialise the CF card's IO lines
While CF_CD1 = 1 : Wend             ' Is the Card inserted?
CF_Write 7,[$EC]                    ' Write CF execute identify drive command
CF_Write $20,[]                     ' Set address for READ SECTOR
DATA_IO = CF_Read                        ‘ Read from the CF card
Hserout ["General configuration = ",Hex4 DATA_IO,13]
DATA_IO = CF_Read                        ‘ Read from the CF card
Hserout ["Default number of cylinders = ",Dec DATA_IO,13]
DATA_IO = CF_Read                        ‘ Read from the CF card
Hserout ["Reserved = ",Dec DATA_IO,13]
DATA_IO = CF_Read                        ‘ Read from the CF card
Hserout ["Default number of heads = ",Dec DATA_IO,13]
DATA_IO = CF_Read                        ‘ Read from the CF card
Hserout ["Number of unformatted bytes per track = ",Dec DATA_IO,13]
DATA_IO = CF_Read                        ‘ Read from the CF card
Hserout ["Number of unformatted bytes per sector = ",Dec DATA_IO,13]
DATA_IO = CF_Read                        ‘ Read from the CF card
Hserout ["Default number of sectors per track = ",Dec DATA_IO,13]
DATA_IO = CF_Read                        ‘ Read from the CF card
SECTORS_PER_CARD.HighWord = DATA_IO
DATA_IO = CF_Read                        ‘ Read from the CF card
SECTORS_PER_CARD.LowWord = DATA_IO
Hserout ["Number of sectors per card = ",Dec SECTORS_PER_CARD,13]
DATA_IO = CF_Read                        ‘ Read from the CF card
Hserout ["Vendor Unique = ",Dec DATA_IO,13]
Hserout ["Serial number in ASCII (Right Justified) = "]
```

```
For SER_LOOP = 0 to 19
        DATA_IO.LowByte = CF_Read             ‘ Read from the CF card
        Hserout [DATA_IO.LowByte]
Next
Hserout [13]
DATA_IO = CF_Read                             ‘ Read from the CF card
Hserout ["Buffer type = ",Dec DATA_IO,13]
DATA_IO = CF_Read                             ‘ Read from the CF card
Hserout ["Buffer size in 512 byte increments = ",Dec DATA_IO,13]
DATA_IO = CF_Read                             ‘ Read from the CF card
Hserout ["# of ECC bytes passed on Read/Write Long Commands = ",_
             Dec DATA_IO,13]
Stop
```

The above example will display on the serial terminal, some details concerning the Compact Flash card being interfaced. This is ideal for testing if the circuit is working, but is also useful for ascertaining how many sectors the Compact Flash card contains.

Notes

Accessing a compact flash card is not the same as accessing standard memory. In so much as a complete sector must be written. i.e. all 512 bytes in a single operation. Reading from a compact flash card is more conventional in that once the sector is chosen using the **CF_SECTOR** command, any of the 512 bytes may be read from that sector.

The compiler’s Compact Flash access commands operate in what is called LBA (Logical Block Address) mode. Which means that it is accessed sector by sector instead of the more involved Cylinder/Head/Sector mode. LBA mode makes accessing Compact Flash easier and more intuitive. However, it is important to read and understand the CF+ and Compact Flash specifications document which can be obtained via the internet at **www.compactflash.org**.

A typical circuit for interfacing a Compact Flash card is shown below: -

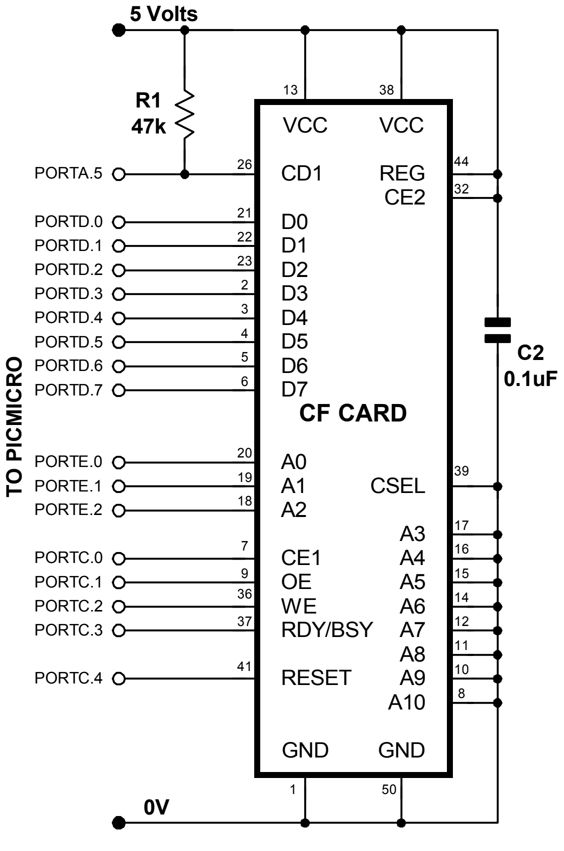
5 Volts
R1
47k
TO PICMICRO
PORTA.5
PORTD.0
PORTD.1
PORTD.2
PORTD.3
PORTD.4
PORTD.5
PORTD.6
PORTD.7
PORTE.0
PORTE.1
PORTE.2
PORTC.0
PORTC.1
PORTC.2
PORTC.3
PORTC.4
CF CARD
VCC
VCC
CD1
REG
CE2
D0
D1
D2
D3
D4
D5
D6
D7
A0
A1
A2
CSEL
A3
CE1
A4
OE
A5
WE
A6
RDY/BSY
A7
A8
RESET
A9
A10
GND
GND
C2
0.1uF
0V

The circuit shown overleaf can be used with the code examples listed earlier.

The RESET and CE1 lines are not essential to the operation of interfacing. The RESET line and the CE1 line must be connected to ground. However, the CE1 line is useful if multiplexing is used as the Compact Flash card will ignore all commands if the CE1 line is set high. And the RESET line is useful for a clean start up of the Compact Flash card.

The CF commands were written and tested only on the more modern "higher speed" compact flash cards. These operate at up to 40 times faster than conventional Compact Flash and also, more importantly, operate from a 3.3 Volt and 5 Volt power source. However, the low level routines used by the commands, when not in inline mode, are contained in a separate INC file located inside the compiler's **INC** folder. The file is named **CF_CMS.INC**, and can be altered if slower access is required. It is simply a matter of adding more **NOP** mnemonics inside the **CF@WR** and **CF@RD** subroutines.

See Also **CF_INIT, CF_READ, CF_WRITE (for declares).**

CF_READ

Syntax
Variable **= CF_READ**

Overview
Read data from a Compact Flash card.

Operators
Variable can be a **BIT**, **BYTE**, **WORD**, **DWORD** or **FLOAT** type variable that will be loaded with data read from the Compact Flash card.

Example

```
        ‘ Read 16-bit values from 20 sectors in a compact flash card and display serially
        Device = 16F877                        ‘ We’ll use a 14-bit core device
        XTAL = 4

        HSERIAL_BAUD = 9600                    ' Set baud rate for USART serial coms
        HSERIAL_RCSTA = %10010000              ' Enable serial port and continuous receive
        HSERIAL_TXSTA = %00100100              ' Enable transmit and asynchronous mode
        '-------------------------------------------------------------------------------------------------------
        ' CF Card Declarations
        CF_DTPORT = PORTD                      ‘ Assign the CF data port to PORTD
        CF_ADPORT = PORTE                      ‘ Assign the CF address port to PORTE
        CF_WEPIN = PORTC.5                     ‘ Assign the CF WE pin to PORTC.5
        CF_CE1PIN = PORTC.0                    ‘ Assign the CF CE1 pin to PORTC.0
        CF_RDYPIN = PORTC.4                    ‘ Assign the CF RDY_BSY pin to PORTC.4
        CF_OEPIN = PORTC.1                     ‘ Assign the CF OE pin to PORTC.1
        CF_RSTPIN = PORTC.3                    ‘ Assign the CF RESET pin to PORTC.3
        CF_CD1PIN = PORTA.5                    ‘ Assign the CF CD1 pin to PORTA.5
        CF_ADPORT_MASK = False                 ‘ No masking of address data required
        CF_READ_WRITE_INLINE = False           ‘ Use subroutines for CF_READ/CFWRITE

        Symbol CF_CD1 = PORTA.5                ‘ Alias the CD1 pin to PORTA.5
        '-------------------------------------------------------------------------------------------------------
        ' Variable Declarations

        Dim DATA_IO             as Word        ‘ Words read from CF card
        Dim BUFFER_SIZE         as Word        ‘ Internal counter of bytes in sector (i.e.512)
        Dim SECTOR_NUMBER as Dword             ‘ Sector of interest
        '-------------------------------------------------------------------------------------------------------
        ‘  Main Program Starts Here
        Delayms 100
        ALL_DIGITAL = True
        CF_INIT                                ' Initialise the CF card's IO lines
        While CF_CD1 = 1 : Wend                ' Is the Card inserted?
        '-------------------------------------------------------------------------------------------------------
        ' READ 8-bit values from sector 0 to sector 20
        ' And display serially In columns and rows format
READ_CF:
        SECTOR_NUMBER = 0                                ‘ Start at sector 0
        ' Set up the CF card for reading 1 sector at a time in LBA mode
        CF_SECTOR SECTOR_NUMBER,READ,1
```

```
Repeat                                       ‘ Form a loop for the sectors
BUFFER_SIZE = 1
Hserout ["SECTOR ",Dec SECTOR_NUMBER,13]
Repeat                                       ‘ Form a loop for words in sector
DATA_IO = CF_READ                            ‘ Read a Word from the CF card
Hserout [HEX4 DATA_IO," "]                   ‘ Display it in Hexadecimal
If BUFFER_SIZE // 32 = 0 Then Hserout [13]   ‘ Check if row finished
Inc BUFFER_SIZE                              ‘ Move up a word
Until BUFFER_SIZE > 256                      ‘ Until all words are read
Hserout [Rep "-"\95,13]                      ' Draw a line under each sector
Inc SECTOR_NUMBER                            ' Move up to the next sector
' And set up the CF card for reading in LBA mode
CF_SECTOR SECTOR_NUMBER,READ
Until SECTOR_NUMBER > 20                     ‘ Until all sectors are read
Stop
```

Notes

The amount of bytes read from the Compact Card depends on the variable type used as the assignment. i.e. the variable before the equals operator: -

A **BIT** type variable will read 1 byte from the Compact Flash card.
A **BYTE** type variable will also read 1 byte from the Compact Flash card.
A **WORD** type variable will read 2 bytes from the Compact Flash card Least Significant Byte First (LSB).
A **DWORD** type variable will read 4 bytes from the Compact Flash card Least Significant Byte First (LSB).
A **FLOAT** type variable will also read 4 bytes from the Compact Flash card in the correct format for a floating point variable.

Accessing Compact Flash memory is not the same as conventional memory. There is no mechanism for choosing the address of the data in question. You can only choose the sector then sequentially read the data from the card. In essence, the sector is the equivalent of the address in a conventional piece of memory, but instead of containing 1 byte of data, it contains 512 bytes.

Once the sector is chosen using the **CF_SECTOR** command, any amount of the 512 bytes available can be read from the card. Once a read has been accomplished, the Compact Flash card automatically increments to the next byte in the sector ready for another read. So that a simple loop as shown below will read all the bytes in a sector: -

```
BUFFER_SIZE = 0
Repeat                                       ‘ Form a loop for bytes in sector
DATA_IO = CF_READ                            ‘ Read a Byte from the CF card
Inc BUFFER_SIZE                              ‘ Increment the byte counter
Until BUFFER_SIZE = 512                      ‘ Until all Bytes are read
```

In order to extract a specific piece of data from a sector, a similar loop can be used, but with a condition attached that will drop out at the correct position: -

```
BUFFER_SIZE = 0
While 1 = 1                                 ‘ Form an infinite loop
DATA_IO = CF_READ                           ‘ Read a Byte from the CF card
If BUFFER_SIZE = 20 Then Break              ‘ Exit when correct position reached
Inc BUFFER_SIZE                             ‘ Increment the byte counter
Wend                                        ‘  Close the loop
```

The snippet above will exit the loop when the 20th byte has been read from the card.

Of course Arrays can also be loaded from a Compact Flash card in a similar way, but remember, the maximum size of an array in PROTON BASIC is 256 elements. The snippets below show two possible methods of loading an array with the data read from a Compact Flash card.

```
Dim AR1[256] as Byte                ‘ Create a 256 element array
Dim BUFFER_SIZE  as Word            ‘ Internal counter of bytes in sector
BUFFER_SIZE = 0
Repeat                              ‘ Form a loop for bytes in sector
AR1[BUFFER_SIZE] = CF_READ          ‘ Read a Byte from the CF card
Inc BUFFER_SIZE                     ‘ Increment the byte counter
Until BUFFER_SIZE = 256             ‘ Until all Bytes are read
```

Large arrays such as the one above are best suited to the 16-bit core devices. Not only because they generally have more RAM, but because their RAM is accessed more linearly and there are no BANK boundaries when using arrays. Also, by accessing some low level registers in a 16-bit core device it is possible to efficiently place all 512 bytes from a sector into 2 arrays:

```
Device = 18F452                     ‘ Choose a 16-bit core device
Dim AR1[256] as Byte                ‘ Create a 256 element array
Dim AR2[256] as Byte                ‘ Create another 256 element array
Dim BUFFER_SIZE  as Word            ‘ Internal counter of bytes in sector
Dim FSR0 as FSR0L.Word              ‘ Combine FSR0L/H as a 16-bit register
BUFFER_SIZE = 0
FSR0 = Varptr(AR1)                  ‘ Get the address of AR1 into FSR0L/H
Repeat                              ‘ Form a loop for bytes in sector
POSTINC0 = CF_READ                  ‘ Read a Byte from the CF card and place
                                    ‘ directly into memory, then increment to
                                    ‘ the next address in PIC RAM
Inc BUFFER_SIZE                     ‘ Increment the byte counter
Until BUFFER_SIZE = 512             ‘ Until all Bytes are read
```

When the above loop is finished, arrays AR1 and AR2 will hold the data read from the Compact Flash card’s sector. Of course you will need to pad out the snippets with the appropriate declares and the **CF_SECTOR** command.

See Also **CF_INIT, CF_SECTOR (for a suitable circuit), CF_WRITE (for declares).**

CF_WRITE

Syntax

CF_WRITE {*Address Data*} **, [** Variable {*Variable* {**,** *Variable etc*}**]**

Overview

Write data to a Compact Flash card.

Operators

Address Data is an optional value that is placed on the Compact Flash card's Address lines. This is not always required when writing to a card.
Variable can be a **BIT**, **BYTE**, **WORD**, **DWORD**, **FLOAT**, or **STRING** type variable that will be written to the Compact Flash card. More than one variable can be placed between the square braces if more than one write is required in a single operation.

The *variable* part of the **CF_WRITE** command is also optional, as some configurations only require the card's address lines to be loaded. In this case, use the syntax: -

CF_WRITE Address Data **, [ ]**
See example 2 in the CF_SECTOR section for an example of its use.

Example

```
' Write 20 sectors on a compact flash card
Device = 18F452                       ' We'll use a 16-bit core device
XTAL = 4

HSERIAL_BAUD = 9600                   ' Set baud rate for USART serial coms
HSERIAL_RCSTA = %10010000             ' Enable serial port and continuous receive
HSERIAL_TXSTA = %00100100             ' Enable transmit and asynchronous mode
'-------------------------------------------------------------------------------
' CF Card Declarations
CF_DTPORT = PORTD                     ' Assign the CF data port to PORTD
CF_ADPORT = PORTE                     ' Assign the CF address port to PORTE
CF_WEPIN = PORTC.5                    ' Assign the CF WE pin to PORTC.5
CF_CE1PIN = PORTC.0                   ' Assign the CF CE1 pin to PORTC.0
CF_RDYPIN = PORTC.4                   ' Assign the CF RDY_BSY pin to PORTC.4
CF_OEPIN = PORTC.1                    ' Assign the CF OE pin to PORTC.1
CF_RSTPIN = PORTC.3                   ' Assign the CF RESET pin to PORTC.3
CF_CD1PIN = PORTA.5                   ' Assign the CF CD1 pin to PORTA.5
CF_ADPORT_MASK = False                ' No masking of address data required
CF_READ_WRITE_INLINE = False          ' Use subroutines for CF_READ/CFWRITE

Symbol CF_CD1 = PORTA.5               ' Alias the CD1 pin to PORTA.5
'-------------------------------------------------------------------------------
' Variable Declarations

Dim DATA_IO           as Byte         ' Bytes written to CF card
Dim BUFFER_SIZE       as Word         ' Internal counter of bytes in sector (i.e.512)
Dim SECTOR_NUMBER as Dword            ' Sector of interest
'-------------------------------------------------------------------------------
'  Main Program Starts Here
Delayms 100
ALL_DIGITAL = True
```

```
        CF_INIT                                   ' Initialise the CF card's IO lines
        While CF_CD1 = 1 : Wend                   ' Is the Card inserted?
        '------------------------------------------------------------------------------------------------------------------------
        ' WRITE 8-bit values from sector 0 to sector 20
WRITE_CF:
        DATA_IO = 0                                   ‘ Clear the data to write to the card
        SECTOR_NUMBER = 0                             ‘ Start at sector 0
        ' Set up the CF card for Writing 1 sector at a time in LBA mode
        CF_SECTOR SECTOR_NUMBER,WRITE,1
        Repeat                                        ‘ Form a loop for the sectors
        BUFFER_SIZE = 0
        Hserout ["WRITING SECTOR ",Dec SECTOR_NUMBER,13]
        Repeat                                        ‘ Form a loop for bytes in sector
        CF_WRITE [DATA_IO]                            ‘ Write a byte to the CF card
        Inc BUFFER_SIZE                               ‘ Move up a byte
        Inc DATA_IO                                   ‘ Increment the data to write
        Until BUFFER_SIZE = 512                       ‘ Until all bytes are written
        Inc SECTOR_NUMBER                             ' Move up to the next sector
        ' And Set up the CF card for Writing in LBA mode
        CF_SECTOR SECTOR_NUMBER,WRITE
        Until SECTOR_NUMBER > 20                      ‘ Until all sectors are written
        Stop
```

Notes
The amount of bytes written to the Compact Card depends on the variable type used between the square braces: -

A **BIT** type variable will write 1 byte to the Compact Flash card.
A **BYTE** type variable will also write 1 byte to the Compact Flash card.
A **WORD** type variable will write 2 bytes to the Compact Flash card Least Significant Byte First (LSB).
A **DWORD** type variable will write 4 bytes to the Compact Flash card Least Significant Byte First (LSB).
A **FLOAT** type variable will also write 4 bytes to the Compact Flash card in the correct format of a floating point variable.

Accessing Compact Flash memory is not the same as conventional memory. There is no mechanism for choosing the address of the data in question. You can only choose the sector then sequentially write the data to the card. In essence, the sector is the equivalent of the address in a conventional piece of memory, but instead of containing 1 byte of data, it contains 512 bytes.

Once the sector is chosen using the **CF_SECTOR** command and a write operation is started, all 512 bytes contained in the sector must be written before they are transferred to the card’s flash memory.

Once a single write has been accomplished, the Compact Flash card automatically increments to the next byte in the sector ready for another write. So that a simple loop as shown below will write all the bytes in a sector: -

```
BUFFER_SIZE = 0
Repeat                                ' Form a loop for bytes in sector
CF_WRITE [DATA_IO]                    ' Write a Byte to the CF card
Inc BUFFER_SIZE                       ' Increment the byte counter
Until BUFFER_SIZE = 512               ' Until all Bytes are written
```

Compact Flash Interface Declares

There are several declares that need to be manipulated when interfacing to a Compact Flash card. There are the obvious port pins, but there are also some declares that optimise or speed up access to the card.

DECLARE CF_DTPORT PORT
This declare assigns the Compact Flash card's data lines. The data line consists of 8-bits so it is only suitable for ports that contain 8-bits such as PORTB, PORTC, PORTD etc.

DECLARE LCD_ADPORT PORT
This declare assigns the Compact Flash card's address lines. The address line consists of 3-bits, but A0 of the compact flash card must be attached to bit-0 of whatever port is used. For example, if the Compact Flash card's address lines were attached to PORTA of the PICmicro^{tm}, then A0 of the CF card must attach to PORTA.0, A1 or the CF card must attach to PORTA.1, and A2 of the CF card must attach to PORTA.2.

The CF access commands will mask the data before transferring it to the particular port that is being used so that the rest of it's pins are not effected. PORTE is perfect for the address lines as it contains only 3 pins on a 40-pin device, and the compiler can make full use of this by using the **CF_ADPORT_MASK** declare.

DECLARE CF_ADPORT_MASK = **ON** or **OFF**, or **TRUE** or **FALSE**, or 1, 0
Both the **CF_WRITE** and **CF_SECTOR** commands write to the Compact Flash card's address lines. However, these only contain 3-bits, so the commands need to ensure that the other bits of the PICmicro's PORT are not effected. This is accomplished by masking the unwanted data before transferring it to the address lines. This takes a little extra code space, and thus a little extra time to accomplish. However, there are occasions when the condition of the other bits on the PORT are not important, or when a PORT is used that only has 3-bits to it. i.e. PORTE with a 40-pin device. Issuing the **CF_ADPORT_MASK** declare and setting it FALSE, will remove the masking mnemonics, thus reducing code used and time taken.

DECLARE CF_RDYPIN PORT **.** PIN
Assigns the Compact Flash card's RDY/BSY line.

DECLARE CF_OEPIN PORT **.** PIN
Assigns the Compact Flash card's OE line.

DECLARE CF_WEPIN PORT **.** PIN
Assigns the Compact Flash card's WE line.

DECLARE CF_CD1PIN PORT **.** PIN
Assigns the Compact Flash card's CD1 line. The CD1 line is not actually used by any of the commands, but is set to input if the declare is issued in the BASIC program. The CD1 line is used to indicate whether the card is inserted into its socket.

DECLARE CF_RSTPIN PORT **.** PIN
Assigns the Compact Flash card's RESET line. The RESET line is not essential for interfacing to a Compact Flash card, but is useful if a clean power up is required. If the declare is not issued in the BASIC program, all reference to it is removed from the **CF_INIT** command. If the RESET line is not used for the card, ensure that it is tied to ground.

DECLARE CF_CE1PIN PORT **.** PIN
Assigns the Compact Flash card's CE1 line. As with the RESET line, the CE1 line is not essential for interfacing to a Compact Flash card, but is useful when multiplexing pins, as the card will ignore all commands when the CE1 line is set high. If the declare is not issued in the BASIC program, all reference to it is removed from the **CF_INIT** command. If the CE1 line is not used for the card, ensure that it is tied to ground.

DECLARE CF_READ_WRITE_INLINE = **ON** or **OFF**, or **TRUE** or **FALSE**, or 1, 0
Sometimes, speed is of the essence when accessing a Compact Flash card, especially when interfacing to the new breed of card which is 40 times faster than the normal type. Because of this, the compiler has the ability to create the code used for the **CF_WRITE** and **CF_READ** commands inline, which means it does not call its library subroutines, and can tailor itself when reading or writing **WORD**, **DWORD**, or **FLOAT** variables. However, this comes at a price of code memory, as each command is stretched out for speed, not optimisation. It also means that the inline type of commands are really only suitable for the higher speed Compact Flash cards.

If the declare is not used in the BASIC program, the default is not to use inline commands.

CIRCLE

Syntax

CIRCLE *Set_Clear* **,** *Xpos* **,** *Ypos* **,** *Radius*

Overview

Draw a circle on a graphic LCD.

Operators

Set_Clear may be a constant or variable that determines if the circle will set or clear the pixels. A value of 1 will set the pixels and draw a circle, while a value of 0 will clear any pixels and erase a circle.
Xpos may be a constant or variable that holds the X position for the centre of the circle. Can be a value from 0 to 127.
Ypos may be a constant or variable that holds the Y position for the centre of the circle. Can be a value from 0 to 63.
Radius may be a constant or variable that holds the Radius of the circle. Can be a value from 0 to 255.

Example

' Draw a circle at position 63,32 with a radius of 20 pixels

```
INCLUDE "PROTON_G4.INT"

DIM XPOS as BYTE
DIM YPOS as BYTE
DIM RADIUS as BYTE
DIM SET_CLR as BYTE

DELAYMS 200                         ' Wait for PICmicro to stabilise
CLS                                 ' Clear the LCD
XPOS = 63
YPOS = 32
RADIUS = 20
SET_CLR = 1
CIRCLE SET_CLR , XPOS , YPOS , RADIUS
STOP
```

Notes

Because of the aspect ratio of the pixels on the graphic LCD (approx 1.5 times higher than wide) the circle will appear elongated.

See Also : BOX, LINE.

CLEAR

Syntax
CLEAR *Variable* or *Variable.Bit*

CLEAR

Overview
Place a variable or bit in a low state. For a variable, this means filling it with 0's. For a bit this means setting it to 0.

CLEAR has another purpose. If no variable is present after the command, all RAM area on the PICmicro^{tm} used is cleared.

Operators
Variable can be any variable or register.
Variable.Bit can be any variable and bit combination.

Example

```
CLEAR                   ' Clear ALL RAM area
CLEAR VAR1.3            ' Clear bit 3 of VAR1
CLEAR VAR1              ' Load VAR1 with the value of 0
CLEAR STATUS.0          ' Clear the carry flag high
```

Notes
There IS a major difference between the **CLEAR** and **LOW** command. **CLEAR** does not alter the TRIS register if a PORT is targeted.

See Also : SET, LOW, HIGH

CLEARBIT

Syntax
CLEARBIT *Variable* , *Index*

Overview
Clear a bit of a variable or register using a variable index to the bit of interest.

Operators
Variable is a user defined variable, of type **BYTE**, **WORD**, or **DWORD**.
Index is a constant, variable, or expression that points to the bit within *Variable* that requires clearing.

Example

```
        ' Clear then Set each bit of variable EX_VAR
        DEVICE = 16F877
        XTAL = 4
        DIM EX_VAR AS BYTE
        DIM INDEX AS BYTE
        CLS
        EX_VAR = %11111111
AGAIN:
        FOR INDEX = 0 TO 7              ' Create a loop for 8 bits
        CLEARBIT EX_VAR,INDEX           ' Clear each bit of EX_VAR
        PRINT AT 1,1,BIN8 EX_VAR        ' Display the binary result
        DELAYMS 100                     ' Slow things down to see what's happening
        NEXT                            ' Close the loop
        FOR INDEX = 7 TO 0 STEP -1      ' Create a loop for 8 bits
        SETBIT EX_VAR,INDEX             ' Set each bit of EX_VAR
        PRINT AT 1,1,BIN8 EX_VAR        ' Display the binary result
        DELAYMS 100                     ' Slow things down to see what's happening
        NEXT                            ' Close the loop
        GOTO AGAIN                      ' Do it forever
```

Notes
There are many ways to clear a bit within a variable, however, each method requires a certain amount of manipulation, either with rotates, or alternatively, the use of indirect addressing using the FSR, and INDF registers. Each method has its merits, but requires a certain amount of knowledge to accomplish the task correctly. The **CLEARBIT** command makes this task extremely simple using a register rotate method, however, this is not necessarily the quickest method, or the smallest, but it is the easiest. For speed and size optimisation, there is no shortcut to experience.

To CLEAR a known constant bit of a variable or register, then access the bit directly using PORT.n.

```
        PORTA.1 = 0
or
        VAR1.4 = 0
```

If a PORT is targeted by **CLEARBIT**, the TRIS register is **NOT** affected.

See also : **GETBIT, LOADBIT, SETBIT**.

CLS

Syntax
CLS

Overview
Clears the alphanumeric or graphic LCD and places the cursor at the home position i.e. line 1, position 1

Example

```
    CLS                 ' Clear the LCD
    PRINT "HELLO"       ' Display the word "HELLO" on the LCD
    CURSOR 2 , 1        ' Move the cursor to line 2, position 1
    PRINT "WORLD"       ' Display the word "WORLD" on the LCD
```

In the above example, the LCD is cleared using the **CLS** command, which also places the cursor at the home position i.e. line 1, position 1. Next, the word HELLO is displayed in the top left corner. The cursor is then moved to line 2 position 1, and the word WORLD is displayed.

See also : CURSOR, PRINT

CONFIG

Syntax
CONFIG { *configuration fuse settings* }

Overview
Enable or Disable particular fuse settings for the PICmicro^{tm} type used.

Operators
configuration fuse settings vary from PICmicro^{tm} to PICmicro^{tm}, however, certain settings are standard to most PICmicro^{tm} types. Refer to the PICmicro's datasheet for details.

Example

```
' Disable the Watchdog timer and specify an HS_OSC etc, on a PIC16F877 device
CONFIG HS_OSC , WDT_OFF , PWRTE_ON , BODEN_OFF , LVP_OFF , _
      WRTE_ON , CP_OFF , DEBUG_OFF
```

Important.

Because of the complexity that the16-bit core devices require for adjusting their fuse settings, the **CONFIG** directive is not compatible with these devices directly. If the fuse settings requires altering, then dropping into assembler will be required, either by using the ASM - END_ASM directives, or the @ character. Alternatively, the fuse settings may be altered at programming time.

The example below will set the fuses for a 18F452 device: -

```
@ CONFIG_REQ
@ __CONFIG CONFIG1H, OSCS_OFF_1 & HS_OSC_1
@ __CONFIG CONFIG2L, BOR_ON_2 & BORV_20_2 & PWRT_ON_2
@ __CONFIG CONFIG2H, WDT_OFF_2 & WDTPS_128_2
@ __CONFIG CONFIG3H, CCP2MX_ON_3
@ __CONFIG CONFIG4L, STVR_ON_4 & LVP_OFF_4 & DEBUG_OFF_4
```

The fuse names may be found at the end of the PICmicro's .LPB file, situated within the INC folder of the compiler's directory.

Notes
If the **CONFIG** directive is not used within the BASIC program then default values are used. These may be found in the .LPB files in the INC folder.

When using the **CONFIG** directive, always use all the fuse settings for the particular PICmicro^{tm} used.

Any fuse names that are omitted from the **CONFIG** list will normally assume an OFF or DISABLED state. However, this is not always the case, and unpredictable results may occur, or the PICmicro^{tm} may refuse to start up altogether..

Before programming the PICmicro^{tm}, always check the fuse settings at programming time to ensure that the settings are correct.

Always read the datasheet for the particular PICmicro^{tm} of interest, before using this directive.

COUNTER

Syntax
Variable **= COUNTER** *Pin* , *Period*

Overview
Count the number of pulses that appear on *pin* during *period*, and store the result in *variable*.

Operators
Variable is a user-defined variable.
Pin is a Port.Pin constant declaration i.e. PORTA.0.
Period may be a constant, variable, or expression.

Example
```
        ' Count the pulses that occur on PORTA.0 within a 100ms period
        ‘ and displays the results.

        DIM WRD AS WORD             ' Declare a word size variable
        SYMBOL Pin = PORTA.0        ' Assign the input pin to PORTA.0
        CLS
Loop:
        WRD = COUNTER Pin , 100     ' Variable WRD now contains the Count
        CURSOR 1 , 1
        PRINT DEC WRD , " "         ' Display the decimal result on the LCD
        GOTO Loop                   ' Do it indefinitely
```

Notes
The resolution of period is in milliseconds (ms). It obtains its scaling from the oscillator declaration, **DECLARE XTAL.**

COUNTER checks the state of the pin in a concise loop, and counts the rising edge of a transition (low to high).

With a 4MHz oscillator, the pin is checked every 20us, and every 4us with a 20MHz oscillator. From this we can determine that the highest frequency of pulses that may be counted is: -

25KHz using a 4MHz oscillator.
125KHz using a 20MHz oscillator.

See also : PULSIN, RCIN.

CREAD

Syntax
Variable **= CREAD** *Address*

Overview
Read data from anywhere in memory.

Operators
Variable is a user defined variable, of type **BYTE**, **WORD**, or **DWORD**.
Address is a constant, variable, label, or expression that represents any valid address within the PICmicro^{tm}.

Example
```
' Read memory locations within the PICmicro

DEVICE 16F877                    ' Needs to be a 16F87x type PICmicro
DIM VAR1 AS BYTE
DIM WRD AS WORD
DIM Address AS WORD
Address = 1000                   ' Address now holds the base address
VAR1 = CREAD 1000                ' Read 8-bit data at address 1000 into VAR1
WRD = CREAD Address+10           ' Read 14-bit data at address 1000+10
```

Notes
The **CREAD** command takes advantage of the new self-modifying feature that is available in the newer 16F87x, and 18 series devices.

If a **WORD** size variable is used as the assignment, then a 14-bit WORD will be read. If a **BYTE** sized variable is used as the assignment, then 8-bits will be read.

Because the 14-bit core devices are only capable of holding 14 bits to a **WORD**, values greater than 16383 ($3FFF) cannot be read. However, the 16-bit core devices may hold values up to 65535 ($FFFF).

The configuration fuse setting WRTE must be enabled before **CDATA**, **CREAD**, and **CWRITE** may be used, this is the default setting. This enables the self-modifying feature. If the **CONFIG** directive is used, then the WRTE_ON fuse setting must be included in the list: -

```
CONFIG WDT_ON , XT_OSC , WRTE_ON
```

See also : **DATA, CDATA, CONFIG, CWRITE, LDATA, LREAD, READ, RESTORE .**

CURSOR

Syntax
CURSOR *Line , Position*

Overview
Move the cursor position on the LCD to a specified line and position.

Operators
Line is a constant, variable, or expression that corresponds to the line number from 1 to maximum lines.
Position is a constant, variable, or expression that moves the position within the line chosen, from 1 to maximum position.

Example 1

```
        DIM Line AS BYTE
        DIM Xpos AS BYTE
        Line = 2
        Xpos = 1
        CLS                         ' Clear the LCD
        PRINT "HELLO"               ' Display the word "HELLO" on the LCD
        CURSOR Line , Xpos          ' Move the cursor to line 2, position 1
        PRINT "WORLD"               ' Display the word "WORLD" on the LCD
```

In the above example, the LCD is cleared using the CLS command, which also places the cursor at the home position i.e. line 1, position 1. Next, the word HELLO is displayed in the top left corner. The cursor is then moved to line 2 position 1, and the word WORLD is displayed.

Example 2

```
        DIM Xpos AS BYTE
        DIM Ypos AS BYTE
Again:
        Ypos = 1                        ' Start on line 1
        FOR Xpos = 1 TO 16              ' Create a loop of 16
        CLS                             ' Clear the LCD
        CURSOR Ypos , Xpos              ' Move the cursor to position Ypos,Xpos
        PRINT "*"                       ' Display the character
        DELAYMS 100
        NEXT
        Ypos = 2                        ' Move to line 2
        FOR Xpos = 16 TO 1 STEP -1      ' Create another loop, this time reverse
        CLS                             ' Clear the LCD
        CURSOR Ypos , Xpos              ' Move the cursor to position Ypos,Xpos
        PRINT "*"                       ' Display the character
        DELAYMS 100
        NEXT
        GOTO Again                      ' Repeat forever
```

Example 2 displays an asterisk character moving around the perimeter of a 2-line by 16 character LCD.

See also : CLS, PRINT

CWRITE

Syntax

CWRITE *Address* , **[** *Variable* { , *Variable…*} **]**

Overview

Write data to anywhere in memory.

Operators

Variable can be a constant, variable, or expression.
Address is a constant, variable, label, or expression that represents any valid address within the PICmicro^{tm}.

Example

```
' Write to memory location 2000+ within the PICmicro

DEVICE 16F877                           ' Needs to be a 16F87x type PICmicro
DIM VAR1 AS BYTE
DIM WRD AS WORD
DIM Address AS WORD
Address = 2000                          ' Address now holds the base address
VAR1 = 234
 WRD = 1043
CWRITE Address, [10, VAR1, WRD ]        ' Write to address 2000 +
ORG 2000
```

Notes

The **CWRITE** command takes advantage of the new self-modifying feature that is available in the newer 16F87x, and 18 series devices.

If a **WORD** size variable is used as the assignment, then a 14-bit **WORD** will be written. If a **BYTE** sized variable is used as the assignment, then 8-bits will be written.

Because the 14-bit core devices are only capable of holding 14 bits to a **WORD**, values greater than 16383 ($3FFF) cannot be written. However, the 16-bit core devices may hold values up to 65535 ($FFFF).

The configuration fuse setting WRTE must be enabled before **CDATA**, **CREAD**, and **CWRITE** may be used, this is the default setting. This enables the self-modifying feature. If the CONFIG directive is used, then the WRTE_ON fuse setting must be included in the list: -

```
 CONFIG WDT_ON , XT_OSC , WRTE_ON
```

See also : CDATA, CONFIG, CREAD, ORG.

DATA

Syntax
DATA { *alphanumeric data* }

Overview
Place information into code memory using the RETLW instruction when used with 14-bit core devices, and FLASH memory when using a 16-bit core device. For access by READ.

Operators
alphanumeric data can be a 8,16, 32 bit value, or floating point values, or any alphabetic character or string enclosed in quotes.

Example
```
DIM VAR1 AS BYTE
DATA 5 , 8 , "fred" , 12
RESTORE
READ VAR1                  ' Variable VAR1 will now contain the value 5
READ VAR1                  ' Variable VAR1 will now contain the value 8
' Pointer now placed at location 4 in our data table i.e. "r"
RESTORE 3
' VAR1 will now contain the value 114 i.e. the 'r' character in decimal
READ VAR1
```

The data table is defined with the values 5,8,102,114,101,100,12 as "fred" equates to f:102, r:114, e:101, d:100 in decimal. The table pointer is immediately restored to the beginning of the table. This is not always required but as a general rule, it is a good idea to prevent table reading from overflowing.
The first **READ** VAR1, takes the first item of data from the table and increments the table pointer. The next **READ** VAR1 therefore takes the second item of data. **RESTORE** 3 moves the table pointer to the fourth location (first location is pointer position 0) in the table - in this case where the letter 'r' is. **READ** VAR1 now retrieves the decimal equivalent of 'r' which is 114.

Notes
DATA tables should be placed near the beginning of your program. Attempts to read past the end of the table will result in errors and unpredictable results.

Only one instance of **DATA** is allowed per program, however, they be of any length. If the alphanumeric contents of the **DATA** statement will not fit on one line then the extra information must be placed directly below using another **DATA** statement: -

```
DATA "HELLO "
DATA "WORLD"
```

is the same as: -

```
DATA "HELLO WORLD"
```

16-bit device requirements.

The compiler uses a different method of holding information in a **DATA** statement when using 16-bit core devices. It uses the unique capability of these devices to read 16-bit values from their own code space, which offers optimisations when values larger than 8-bits are stored. However, because the 16-bit core devices are **BYTE** oriented, as opposed to the 14-bit types which are **WORD** oriented. The **DATA** table should contain an even number of values, or corruption may occur on the last value read. For example: -

DATA 1,2,3,"123"

DATA 1,2,3,"12"

A **DATA** table containing an ODD amount of values will produce a compiler WARNING message.

DATA, **READ**, and **RESTORE** are a remnant of previous compiler versions and have been superceded by **LDATA**, **LREAD**, **LREAD8**, **LREAD16**, **LREAD32**, **CDATA**, and **CREAD**. Using **DATA**, **READ**, or **RESTORE** is not recommended for new programs.

See also: CDATA, CREAD, CWRITE, LDATA, LREAD, READ , RESTORE.

DEC

Syntax
DEC ***Variable***

Overview
Decrement a variable i.e. VAR1 = VAR1 - 1

Operators
Variable is a user defined variable

Example

```
VAR1 = 11
REPEAT
DEC VAR1
PRINT DEC VAR1 , " "
DELAYMS 200
UNTIL VAR1 = 0
```

The above example shows the equivalent to the FOR-NEXT loop: -

```
FOR VAR1 = 10 TO 0 STEP -1 : NEXT
```

See also : INC.

DECLARE

Syntax
[DECLARE] *code modifying directive* = *modifying value*

Overview
Adjust certain aspects of the produced code, i.e. Crystal frequency, LCD port and pins, serial baud rate etc.

Operators
code modifying directive is a set of pre-defined words. See list below.
modifying value is the value that corresponds to the command. See list below.

The **DECLARE** directive is an indispensable part of the compiler. It moulds the library subroutines, and passes essential user information to them. However, the **DECLARE** part of a declare directive is optional.

For example, instead of using: -

```
DECLARE XTAL 4
```

The text: -

```
XTAL = 4
```

May be used.

Notice that there is an optional equals character separating the declare command and the value to pass. The structure will still be referred to as a **DECLARE** in the manual, help file, and any future projects.

MISC Declares.

DECLARE WATCHDOG = **ON** or **OFF**, or **TRUE** or **FALSE**, or 1, 0
The **WATCHDOG DECLARE** directive enables or disables the watchdog timer. It also sets the PICmicro's CONFIG fuses for no watchdog. In addition, it removes any **CLRWDT** mnemonics from the assembled code, thus producing slightly smaller programs. The default for the compiler is **WATCHDOG OFF**, therefore, if the watchdog timer is required, then this **DECLARE** will need to be invoked.

The **WATCHDOG DECLARE** can be issued multiple times within the BASIC code, enabling and disabling the watchdog timer as and when required.

DECLARE BOOTLOADER = **ON** or **OFF**, or **TRUE** or **FALSE**, or 1, 0
The **BOOTLOADER DECLARE** directive enables or disables the special settings that a serial bootloader requires at the start of code space. This directive is ignored if a PICmicro^{tm} without bootloading capabilities is targeted.

Disabling the bootloader will free a few bytes from the code produced. This doesn't seem a great deal, however, these few bytes may be the difference between a working or non-working program. The default for the compiler is **BOOTLOADER ON**

DECLARE SHOW_SYSTEM_VARIABLES = **ON** or **OFF**, or **TRUE** or **FALSE**, or 1, 0

When using the PROTEUS VSM to simulate BASIC code, it is sometimes beneficial to observe the behaviour of the compiler's SYSTEM variables that are used for its library routines. The **SHOW_SYSTEM_VARIABLES DECLARE** enables or disables this option.

DECLARE FSR_CONTEXT_SAVE = **ON** or **OFF**, or **TRUE** or **FALSE**, or 1, 0
When using HARDWARE interrupts, it is not always necessary to save the FSR register. So in order to save code space and time spent within the interrupt handler, the **FSR_CONTEXT_SAVE DECLARE** can enable or disable the auto CONTEXT saving and restoring of the FSR register.

For 16-bit core devices, this will enable/disable FSR0 context handling. If **STRING** variables are used in the BASIC program, the FSR1L/H register pair will also be saved/restored. And FSR2L/H registers will be saved/restored if a stack is implemented.

DECLARE PLL_REQ = **ON** or **OFF**, or **TRUE** or **FALSE**, or 1, 0
Most 16-bit core devices have a built in PLL (Phase Locked Loop) that can multiply the oscillator by a factor of 4. This is set by the fuses at programming time, and the **PLL_REQ DECLARE** enables or disables the PLL fuse. Using the PLL fuse allows a 1:1 ratio of instructions to clock cycles instead of the normal 4:1 ratio. It can be used with XTAL settings from 4 to 10MHz. Note that the compiler will automatically set it's frequency to a multiple of 4 if the **PLL_REQ DECLARE** is used to enable the PLL fuse. For example, if a 4MHz XTAL setting is declared, and the **PLL_REQ DECLARE** is used in the BASIC program, the compiler will automatically set itself up as using a 16MHz XTAL. i.e. 4 * 4. Thus keeping the timings for library functions correct.

DECLARE WARNINGS = **ON** or **OFF**, or **TRUE** or **FALSE**, or 1, 0
The **WARNINGS DECLARE** directive enables or disables the compiler's warning messages. This can have disastrous results if a warning is missed or ignored, so use this directive sparingly, and at your own peril.

The **WARNINGS DECLARE** can be issued multiple times within the BASIC code, enabling and disabling the warning messages at key points in the code as and when required.

DECLARE REMINDERS = **ON** or **OFF**, or **TRUE** or **FALSE**, or 1, 0
The **REMINDERS DECLARE** directive enables or disables the compiler's reminder messages. The compiler issues a reminder for a reason, so use this directive sparingly, and at your own peril.

The **REMINDERS DECLARE** can be issued multiple times within the BASIC code, enabling and disabling the warning messages at key points in the code as and when required.

DECLARE LABEL_BANK_RESETS = **ON** or **OFF**, or **TRUE** or **FALSE**, or 1, 0
The compiler has very intuitive RAM bank handling, however, if you think that an anomaly is occurring due to misplaced or mishandled RAM bank settings, you can issue this **DECLARE** and it will reset the RAM bank on every BASIC label, which will force the compiler to re-calculate its bank settings. If nothing else, it will reassure you that bank handling is not the cause of the problem, and you can get on with finding the cause of the programming problem. However, if it does cure a problem then please let me know and I will make sure the anomaly is fixed as quickly as possible.

Using this **DECLARE** will increase the size of the code produced, as it will place **BCF** mnemonics in the case of a 12 or 14-bit core device, and a **MOVLB** mnemonic in the case of a 16-bit core device.

The **LABEL_BANK_RESETS DECLARE** can be issued multiple times within the BASIC code, enabling and disabling the bank resets at key points in the code as and when required. See LINE LABELS for more information.

DECLARE FLOAT_DISPLAY_TYPE = LARGE or STANDARD
By default, the compiler uses a relatively small routine for converting floating point values to decimal, ready for **RSOUT**, **PRINT**, **STR$** etc. However, because of its size, it does not perform any rounding of the value first, and is only capable of converting relatively small values. i.e. approx 6 digits of accuracy. In order to produce a more accurate result, the compiler needs to use a larger routine. This is implemented by using the above **DECLARE**.

Using the LARGE model for the above **DECLARE** will trigger the compiler into using the more accurate floating point to decimal routine. Note that even though the routine is larger than the standard converter, it actually operates much faster.

The compiler defaults to STANDARD if the **DECLARE** is not issued in the BASIC program.

DECLARE ICD_REQ = **ON** or **OFF**, or **TRUE** or **FALSE**, or 1, 0
When the **ICD_REQ DECLARE** is set to **ON**, the compiler configures itself so that the Microchip ICD2 In-Circuit-Debugger can be used. The ICD2 is very invasive to the program, in so much that it requires certain RAM areas for itself. This can be up to 26 bytes on some PICmicros. It also requires 2 call-stack levels, so be careful when using a 14-bit core device or you may overflow the call-stack with disastrous results.

With a 14-bit core device, the top of BANK0 RAM is reserved for the ICD, for 16-bit core devices, the RAM usage is not so noticeable because of its linear nature, but it still requires 12 bytes reserved at the end of RAM.

The list below highlights the requirements for the ICD2 with the most recent PICmicros that support it.

Device	RAM Usage
P12F675	$54 - $5F
P12F629	$54 - $5F
P16F627A	$70 - $7F
P16F628A	$70 - $7F
P16F648A	$70 - $7F
P16F630	$54 - $5F
P16F676	$54 - $5F
P16F87	$70 - $7F
P16F88	$70 - $7F
P16F818	$65 - $7F
P16F819	$65 - $7F
P16F870	$70 - $7F, $B5 - $BF
P16F871	$70 - $7F, $B5 - $BF
P16F872	$70 - $7F, $B5 - $BF

P16F873/873A	$74 - $7F
P16F874/874A	$74 - $7F
P16F876/876A	$70 - $7F
P16F877/877A	$70 - $7F
P18F242/442	$02F4 - $02FF
P18F252/452	$05F4 - $05FF
P18F248/448	$02F4 - $02FF
P18F258/458	$05F4 - $05FF
P18F1220	$F4 - $FF
P18F1320	$F4 - $FF
P18F2220/4220	$01F4 - $01FF
P18F2320/4320	$01F4 - $01FF
P18F2331/4331	$02F4 - $02FF
P18F2431/4431	$02F4 - $02FF
P18F2680/4680	$0CF4 - $0CFF
P18F6520/8520	$0EF4 - $0EFF
P18F6620/8620	$0EF4 - $0EFF
P18F6720/8720	$0EF4 - $0EFF

Whenever ICD2 compatibility is enabled, the compiler will automatically deduct the reserved RAM from the available RAM within the PICmicro^{tm}, therefore you must take this into account when declaring variables. Remember, there aren't as many variables available with the ICD enabled.

If the ICD is enabled along with hardware interrupts, the compiler will also reserve the RAM required for context saving and restoring. This also will be reflected in the amount of RAM available within the PICmicro^{tm}.

Note that the above list will increase as new PICmicro^{tm} devices are released. Therefore, the help file will contain the most up to date listing of compatible devices.

TRIGONOMETRY Declares.

When using a 16-bit core device, the compiler defaults to using floating point trigonometry functions **SIN** and **COS**, as well as **SQR** . However, if only the BASIC Stamp compatible integer functions are required, they can be enabled by the following three declares. Note that by enabling the integer type function, the floating point function will be disabled permanently within the BASIC code. As with most of the declares, only one of any type is recognised per program.

DECLARE STAMP_COMPATIBLE_COS = **ON** or **OFF**, or **TRUE** or **FALSE**, or 1, 0
Enable/Disable floating point **COS** function in favour of the BASIC Stamp compatible integer **COS** function.

DECLARE STAMP_COMPATIBLE_SIN = **ON** or **OFF**, or **TRUE** or **FALSE**, or 1, 0
Enable/Disable floating point **SIN** function in favour of the BASIC Stamp compatible integer **SIN** function.

DECLARE STAMP_COMPATIBLE_SQR = **ON** or **OFF**, or **TRUE** or **FALSE**, or 1, 0
Enable/Disable floating point **SQR** (square root) function in favour of the BASIC Stamp compatible integer **SQR** function.

ADIN Declares.

DECLARE ADIN_RES 8 , 10 , or 12.
Sets the number of bits in the result.

If this **DECLARE** is not used, then the default is the resolution of the PICmicro^{tm} type used. For example, the new 16F87X range will result in a resolution of 10-bits, while the standard PICmicro^{tm} types will produce an 8-bit result. Using the above **DECLARE** allows an 8-bit result to be obtained from the 10-bit PICmicro^{tm} types, but NOT 10-bits from the 8-bit types.

DECLARE ADIN_TAD 2_FOSC , 8_FOSC , 32_FOSC , or FRC.
Sets the ADC's clock source.

All compatible PICmicros have four options for the clock source used by the ADC; 2_FOSC, 8_FOSC, and 32_FOSC, are ratios of the external oscillator, while FRC is the PICmicro's internal RC oscillator. Instead of using the predefined names for the clock source, values from 0 to 3 may be used. These reflect the settings of bits 0-1 in register ADCON0.

Care must be used when issuing this **DECLARE**, as the wrong type of clock source may result in poor resolution, or no conversion at all. If in doubt use FRC which will produce a slight reduction in resolution and conversion speed, but is guaranteed to work first time, every time. FRC is the default setting if the **DECLARE** is not issued in the BASIC listing.

DECLARE ADIN_STIME 0 to 65535 microseconds (us).
Allows the internal capacitors to fully charge before a sample is taken. This may be a value from 0 to 65535 microseconds (us).

A value too small may result in a reduction of resolution. While too large a value will result in poor conversion speeds without any extra resolution being attained.

A typical value for **ADIN_STIME** is 50 to 100. This allows adequate charge time without loosing too much conversion speed.

But experimentation will produce the right value for your particular requirement. The default value if the **DECLARE** is not used in the BASIC listing is 50.

BUSIN - BUSOUT Declares.

DECLARE SDA_PIN PORT **.** PIN
Declares the port and pin used for the data line (SDA). This may be any valid port on the PICmicro^{tm}. If this declare is not issued in the BASIC program, then the default Port and Pin is PORTA.0

DECLARE SCL_PIN PORT **.** PIN

Declares the port and pin used for the clock line (SCL). This may be any valid port on the PICmicro^{tm}. If this declare is not issued in the BASIC program, then the default Port and Pin is PORTA.1

DECLARE SLOW_BUS ON - **OFF** or 1 - 0
Slows the bus speed when using an oscillator higher than 4MHz.

The standard speed for the I^{2}C bus is 100KHz. Some devices use a higher bus speed of 400KHz. If you use an 8MHz or higher oscillator, the bus speed may exceed the devices specs, which will result in intermittent writes or reads, or in some cases, none at all. Therefore, use this **DECLARE** if you are not sure of the device's spec. The datasheet for the device used will inform you of its bus speed.

DECLARE BUS_SCL ON - **OFF**, 1 - 0 or **TRUE** - **FALSE**
Eliminates the necessity for a pull-up resistor on the SCL line.

The I^{2}C protocol dictates that a pull-up resistor is required on both the SCL and SDA lines, however, this is not always possible due to circuit restrictions etc, so once the **BUS_SCL ON DECLARE** is issued at the top of the program, the resistor on the SCL line can be omitted from the circuit. The default for the compiler if the **BUS_SCL DECLARE** is not issued, is that a pull-up resistor is required.

HBUSIN - HBUSOUT Declare.

DECLARE HBUS_BITRATE Constant 100, 400, 1000 etc.
The standard speed for the I^{2}C bus is 100KHz. Some devices use a higher bus speed of 400KHz. The above **DECLARE** allows the I^{2}C bus speed to be increased or decreased. Use this **DECLARE** with caution, as too high a bit rate may exceed the device's specs, which will result in intermittent transactions, or in some cases, no transactions at all. The datasheet for the device used will inform you of its bus speed. The default bit rate is the standard 100KHz.

HSERIN, HSEROUT, HRSIN and HRSOUT Declares.

DECLARE HSERIAL_BAUD Constant value
Sets the BAUD rate that will be used to receive a value serially. The baud rate is calculated using the **XTAL** frequency declared in the program. The default baud rate if the **DECLARE** is not included in the program listing is 2400 baud.

DECLARE HSERIAL_RCSTA Constant value (0 to 255)
HSERIAL_RCSTA, sets the respective PICmicro^{tm} hardware register RCSTA, to the value in the **DECLARE**. See the Microchip data sheet for the device used for more information regarding this register.

DECLARE HSERIAL_TXSTA Constant value (0 to 255)
HSERIAL_TXSTA, sets the respective PICmicro^{tm} hardware register, TXSTA, to the value in the **DECLARE**. See the Microchip data sheet for the device used for more information regarding this register. The TXSTA register BRGH bit (bit 2) controls the high speed mode for the baud rate generator. Certain baud rates at certain oscillator speeds require this bit to be set to operate properly. To do this, set **HSERIAL_TXSTA** to a value of $24 instead of the default $20. Refer to the Microchip data sheet for the hardware serial port baud rate tables and additional information.

DECLARE HSERIAL_PARITY ODD or **EVEN**

Enables/Disables parity on the serial port. For **HRSIN**, **HRSOUT**, **HSERIN** and **HSEROUT**. The default serial data format is 8N1, 8 data bits, no parity bit and 1 stop bit. 7E1 (7 data bits, even parity, 1 stop bit) or 7O1 (7data bits, odd parity, 1 stop bit) may be enabled using the **HSERIAL_PARITY** declare.

```
DECLARE HSERIAL_PARITY = EVEN         ' Use if even parity desired
DECLARE HSERIAL_PARITY = ODD          ' Use if odd parity desired
```

DECLARE HSERIAL_CLEAR ON or **OFF**
Clear the overflow error bit before commencing a read.

Because the hardware serial port only has a 2-byte input buffer, it can easily overflow is characters are not read from it often enough. When this occurs, the USART stops accepting any new characters, and requires resetting. This overflow error can be reset by strobing the CREN bit within the RCSTA register. Example: -

```
    RCSTA.4 = 0
    RCSTA.4 = 1
or
    CLEAR RCSTA.4
    SET RCSTA.4
```

Alternatively, the **HSERIAL_CLEAR** declare can be used to automatically clear this error, even if no error occurred. However, the program will not know if an error occurred while reading, therefore some characters may be lost.

```
DECLARE HSERIAL_CLEAR = ON
```

Second USART Declares for use with HRSIN2, HSERIN2, HRSOUT2 and HSEROUT2.

DECLARE HSERIAL2_BAUD Constant value
Sets the BAUD rate that will be used to transmit a value serially. The baud rate is calculated using the **XTAL** frequency declared in the program. The default baud rate if the **DECLARE** is not included in the program listing is 2400 baud.

DECLARE HSERIAL2_RCSTA Constant value (0 to 255)
HSERIAL2_RCSTA, sets the respective PICmicro^{tm} hardware register RCSTA2, to the value in the **DECLARE**. See the Microchip data sheet for the device used for more information regarding this register. Refer to the upgrade manual pages for a description of the RCSTA2 register.

DECLARE HSERIAL2_TXSTA Constant value (0 to 255)
HSERIAL2_TXSTA, sets the respective PICmicro^{tm} hardware register, TXSTA2, to the value in the **DECLARE**. See the Microchip data sheet for the device used for more information regarding this register. The TXSTA register BRGH2 bit (bit 2) controls the high speed mode for the baud rate generator. Certain baud rates at certain oscillator speeds require this bit to be set to operate properly. To do this, set **HSERIAL2_TXSTA** to a value of $24 instead of the default $20. Refer to the Microchip data sheet for the hardware serial port baud rate tables and additional information. Refer to the upgrade manual pages for a description of the TXSTA2 register.

DECLARE HSERIAL2_PARITY ODD or **EVEN**
Enables/Disables parity on the serial port. For **HRSOUT2**, **HRSIN2**, **HSEROUT2** and **HSERIN2**. The default serial data format is 8N1, 8 data bits, no parity bit and 1 stop bit. 7E1 (7 data bits, even parity, 1 stop bit) or 7O1 (7data bits, odd parity, 1 stop bit) may be enabled using the **HSERIAL2_PARITY** declare.

```
DECLARE HSERIAL2_PARITY = EVEN       ' Use if even parity desired
DECLARE HSERIAL2_PARITY = ODD        ' Use if odd parity desired
```

DECLARE HSERIAL2_CLEAR ON or **OFF**
Clear the overflow error bit before commencing a read.

Because the hardware serial port only has a 2-byte input buffer, it can easily overflow is characters are not read from it often enough. When this occurs, the USART stops accepting any new characters, and requires resetting. This overflow error can be reset by strobing the CREN bit within the RCSTA2 register. Example: -

```
    RCSTA2.4 = 0
    RCSTA2.4 = 1
or
    CLEAR RCSTA2.4
    SET RCSTA2.4
```

Alternatively, the **HSERIAL2_CLEAR** declare can be used to automatically clear this error, even if no error occurred. However, the program will not know if an error occurred while reading, therefore some characters may be lost.

```
DECLARE HSERIAL2_CLEAR = ON
```

HPWM Declares.

Some devices, such as the PIC16F62x, and PIC18F4xx, have alternate pins that may be used for **HPWM**. The following **DECLARES** allow the use of different pins: -

```
DECLARE CCP1_PIN PORT . PIN      ' Select HPWM port and bit for CCP1 module. i.e. ch 1
DECLARE CCP2_PIN PORT . PIN      ' Select HPWM port and bit for CCP2 module. i.e. ch 2
```

LCD PRINT Declares.

DECLARE LCD_DTPIN PORT **.** PIN
Assigns the Port and Pins that the LCD's DT lines will attach to.

The LCD may be connected to the PICmicro^{tm} using either a 4-bit bus or an 8-bit bus. If an 8-bit bus is used, all 8 bits must be on one port. If a 4-bit bus is used, it must be connected to either the bottom 4 or top 4 bits of one port. For example: -

```
DECLARE LCD_DTPIN PORTB.4         ' Used for 4-line interface.

DECLARE LCD_DTPIN PORTB.0         ' Used for 8-line interface.
```

In the above examples, PORTB is only a personal preference. The LCD's DT lines can be attached to any valid port on the PICmicro^{tm}. If the DECLARE is not used in the program, then the default Port and Pin is PORTB.4, which assumes a 4-line interface.

DECLARE LCD_ENPIN PORT **.** PIN
Assigns the Port and Pin that the LCD's EN line will attach to. This also assigns the graphic LCD's EN pin, however, the default value remains the same as for the alphanumeric type, so this will require changing.

If the DECLARE is not used in the program, then the default Port and Pin is PORTB.2.

DECLARE LCD_RSPIN PORT **.** PIN
Assigns the Port and Pins that the LCD's RS line will attach to. This also assigns the graphic LCD's RS pin, however, the default value remains the same as for the alphanumeric type, so this will require changing.

If the DECLARE is not used in the program, then the default Port and Pin is PORTB.3.

DECLARE LCD_INTERFACE 4 or 8
Inform the compiler as to whether a 4-line or 8-line interface is required by the LCD.

If the DECLARE is not used in the program, then the default interface is a 4-line type.

DECLARE LCD_LINES 1 , 2 , or 4
Inform the compiler as to how many lines the LCD has.

LCD's come in a range of sizes, the most popular being the 2 line by 16 character types. However, there are 4-line types as well. Simply place the number of lines that the particular LCD has into the declare.

If the **DECLARE** is not used in the program, then the default number of lines is 2.

GRAPHIC LCD Declares.

DECLARE LCD_TYPE 1 or 0 , **GRAPHIC** or **ALPHA**
Inform the compiler as to the type of LCD that the PRINT command will output to. If GRAPHIC or 1 is chosen then any output by the **PRINT** command will be directed to a graphic LCD based on the Samsung S6B0108 chipset. A value of 0 or ALPHA, or if the **DECLARE** is not issued will target the standard alphanumeric LCD type

Targeting the graphic LCD will also enable commands such as **PLOT**, **UNPLOT**, **LCDREAD**, and **LCDWRITE**.

DECLARE LCD_DTPORT PORT
Assign the port that will output the 8-bit data to the graphic LCD.

If the **DECLARE** is not used, then the default port is PORTB.

DECLARE LCD_RWPIN PORT **.** PIN
Assigns the Port and Pin that the graphic LCD's RW line will attach to.

If the **DECLARE** is not used in the program, then the default Port and Pin is PORTC.0.

DECLARE LCD_CS1PIN PORT **.** PIN
Assigns the Port and Pin that the graphic LCD's CS1 line will attach to.

If the **DECLARE** is not used in the program, then the default Port and Pin is PORTC.0.

DECLARE LCD_CS2PIN PORT **.** PIN
Assigns the Port and Pin that the graphic LCD's CS2 line will attach to.

If the DECLARE is not used in the program, then the default Port and Pin is PORTC.0.

DECLARE INTERNAL_FONT ON - **OFF**, 1 or 0
The graphic LCD's that are compatible with PROTON+ are non-intelligent types, therefore, a separate character set is required. This may be in one of two places, either externally, in an I^{2}C eeprom, or internally in a **CDATA** table.

If an external font is chosen, the I^{2}C eeprom must be connected to the specified SDA and SCL pins (as dictated by **DECLARE SDA** and **DECLARE SCL**).

If an internal font is chosen, it must be on a PICmicro^{tm} device that has self modifying code features, such as the 16F87X, or 18XXXX range.

The **CDATA** table that contains the font must have a label, named FONT: preceding it. For example: -

```
FONT: CDATA $7E , $11 , $11 , $11 , $7E , $0          ' Chr "A"
      CDATA $7F , $49 , $49 , $49 , $36 , $0          ' Chr "B"
      { rest of font table }
```

The font table may be anywhere in memory, however, it is best placed after the main program code.

If the **DECLARE** is omitted from the program, then an external font is the default setting.

DECLARE FONT_ADDR 0 to 7
Set the slave address for the I^2C eeprom that contains the font.

When an external source for the font is chosen, it may be on any one of 8 eeproms attached to the I^2C bus. So as not to interfere with any other eeproms attached, the slave address of the eeprom carrying the font code may be chosen.

If the **DECLARE** is omitted from the program, then address 0 is the default slave address of the font eeprom.

DECLARE GLCD_CS_INVERT ON - **OFF**, 1 or 0
Some graphic LCD types have inverters on their CS lines. Which means that the LCD displays left hand data on the right side, and vice-versa. The **GLCD_CS_INVERT DECLARE**, adjusts the library LCD handling library subroutines to take this into account.

DECLARE GLCD_STROBE_DELAY 0 to 65535 us (microseconds).
Create a delay of n microseconds between strobing the EN line of the graphic LCD. This can help noisy, or badly decoupled circuits overcome random bits appearing on the LCD. The default if the **DECLARE** is not used in the BASIC program is a delay of 0.

KEYPAD Declare.

DECLARE KEYPAD_PORT PORT
Assigns the Port that the keypad is attached to.

The keypad routine requires pull-up resistors, therefore, the best Port for this device is PORTB which comes equipped with internal pull-ups. If the **DECLARE** is not used in the program, then PORTB is the default Port.

RSIN - RSOUT Declares.

DECLARE RSOUT_PIN PORT **.** PIN
Assigns the Port and Pin that will be used to output serial data from the **RSOUT** command. This may be any valid port on the PICmicro^{tm}.

If the **DECLARE** is not used in the program, then the default Port and Pin is PORTB.0.

DECLARE RSIN_PIN PORT **.** PIN
Assigns the Port and Pin that will be used to input serial data by the **RSIN** command. This may be any valid port on the PICmicro^{tm}.

If the **DECLARE** is not used in the program, then the default Port and Pin is PORTB.1.

DECLARE RSOUT_MODE INVERTED , **TRUE** or 1 , 0
Sets the serial mode for the data transmitted by **RSOUT**. This may be inverted or true. Alternatively, a value of 1 may be substituted to represent inverted, and 0 for true.

If the **DECLARE** is not used in the program, then the default mode is INVERTED.

DECLARE RSIN_MODE INVERTED , **TRUE** or 1 , 0
Sets the serial mode for the data received by **RSIN**. This may be inverted or true. Alternatively, a value of 1 may be substituted to represent inverted, and 0 for true.

If the **DECLARE** is not used in the program, then the default mode is INVERTED.

DECLARE SERIAL_BAUD 0 to 65535 bps (baud)
Informs the **RSIN** and **RSOUT** routines as to what baud rate to receive and transmit data.

Virtually any baud rate may be transmitted and received, but there are standard bauds, namely: -

300, 600, 1200, 2400, 4800, 9600, and 19200.

When using a 4MHz crystal, the highest baud rate that is reliably achievable is 9600. However, an increase in the oscillator speed allows higher baud rates to be achieved, including 38400 baud.

If the **DECLARE** is not used in the program, then the default baud is 9600.

DECLARE RSOUT_PACE 0 to 65535 microseconds (us)
Implements a delay between characters transmitted by the **RSOUT** command.

On occasion, the characters transmitted serially are in a stream that is too fast for the receiver to catch, this results in missed characters. To alleviate this, a delay may be implemented between each individual character transmitted by **RSOUT**.

If the **DECLARE** is not used in the program, then the default is no delay between characters.

DECLARE RSIN_TIMEOUT 0 to 65535 milliseconds (ms)
Sets the time, in ms, that **RSIN** will wait for a start bit to occur.

RSIN waits in a tight loop for the presence of a start bit. If no timeout parameter is issued, then it will wait forever.

The RSIN command has the **option** of jumping out of the loop if no start bit is detected within the time allocated by timeout.

If the **DECLARE** is not used in the program, then the default timeout value is 10000ms which is 10 seconds.

SERIN - SEROUT Declare.

If communications are with existing software or hardware, its speed and mode will determine the choice of baud rate and mode. In general, 7-bit/even-parity (7E) mode is used for text, and 8-bit/no-parity (8N) for byte-oriented data. Note: the most common mode is 8-bit/no-parity, even when the data transmitted is just text. Most devices that use a 7-bit data mode do so in order to take advantage of the parity feature. Parity can detect some communication errors, but to use it you lose one data bit. This means that incoming data bytes transferred in 7E (even-parity) mode can only represent values from 0 to 127, rather than the 0 to 255 of 8N (no-parity) mode.

The compiler's serial commands **SERIN** and **SEROUT** have the option of still using a parity bit with 4 to 8 data bits. This is through the use of a **DECLARE**: -

With parity disabled (the default setting): -

DECLARE SERIAL_DATA 4 ' Set SERIN and SEROUT data bits to 4
DECLARE SERIAL_DATA 5 ' Set SERIN and SEROUT data bits to 5
DECLARE SERIAL_DATA 6 ' Set SERIN and SEROUT data bits to 6
DECLARE SERIAL_DATA 7 ' Set SERIN and SEROUT data bits to 7
DECLARE SERIAL_DATA 8 ' Set SERIN and SEROUT data bits to 8 (default)

With parity enabled: -

DECLARE SERIAL_DATA 5 ' Set SERIN and SEROUT data bits to 4
DECLARE SERIAL_DATA 6 ' Set SERIN and SEROUT data bits to 5

DECLARE SERIAL_DATA 7 ' Set SERIN and SEROUT data bits to 6
DECLARE SERIAL_DATA 8 ' Set SERIN and SEROUT data bits to 7 (default)
DECLARE SERIAL_DATA 9 ' Set SERIN and SEROUT data bits to 8

SERIAL_DATA data bits may range from 4 bits to 8 (the default if no **DECLARE** is issued). Enabling parity uses one of the number of bits specified.

Declaring **SERIAL_DATA** as 9 allows 8 bits to be read and written along with a 9th parity bit.

Parity is a simple error-checking feature. When a serial sender is set for even parity (the mode the compiler supports) it counts the number of 1s in an outgoing byte and uses the parity bit to make that number even. For example, if it is sending the 7-bit value: %0011010, it sets the parity bit to 1 in order to make an even number of 1s (four).

The receiver also counts the data bits to calculate what the parity bit should be. If it matches the parity bit received, the serial receiver assumes that the data was received correctly. Of course, this is not necessarily true, since two incorrectly received bits could make parity seem correct when the data was wrong, or the parity bit itself could be bad when the rest of the data was correct.

Many systems that work exclusively with text use 7-bit/ even-parity mode. For example, to receive one data byte through bit-0 of PORTA at 9600 baud, 7E, inverted:

SHIN - SHOUT Declare.

DECLARE SHIFT_DELAYUS 0 - 65535 microseconds (us)
Extend the active state of the shift clock.

The clock used by **SHIN** and **SHOUT** runs at approximately 45KHz dependent on the oscillator. The active state is held for a minimum of 2 microseconds. By placing this declare in the program, the active state of the clock is extended by an additional number of microseconds up to 65535 (65.535 milliseconds) to slow down the clock rate.

If the **DECLARE** is not used in the program, then the default is no clock delay.

Compact Flash Interface Declares

There are several declares that need to be manipulated when interfacing to a Compact Flash card. There are the obvious port pins, but there are also some declares that optimise or speed up access to the card.

DECLARE CF_DTPORT PORT
This declare assigns the Compact Flash card's data lines. The data line consists of 8-bits so it is only suitable for ports that contain 8-bits such as PORTB, PORTC, PORTD etc.

DECLARE LCD_ADPORT PORT
This declare assigns the Compact Flash card's address lines. The address line consists of 3-bits, but A0 of the compact flash card must be attached to bit-0 of whatever port is used. For example, if the Compact Flash card's address lines were attached to PORTA of the PICmicro^{tm}, then A0 of the CF card must attach to PORTA.0, A1 or the CF card must attach to PORTA.1, and A2 of the CF card must attach to PORTA.2.

The CF access commands will mask the data before transferring it to the particular port that is being used so that the rest of it's pins are not effected. PORTE is perfect for the address lines as it contains only 3 pins on a 40-pin device, and the compiler can make full use of this by using the **CF_ADPORT_MASK** declare.

DECLARE CF_ADPORT_MASK = **ON** or **OFF**, or **TRUE** or **FALSE**, or 1, 0
Both the **CF_WRITE** and **CF_SECTOR** commands write to the Compact Flash card's address lines. However, these only contain 3-bits, so the commands need to ensure that the other bits of the PICmicro's PORT are not effected. This is accomplished by masking the unwanted data before transferring it to the address lines. This takes a little extra code space, and thus a little extra time to accomplish. However, there are occasions when the condition of the other bits on the PORT are not important, or when a PORT is used that only has 3-bits to it. i.e. PORTE with a 40-pin device. Issuing the **CF_ADPORT_MASK** declare and setting it FALSE, will remove the masking mnemonics, thus reducing code used and time taken.

DECLARE CF_RDYPIN PORT **.** PIN
Assigns the Compact Flash card's RDY/BSY line.

DECLARE CF_OEPIN PORT **.** PIN
Assigns the Compact Flash card's OE line.

DECLARE CF_WEPIN PORT **.** PIN
Assigns the Compact Flash card's WE line.

DECLARE CF_CD1PIN PORT **.** PIN
Assigns the Compact Flash card's CD1 line. The CD1 line is not actually used by any of the commands, but is set to input if the declare is issued in the BASIC program. The CD1 line is used to indicate whether the card is inserted into its socket.

DECLARE CF_RSTPIN PORT **.** PIN
Assigns the Compact Flash card's RESET line. The RESET line is not essential for interfacing to a Compact Flash card, but is useful if a clean power up is required. If the declare is not issued in the BASIC program, all reference to it is removed from the **CF_INIT** command. If the RESET line is not used for the card, ensure that it is tied to ground.

DECLARE CF_CE1PIN PORT **.** PIN
Assigns the Compact Flash card's CE1 line. As with the RESET line, the CE1 line is not essential for interfacing to a Compact Flash card, but is useful when multiplexing pins, as the card will ignore all commands when the CE1 line is set high. If the declare is not issued in the BASIC program, all reference to it is removed from the **CF_INIT** command. If the CE1 line is not used for the card, ensure that it is tied to ground.

DECLARE CF_READ_WRITE_INLINE = **ON** or **OFF**, or **TRUE** or **FALSE**, or 1, 0
Sometimes, speed is of the essence when accessing a Compact Flash card, especially when interfacing to the new breed of card which is 40 times faster than the normal type. Because of this, the compiler has the ability to create the code used for the **CF_WRITE** and **CF_READ** commands inline, which means it does not call its library subroutines, and can tailor itself when reading or writing **WORD**, **DWORD**, or **FLOAT** variables. However, this comes at a price of code memory, as each command is stretched out for speed, not optimisation. It also means that the inline type of commands are really only suitable for the higher speed Compact Flash cards.

If the declare is not used in the BASIC program, the default is not to use inline commands.

CRYSTAL Frequency Declare.

DECLARE XTAL 4, 8, 10, 12, 16, or 20. For 12-bit core devices.
DECLARE XTAL 3, 4, 8, 10, 12, 14, 16, 20, or 24. For 14-bit core devices.
DECLARE XTAL 3, 4, 8, 10, 12, 14, 16, 20, 24, 25, 32, 33, or 40. For 16-bit core devices.

Inform the compiler as to what frequency crystal is being used.

Some commands are very dependant on the oscillator frequency, **RSIN**, **RSOUT**, **DELAYMS**, and **DELAYUS** being just a few. In order for the compiler to adjust the correct timing for these commands, it must know what frequency crystal is being used.

The **XTAL** frequencies 3 and 14 are for 3.58MHz and 14.32MHz respectively. 14.32MHz is a 4x multiply of 3.58MHz.

If the **DECLARE** is not used in the program, then the default frequency is 4MHz.

Notes
The **DECLARE** directive usually alters the corresponding library subroutine at runtime. This means that once the **DECLARE** is added to the BASIC program, it usually cannot be UNDECLARED later, or changed in any way. However, there are some declares that alter the flow of code, and can be enabled and disabled throughout the BASIC listing.

The **DECLARE** directive is also capable of passing information to an assembly routine. For example: -

DECLARE USE_THIS_PIN PORTA , 1

Notice the use of a comma, instead of a point for separating the register and bit number. This is because it is being passed directly to the assembler as a #DEFINE directive.

DELAYMS

Syntax

DELAYMS *Length*

Overview

Delay execution for *length* x milliseconds (ms). Delays may be up to 65535ms (65.535 seconds) long.

Operators

Length can be a constant, variable, or expression.

Example

```
XTAL = 4
DIM VAR1 AS BYTE
DIM WRD1 AS WORD
VAR1 = 50
WRD1= 1000
DELAYMS 100          ' Delay for 100ms
DELAYMS VAR1         ' Delay for 50ms
DELAYMS WRD1         ' Delay for 1000ms
DELAYMS WRD1+ 10     ' Delay for 1010ms
```

Notes

DELAYMS is oscillator independent, as long as you inform the compiler of the crystal frequency to use, using the DECLARE directive.

See also : **DELAYUS, SLEEP, SNOOZE.**

DELAYUS

Syntax
DELAYUS *Length*

Overview
Delay execution for *length* x microseconds (us). Delays may be up to 65535us (65.535 milliseconds) long.

Operators
Length can be a constant, variable, or expression.

Example

```
DECLARE XTAL 20
DIM VAR1 AS BYTE
DIM WRD1 AS WORD
VAR1 = 50
WRD1= 1000
DELAYUS 1                ' Delay for 1us
DELAYUS 100              ' Delay for 100us
DELAYUS VAR1             ' Delay for 50us
DELAYUS WRD1             ' Delay for 1000us
DELAYUS WRD1+ 10         ' Delay for 1010us
```

Notes
DELAYUS is oscillator independent, as long as you inform the compiler of the crystal frequency to use, using the **XTAL** directive.

If a constant is used as *length*, then delays down to 1us can be achieved, however, if a variable is used as *length*, then there's a minimum delay time depending on the frequency of the crystal used: -

CRYSTAL FREQ	MINIMUM DELAY
4MHz	24us
8MHz	12us
10MHz	8us
16MHz	5us
20MHz	2us
24MHz	2us
25MHz	2us
32MHz	2us
33MHz	2us
40MHz	2us

See also : **DECLARE, DELAYMS, SLEEP, SNOOZE**

DEVICE

Syntax
DEVICE *Device number*

Overview
Inform the compiler which PICmicro^{tm} device is being used.

Operators
Device number can be a 12-bit, 14-bit, or 16-bit core device.

Example

```
DEVICE = 16F877          ' Produce code for a 16F877 PICmicro device
```

or

```
DEVICE = 16F84           ' Produce code for a 16F84 PICmicro device
```

or

```
DEVICE = 12C508          ' Produce code for a 12-bit core 12C508 PICmicro device
```

or

```
DEVICE = 18F452          ' Produce code for a 18F452 PICmicro device
```

DEVICE should be the first command placed in the program.

If the **DEVICE** directive is not used in the BASIC program, the code produced will default to the ever-popular (but now outdated) 16F84 device.

For an up-to-date list of compatible devices refer to the help file.

DIG

Syntax
Variable **= DIG** *Value , Digit number*

Overview
Returns the value of a decimal digit.

Operators
Value is a constant, 8-bit, 16-bit, 32-bit variable or expression, from which the *digit number* is to be extracted.
Digit number is a constant, variable, or expression, that represents the digit to extract from *value*. (0 - 4 with 0 being the rightmost digit).

Example

```
DIM VAR1 AS BYTE
DIM VAR2 AS BYTE
VAR1 = 124
VAR2 = DIG VAR1 , 1       ' Extract the second digit's value
PRINT DEC VAR2            ' Display the value, which is 2
```

DIM

Syntax
DIM *Variable* { *as* } { *Size* }

Overview
All user-defined variables must be declared using the **DIM** statement.

Operators
Variable can be any alphanumeric character or string.
as is required when the size of the variable is stated.
Size is the physical size of the variable, it may be **BIT**, **BYTE**, **WORD**, **DWORD**, **FLOAT**, or **STRING**.

Example 1

```
' Declare the variables all as BYTE sized
DIM A , B , My_VAR1 , fred , cat , zz
```

Example 1 only applies to **BYTE** sized variables, and is merely a left over from a previous version of the compiler. But is too commonly used to remove it.

Example 2

```
' Declare different sized variables
DIM VAR1 AS BYTE            ' Declare an 8-bit BYTE sized variable
DIM WRD1 AS WORD            ' Declare a 16-bit WORD sized variable
DIM DWRD1 AS DWORD          ' Declare a 32-bit DWORD sized variable
DIM BITVAR AS BIT           ' Declare a 1-bit BIT sized variable
DIM FLT AS FLOAT            ' Create a 32-bit floating point variable
DIM STRNG AS STRING*20      ‘ Create a 20 character string variable
```

Notes
Any variable that is declared without the '**AS**' text after it, will assume an 8-bit **BYTE** type.

DIM should be placed near the beginning of the program. Any references to variables not declared or before they are declared may, in some cases, produce errors.

Variable names, as in the case or labels, may freely mix numeric content and underscores.

```
DIM MyVar AS BYTE
```

or

```
DIM MY_VAR AS WORD
```

or

```
DIM My_Var2 AS BIT
```

Variable names may start with an underscore, but must NOT start with a number. They can be no more than 32 characters long. Any characters after this limit will be ignored.

DIM 2MyVar is **NOT** allowed.

Variable names are case insensitive, which means that the variable: -

```
DIM MYVAR
```

Is the same as…

```
DIM MYVAR
```

DIM can also be used to create constants i.e. numbers: -

```
DIM Num AS 100                  ' NUM now represents the value 100
DIM BigNum AS 1000              ' BIGNUM now represents 1000
DIM VeryBigNum AS 1000000       ' VERYBIGNUM now represents 1000,000
```

Constant values differ to their variable counterparts because they do not take up any RAM space. They are simply ALIAS's to numbers.

Numeric constants may contain complex equations: -

```
DIM Complex AS (( 2000 / 54 ) << 2) & 255)
```

Floating point constants may also be created using **DIM** by simply adding a decimal point to a value.

```
DIM PI AS 3.14                  ' Create a floating point constant named PI
DIM FL_NUM AS 5.0               ' Create a floating point constant holding the value 5
```

Floating point constant can also be created using expressions.

```
DIM QUANTA AS 5.0 / 1024        ' Create a floating point constant holding the result of the expression
```

DIM can also be used to create ALIAS's to other variables or constants: -

```
DIM VAR1 AS BYTE                ' Declare a BYTE sized variable
DIM VAR_BIT AS VAR1.1           ' VAR_BIT now represents Bit-1 of VAR1
```

ALIAS's, as in the case of constants, do not require any RAM space, because they point to a variable, or part of a variable that has already been declared.

RAM space required.
Each type of variable requires differing amounts of RAM memory for its allocation. The list below illustrates this.

STRING	Requires the specified length of characters + 1.
FLOAT	Requires 4 bytes of RAM.
DWORD	Requires 4 bytes of RAM.
WORD	Requires 2 bytes of RAM.
BYTE	Requires 1 byte of RAM.
BIT	Requires 1 byte of RAM for every 8 BIT variables used.

Each type of variable may hold a different minimum and maximum value.

STRING type variables are only useable with 16-bit core devices, and can hold a maximum of 255 characters.

FLOAT type variables may theoretically hold a value from -1e37 to +1e38, but because of the 32-bit architecture of the compiler, a maximum and minimum value should be thought of as -2147483646.999 to +2147483646.999 making this the most accurate of the variable family types. However, more so than **DWORD** types, this comes at a price as **FLOAT** calculations and comparisons will use more code space within the PICmicro^{tm}. Use this type of variable sparingly, and only when strictly necessary. Smaller floating point values offer more accuracy.

DWORD type variables may hold a value from -2147483648 to +2147483647 making this one of the largest of the variable family types. This comes at a price however, as **DWORD** calculations and comparisons will use more code space within the PICmicro^{tm}. Use this type of variable sparingly, and only when necessary.

WORD type variables may hold a value from 0 to 65535, which is usually large enough for most applications. It still uses more memory, but not nearly as much as a **DWORD** type.

BYTE type variables may hold a value for 0 to 255, and are the usual work horses of most programs. Code produced for **BYTE** sized variables is very low compared to **WORD**, or **DWORD** types, and should be chosen if the program requires faster, or more efficient operation.

BIT type variables may hold a 0 or a 1. These are created 8 at a time, therefore declaring a single **BIT** type variable in a program will not save RAM space, but it will save code space, as **BIT** type variables produce the most efficient use of code for comparisons etc.

There are modifiers that may also be used with variables. These are **HIGHBYTE**, **LOWBYTE**, **BYTE0**, **BYTE1**, **BYTE2**, and **BYTE3**.

BYTE2, and **BYTE3** may only be used in conjunction with a 32-bit **DWORD** type variable.

HIGHBYTE and **BYTE1** are one and the same thing, when used with a **WORD** type variable, they refer to the High byte of a **WORD** type variable: -

```
DIM WRD AS WORD                       ' Declare a WORD sized variable
DIM WRD_HI AS WRD.HIGHBYTE
' WRD_HI now represents the HIGHBYTE of variable WRD
```

Variable WRD_HI is now accessed as a **BYTE** sized type, but any reference to it actually alters the high byte of WRD.

However, if **BYTE1** is used in conjunction with a **DWORD** type variable, it will extract the second byte. **HIGHBYTE** will still extract the high byte of the variable, as will **BYTE3**.

The same is true of **LOWBYTE** and **BYTE0**, but they refer to the Low Byte of a **WORD** type variable: -

```
DIM WRD AS WORD                       ' Declare a WORD sized variable
DIM WRD_LO AS WRD.LOWBYTE
' WRD_LO now represents the LOWBYTE of variable WRD
```

Variable WRD_LO is now accessed as a **BYTE** sized type, but any reference to it actually alters the low byte of WRD.

The modifier **BYTE2** will extract the 3rd byte from a 32-bit **DWORD** type variable, as an alias. Likewise **BYTE3** will extract the high byte of a 32-bit variable.

RAM space for variables is allocated within the PICmicro^{tm} in the order that they are placed in the BASIC code. For example: -

```
DIM VAR1 AS BYTE
DIM VAR2 AS BYTE
```

Places VAR1 first, then VAR2: -

```
VAR1 EQU n
VAR2 EQU n
```

This means that on a PICmicro^{tm} with more than one BANK, the first *n* variables will always be in BANK0 (the value of *n* depends on the specific PICmicro^{tm} used).

The position of the variable within BANKs is usually of little importance if BASIC code is used, however, if assembler routines are being implemented, always assign any variables used within them first.

Problems may also arise if a **WORD,** or **DWORD** variable crosses a BANK boundary. If this happens, a warning message will be displayed in the error window. Most of the time, this will not cause any problems, however, to err on the side of caution, try and ensure that **WORD**, or **DWORD** type variables are fully inside a BANK. This is easily accomplished by placing a dummy **BYTE** variable before the offending **WORD**, or **DWORD** type variable, or relocating the offending variable within the list of DIM statements.

See Also : ALIASES, DECLARING ARRAYS, ARRAYS, CONSTANTS Floating Point Math SYMBOL, SYMBOLS, Creating and using Strings .

DISABLE

DISABLE interrupt processing that was previously ENABLED following this instruction.

DISABLE and **ENABLE**, and **RESUME** are not actually commands in the truest sense of the word, but flags that the compiler uses internally. They do not produce any code.

```
DEVICE 16F877
        OPTION_REG = %00000111
        INTCON = %00100000
        SYMBOL LED = PORTD.0
        ' Enable software interrupts, and point to interrupt handler
        ON INTERRUPT GOTO My_Int

Fin:
        DELAYMS 1
        GOTO Fin

        DISABLE                                 ' Disable interrupts in the handler
My_Int:
        TOGGLE LED                              ' Toggle an LED when interrupted
        RESUME                                  ' Return to main program
        ENABLE                                  ' Enable interrupts after the handler
```

See also : **SOFTWARE INTERRUPTS in BASIC, ENABLE, RESUME.**

DTMFOUT

Syntax
DTMFOUT *Pin* , { *OnTime* } , { *OffTime*, } **[** *Tone* {, *Tone*…} **]**

Overview
Produce a DTMF Touch Tone sequence on *Pin.*

Operators
Pin is a PORT.BIT constant that specifies the I/O pin to use. This pin will be set to output during generation of tones and set to input after the command is finished.
OnTime is an optional variable, constant, or expression (0 - 65535) specifying the duration, in ms, of the tone. If the *OnTime* parameter is not used, then the default time is 200ms
OffTime is an optional variable, constant, or expression (0 - 65535) specifying the length of silent delay, in ms, after a tone (or between tones, if multiple tones are specified). If the *OffTime* parameter is not used, then the default time is 50ms
Tone may be a variable, constant, or expression (0 - 15) specifying the DTMF tone to generate. Tones 0 through 11 correspond to the standard layout of the telephone keypad, while 12 through 15 are the fourth-column tones used by phone test equipment and in some radio applications.

Example

```
DTMFOUT PORTA.0 , [ 7 , 4 , 9 , 9 , 9 , 0 ]              ' Call Crownhill.
```

If the PICmicro^{tm} was connected to the phone line correctly, the above command would dial 666-709. If you wanted to slow down the dialling in order to break through a noisy phone line or radio link, you could use the optional *OnTime* and *OffTime* values: -

```
'Set the OnTime to 500ms and OffTime to 100ms
DTMFOUT PORTA.0 , 500 , 100 , [ 7 , 4 , 9 , 9 , 9 , 0 ] ' Call Crownhill Slowly.
```

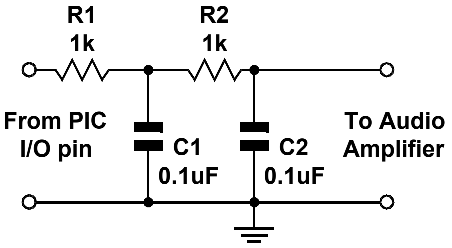

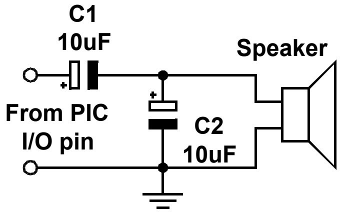

Notes DTMF tones are used to dial a telephone, or remotely control pieces of radio equipment. The PICmicro^{tm} can generate these tones digitally using the **DTMFOUT** command. However, to achieve the best quality tones, a higher crystal frequency is required. A 4MHz type will work but the quality of the sound produced will suffer. The circuits illustrate how to connect a speaker or audio amplifier to hear the tones produced.

The PICmicro^{tm} is a digital device, however, DTMF tones are analogue waveforms, consisting of a mixture of two sine waves at different audio frequencies. So how can a digital device generate an analogue output? The PICmicro^{tm} creates and mixes two sine waves mathematically, then uses the resulting stream of numbers to control the duty cycle of an extremely fast pulse-width modulation (PWM) routine. Therefore, what's actually being produced from the I/O pin is a rapid stream of pulses. The purpose of the filtering arrangements illustrated above is to smooth out the high-frequency PWM, leaving behind only the lower frequency audio. You should keep this in mind if you wish to interface the PICmicro's DTMF output to radios and other equipment that could be adversely affected by the presence of high-frequency noise on the input. Make sure to filter the DTMF output scrupulously. The circuits above are only a foundation; you may want to use an active low-pass filter with a cut-off frequency of approximately 2KHz.

EDATA

Syntax
EDATA *Constant1* { ,...*Constantn* etc }

Overview
Places constants or strings directly into the on-board eeprom memory of compatible PICmicro's

Operators
Constant1*,*Constantn are values that will be stored in the on-board eeprom. When using an **EDATA** statement, all the values specified will be placed in the eeprom starting at location 0. The **EDATA** statement does not allow you to specify an eeprom address other than the beginning location at 0. To specify a location to write or read data from the eeprom other than 0 refer to the **EREAD**, **EWRITE** commands.

Example

```
' Stores the values 1000,20,255,15, and the ASCII values for
' H','e','l','l','o' in the eeprom starting at memory position 0.

EDATA 1000 , 20 , $FF , %00001111 , "Hello"
```

Notes
16-bit, 32-bit and floating point values may also be placed into eeprom memory. These are placed LSB first (LOWEST SIGNIFICANT BYTE). For example, if 1000 is placed into an **EDATA** statement, then the order is: -

```
EDATA 1000
```

In eeprom it looks like 232, 03

Alias's to constants may also be used in an **EDATA** statement: -

```
SYMBOL Alias = 200

EDATA Alias , 120 , 254 , "Hello World"
```

Addressing an EDATA table.

Eeprom data starts at address 0 and works up towards the maximum amount that the PICmicro^{tm} will allow. However, it is rarely the case that the information stored in eeprom memory is one continuous piece of data. Eeprom memory is normally used for storage of several values or strings of text, so a method of accessing each piece of data is essential. Consider the following piece of code: -

```
EDATA "HELLO"
EDATA "WORLD"
```

Now we know that eeprom memory starts at 0, so the text "HELLO" must be located at address 0, and we also know that the text "HELLO" is built from 5 characters with each character occupying a byte of eeprom memory, so the text "WORLD" must start at address 5 and also contains 5 characters, so the next available piece of eeprom memory is located at address 10. To access the two separate text strings we would need to keep a record of the start and end address's of each character placed in the tables.

Counting the amount of eeprom memory used by each piece of data is acceptable if only a few **EDATA** tables are used in the program, but it can become tedious if multiple values and strings are needing to be stored, and can lead to program glitches if the count is wrong.

Placing an identifying name before the **EDATA** table will allow the compiler to do the byte counting for you. The compiler will store the eeprom address associated with the table in the identifying name as a constant value. For example: -

```
        HELLO_TEXT        EDATA "HELLO"
        WORLD_TEXT        EDATA "WORLD"
```

The name HELLO_TEXT is now recognised as a constant with the value of 0, referring to address 0 that the text string "HELLO" starts at. The WORLD_TEXT is a constant holding the value 5, which refers to the address that the text string "WORLD" starts at.

Note that the identifying text MUST be located on the same line as the **EDATA** directive or a syntax error will be produced. It must also NOT contain a postfix colon as does a line label or it will be treat as a line label. Think of it as an alias name to a constant.

Any **EDATA** directives MUST be placed at the head of the BASIC program as is done with SYMBOLS, so that the name is recognised by the rest of the program as it is parsed. There is no need to jump over **EDATA** directives as you have to with **LDATA** or **CDATA**, because they do not occupy code memory, but reside in high *DATA* memory.

The example program below illustrates the use of eeprom addressing.

```
' Display two text strings held in eeprom memory

        INCLUDE "PROTON_4.INC"       ' Demo on a PROTON development board
        DIM CHAR AS BYTE             ' Holds the character read from eeprom
        DIM CHARPOS AS BYTE          ' Holds the address within eeprom memory

' Create a string of text in eeprom memory. NULL terminated
HELLO    EDATA "HELLO ",0
' Create another string of text in eeprom memory. NULL terminated
WORLD  EDATA "WORLD",0
        DELAYMS 200                  ' Wait for the PICmicro to stabilise
        CLS                          ' Clear the LCD
        CHARPOS = HELLO              ' Point CHARPOS to the start of text "HELLO"
        GOSUB DISPLAY_TEXT           ' Display the text "HELLO"
        CHARPOS = WORLD              ' Point CHARPOS to the start of text "WORLD"
        GOSUB DISPLAY_TEXT           ' Display the text "WORLD"
        STOP                         ' We're all done

' Subroutine to read and display the text held at the address in CHARPOS
DISPLAY_TEXT:
        WHILE 1 = 1                  ' Create an infinite loop
        CHAR = EREAD CHARPOS         ' Read the eeprom data
        IF CHAR = 0 THEN BREAK       ' Exit when NULL found
        PRINT CHAR                   ' Display the character
        INC CHARPOS                  ' Move up to the next address
        WEND                         ' Close the loop
        RETURN                       ' Exit the subroutine
```

Formatting an EDATA table.

Sometimes it is necessary to create a data table with a known format for its values. For example all values will occupy 4 bytes of data space even though the value itself would only occupy 1 or 2 bytes.

```
EDATA 100000 , 10000 , 1000 , 100 , 10 , 1
```

The above line of code would produce an uneven data space usage, as each value requires a different amount of data space to hold the values. 100000 would require 4 bytes of eeprom space, 10000 and 1000 would require 2 bytes, but 100, 10, and 1 would only require 1 byte.

Reading these values using **EREAD** would cause problems because there is no way of knowing the amount of bytes to read in order to increment to the next valid value.

The answer is to use formatters to ensure that a value occupies a predetermined amount of bytes.

These are: -

BYTE
WORD
DWORD
FLOAT

Placing one of these formatters before the value in question will force a given length.

```
EDATA       DWORD 100000 , DWORD 10000 ,_
            DWORD 1000 , DWORD 100 , DWORD 10 , DWORD 1
```

BYTE will force the value to occupy one byte of eeprom space, regardless of it's value. Any values above 255 will be truncated to the least significant byte.

WORD will force the value to occupy 2 bytes of eeprom space, regardless of its value. Any values above 65535 will be truncated to the two least significant bytes. Any value below 255 will be padded to bring the memory count to 2 bytes.

DWORD will force the value to occupy 4 bytes of eeprom space, regardless of its value. Any value below 65535 will be padded to bring the memory count to 4 bytes. The line of code shown above uses the **DWORD** formatter to ensure all the values in the **EDATA** table occupy 4 bytes of eeprom space.

FLOAT will force a value to its floating point equivalent, which always takes up 4 bytes of eeprom space.

If all the values in an **EDATA** table are required to occupy the same amount of bytes, then a single formatter will ensure that this happens.

```
EDATA AS DWORD 100000 , 10000 , 1000 , 100 , 10 , 1
```

The above line has the same effect as the formatter previous example using separate **DWORD** formatters, in that all values will occupy 4 bytes, regardless of their value. All four formatters can be used with the **AS** keyword.

The example below illustrates the formatters in use.

```
' Convert a DWORD value into a string array
' Using only BASIC commands
' Similar principle to the STR$ command

        INCLUDE "PROTON_4.INC"
        DIM P10 AS DWORD                    ' Power of 10 variable
        DIM CNT AS BYTE
        DIM J AS BYTE

        DIM VALUE AS DWORD                  ' Value to convert
        DIM STRING1[11] AS BYTE             ' Holds the converted value
        DIM PTR AS BYTE                     ' Pointer within the Byte array

        DELAYMS 500                         ' Wait for PICmicro to stabilise
        CLS                                 ' Clear the LCD
        CLEAR                               ' Clear all RAM before we start
        VALUE = 1234576                     ' Value to convert
        GOSUB DWORD_TO_STR                  ' Convert VALUE to string
        PRINT STR STRING1                   ' Display the result
        STOP
'------------------------------------------------------------
' Convert a DWORD value into a string array
' Value to convert is placed in 'VALUE'
' Byte array 'STRING1' is built up with the ASCII equivalent

DWORD_TO_STR:
        PTR = 0
        J = 0
        REPEAT
        P10 = EREAD J * 4
        CNT = 0

        WHILE VALUE >= P10
        VALUE = VALUE - P10
        INC CNT
        WEND
        IF CNT <> 0 THEN
        STRING1[PTR] = CNT + "0"
        INC PTR
        ENDIF
        INC J
        UNTIL J > 8
        STRING1[PTR] = VALUE + "0"
        INC PTR
        STRING1[PTR] = 0                    ' Add the NULL to terminate the string
        RETURN

' EDATA table is formatted for all 32 bit values.
' Which means each value will require 4 bytes of eeprom space
EDATA AS DWORD 1000000000, 100000000, 10000000, 1000000,100000, 10000, 1000,_
                100, 10
```

Label names as pointers in an EDATA table.

If a label's name is used in the list of values in an **EDATA** table, the labels address will be used. This is useful for accessing other tables of data using their address from a lookup table. See example below.

```
' Display text from two CDATA tables
' Based on their address located in a separate table

        INCLUDE "PROTON_4.INC"              ' Use a 14-bit core device

        DIM ADDRESS AS WORD
        DIM DATA_BYTE AS BYTE

        DELAYMS 200                         ' Wait for PICmicro to stabilise
        CLS                                 ' Clear the LCD
        ADDRESS = EREAD 0                   ' Locate the address of the first string
        While 1 = 1                         ' Create an infinite loop

        DATA_BYTE = CREAD ADDRESS           ' Read each character from the CDATA string
        IF DATA_BYTE = 0 THEN EXIT_LOOP     ' Exit if NULL found
        PRINT DATA_BYTE                     ' Display the character
        INC ADDRESS                         ' Next character
        WEND                                ' Close the loop
EXIT_LOOP:

        CURSOR 2,1                          ' Point to line 2 of the LCD
        ADDRESS = EREAD 2                   ' Locate the address of the second string
        While 1 = 1                         ' Create an infinite loop
        DATA_BYTE = CREAD ADDRESS           ' Read each character from the CDATA string
        IF DATA_BYTE = 0 THEN EXIT_LOOP2  ' Exit if NULL found
        PRINT DATA_BYTE                      ' Display the character

        INC ADDRESS                         ' Next character
        WEND                                ' Close the loop
EXIT_LOOP2:
        STOP

' Table of address's located in eeprom memory
                EDATA AS WORD STRING1, STRING2
STRING1:
                CDATA "HELLO",0
STRING2:
                CDATA "WORLD",0
```

See also : **EREAD, EWRITE.**

ENABLE

ENABLE interrupt processing that was previously **DISABLED** following this instruction.

DISABLE and **ENABLE**, and **RESUME** are not actually commands in the truest sense of the word, but flags that the compiler uses internally. They do not produce any code.

```
        DEVICE 16F877
        OPTION_REG = %00000111
        INTCON = %00100000
        SYMBOL LED = PORTD.0
        ' Enable software interrupts, and point to interrupt handler
        ON INTERRUPT GOTO My_Int

Fin:
        DELAYMS 1
        GOTO Fin

        DISABLE                         ' Disable interrupts in the handler
My_Int:
        TOGGLE LED                      ' Toggle an LED when interrupted
        RESUME                          ' Return to main program
        ENABLE                          ' Enable interrupts after the handler
```

See also : **SOFTWARE INTERRUPTS in BASIC, DISABLE, RESUME.**

Software Interrupts in BASIC

Although the most efficient method of using an interrupt is in assembler, hardware interrupts and BASIC are poor bedfellows. By far the easiest way to write an interrupt handler is to write it in BASIC, in combination with the **ON INTERRUPT** statement. This is not the same as the compiler's **ON_INTERRUPT** statement, which initiates a HARDWARE interrupt. **ON INTERRUPT** (two separate words.. ***ON INTERRUPT***) informs the compiler to activate its internal interrupt handling and to jump to the BASIC interrupt handler as soon as it's capable, after receiving an interrupt. However, there's no such thing as a free lunch, and there are some penalties to pay for the ease of use that this method brings.

The statement **ON_HARDWARE_INTERRUPT** are also recognised by the compiler in order to clarify which type of interrupt is being implemented.

When **ON INTERRUPT** is used, the compiler simply flags that the interrupt has happened and immediately goes back to what it was doing, before it was rudely interrupted. Unlike a hardware interrupt, it does not immediately jump to the interrupt handler. And since the compiler's commands are non re-entrant, there could be a considerable delay before the interrupt is actually handled.

For example, if the program has just started to execute a **DELAYMS** 2000 command when an interrupt occurs, the compiler will flag the interrupt and continue with the delay. It could be as much as 2 seconds later before the interrupt handler is executed. Any time critical routines dependant on the interrupt occurring regularly will be ruined. For example, multiplexing seven segment display.

To minimise the above problem, use only statements that don't take long to execute. For example, instead of **DELAYMS** 2000, use **DELAYMS** 1 in a **FOR..NEXT**, or **REPEAT..UNTIL** loop. This will allow the compiler to complete each command more quickly and handle any awaiting interrupts: -

```
FOR VAR1 = 0 TO 199 : DELAYMS 1 : NEXT  ' Delay for 200ms
```

If interrupt processing needs to occur more regularly, then there is no choice but to use a hardware interrupt, with all it's quirks.

Exactly what happens when **ON INTERRUPT** is used is this: A short interrupt handler is placed at location 4 in the PICmicro^{tm}. This interrupt handler is simply a **RETURN**. What this does is send the program back to what it was doing before the interrupt occurred. It does not require any processor context saving. What it doesn't do is re-enable Global Interrupts as happens when using a **RETFIE** instruction.

A Call to a short subroutine is placed before each command in the BASIC program once an **ON INTERRUPT** statement is encountered. This short subroutine checks the state of the Global Interrupt Enable bit (GIE). If it's off, an interrupt is awaiting so it vectors to the users interrupt handler. Which is essentially a BASIC subroutine.

If it is still set, the program continues with the next BASIC statement, after which, the GIE bit is checked again, and so forth.

See also : ENABLE, DISABLE, RESUME.

END

Syntax
END

Overview
The **END** statement stops compilation of source, and creates an infinite loop.

Notes
END stops the PICmicro^{tm} processing by placing it into a continuous loop. The port pins remain the same and the device is placed in low power mode.

See also : STOP, SLEEP, SNOOZE.

EREAD

Syntax
Variable **= EREAD** *Address*

Overview
Read information from the on-board eeprom available on some PICmicro^{tm} types.

Operators
Variable is a user defined variable.
Address is a constant, variable, or expression, that contains the address of interest within eeprom memory.

Example

```
DEVICE 16F84                       ' A PICmicro with on-board eeprom
DIM VAR1 AS BYTE
DIM WRD1 AS WORD
DIM DWRD1 AS DWORD

EDATA 10 , 354 , 123456789         ' Place some data into the eeprom
VAR1 = EREAD 0                     ' Read the 8-bit value from address 0
WRD1= EREAD 1                      ' Read the 16-bit value from address 1
DWRD1 = EREAD 3                    ' Read the 32-bit value from address 3
```

Notes
If a **FLOAT**, or **DWORD** type variable is used as the assignment variable, then 4-bytes will be read from the eeprom. Similarly, if a **WORD** type variable is used as the assignment variable, then a 16-bit value (2-bytes)will be read from eeprom, and if a **BYTE** type variable is used, then 8-bits will be read. To read an 8-bit value while using a **WORD** sized variable, use the **LOWBYTE** modifier: -

```
WRD1.LOWBYTE = EREAD 0    ' Read an 8-bit value
WRD1.HIGHBYTE = 0         ' Clear the high byte of WRD
```

If a 16-bit (**WORD**) size value is read from the eeprom, the address must be incremented by two for the next read. Also, if a **FLOAT** or **DWORD** type variable is read, then the address must be incremented by 4.

Most of the Flash PICmicro^{tm} types have a portion of memory set aside for storage of information. The amount of memory is specific to the individual PICmicro^{tm} type, some, such as the 16F84, has 64 bytes, the 16F877 device has 256 bytes, and some of the 16-bit core devices have upwards of 512 bytes.

Eeprom memory is non-volatile, and is an excellent place for storage of long-term information, or tables of values.

Reading data with the **EREAD** command is almost instantaneous, but writing data to the eeprom can take up to 10ms per byte.

See also : EDATA, EWRITE

EWRITE

Syntax

EWRITE *Address* , **[** *Variable* {, *Variable*…etc } **]**

Overview

Write information to the on-board eeprom available on some PICmicro^{tm} types.

Operators

Address is a constant, variable, or expression, that contains the address of interest within eeprom memory.

Variable is a user defined variable.

Example

```
DEVICE 16F628                         ' A PICmicro with on-board eeprom
DIM VAR1 AS BYTE
DIM WRD1 AS WORD
DIM ADDRESS AS BYTE
VAR1 = 200
WRD1= 2456
ADDRESS = 0                           ' Point to address 0 within the eeprom
EWRITE ADDRESS , [ WRD , VAR1 ]       ' Write a 16-bit then an 8-bit value
```

Notes

If a **DWORD** type variable is used, then a 32-bit value (4-bytes) will be written to the eeprom. Similarly, if a **WORD** type variable is used, then a 16-bit value (2-bytes) will be written to eeprom, and if a **BYTE** type variable is used, then 8-bits will be written. To write an 8-bit value while using a **WORD** sized variable, use the **LOWBYTE** modifier: -

```
EWRITE ADDRESS , [ WRD.LOWBYTE , VAR1 ]
```

If a 16-bit (**WORD**) size value is written to the eeprom, the address must be incremented by two before the next write: -

```
FOR ADDRESS = 0 TO 64 STEP 2
EWRITE ADDRESS , [ WRD ]
NEXT
```

Most of the Flash PICmicro^{tm} types have a portion of memory set aside for storage of information. The amount of memory is specific to the individual PICmicro^{tm} type, some, such as the 16F84, has 64 bytes, while the newer 16F877, and 18FXXX devices have 256 bytes.

Eeprom memory is non-volatile, and is an excellent place for storage of long-term information, or tables of values.

Writing data with the **EWRITE** command can take up to 10ms per byte, but reading data from the eeprom is almost instantaneous,.

See also : EDATA, EREAD

FOR...NEXT...STEP

Syntax
FOR *Variable* **=** *Startcount* **TO** *Endcount* **[STEP** { *Stepval* } **]**
{*code body*}
NEXT

Overview
The **FOR…NEXT** loop is used to execute a statement, or series of statements a predetermined amount of times.

Operators
Variable refers to an index variable used for the sake of the loop. This index variable can itself be used in the code body but beware of altering its value within the loop as this can cause many problems.
Startcount is the start number of the loop, which will initially be assigned to the *variable*. This does not have to be an actual number - it could be the contents of another variable.
Endcount is the number on which the loop will finish. This does not have to be an actual number, it could be the contents of another variable, or an expression.
Stepval is an optional constant or variable by which the *variable* increases or decreases with each trip through the FOR-NEXT loop. If *startcount* is larger than *endcount*, then a minus sign must precede *stepval*.

Example 1

```
' Display in decimal, all the values of WRD within an upward loop
DIM WRD AS WORD

FOR WRD = 0 TO 2000 STEP 2          ' Perform an upward loop
PRINT DEC WRD ," "                  ' Display the value of WRD
NEXT                                ' Close the loop
```

Example 2

```
' Display in decimal, all the values of WRD within a downward loop
DIM WRD AS WORD

FOR WRD = 2000 TO 0 STEP -2         ' Perform a downward loop
PRINT DEC WRD ," "                  ' Display the value of WRD
NEXT                                ' Close the loop
```

Example 3

```
' Display in decimal, all the values of DWRD within a downward loop
DIM DWRD AS DWORD

FOR DWRD = 200000 TO 0 STEP -200 ' Perform a downward loop
PRINT DEC DWRD ,"        "          ' Display the value of DWRD
NEXT                                ' Close the loop
```

Example 4

' Display all the values of WRD1 using a expressions as parts of the FOR-NEXT construct

```
        DIM WRD1 AS WORD
        DIM WRD2 AS WORD

        WRD2 = 1000

        FOR WRD1= WRD2 + 10 TO WRD2 +1000     ' Perform a loop
        PRINT DEC WRD1," "                    ' Display the value of WRD1
        NEXT                                  ' Close the loop
```

Notes

You may have noticed from the above examples, that no variable is present after the **NEXT** command. A variable after **NEXT** is purely optional.

FOR-**NEXT** loops may be nested as deeply as the memory on the PICmicro^{tm} will allow. To break out of a loop you may use the **GOTO** command without any ill effects: -

```
        FOR VAR1 = 0 TO 20                    ‘ Create a loop of 21
        IF VAR1 = 10 THEN GOTO BREAK_OUT      ‘ Break out of loop when VAR1 is 10
        NEXT                                  ‘ Close the loop

BREAK_OUT:
        STOP
```

See also : **WHILE...WEND, REPEAT...UNTIL.**

FREQOUT

Syntax

FREQOUT *Pin* , *Period* , *Freq1* { , *Freq2*}

Overview

Generate one or two sine-wave tones, of differing or the same frequencies, for a specified period.

Operators

Pin is a PORT-BIT combination that specifies which I/O pin to use.
Period may be a variable, constant, or expression (0 - 65535) specifying the amount of time to generate the tone(s).
Freq1 may be a variable, constant, or expression (0 - 32767) specifying frequency of the first tone.
Freq2 may be a variable, constant, or expression (0 - 32767) specifying frequency of the second tone. When specified, two frequencies will be mixed together on the same I/O pin.

Example

```
' Generate a 2500Hz (2.5KHz) tone for 1 second (1000 ms) on bit 0 of PORTA.
FREQOUT PORTA.0 , 1000 , 2500

' Play two tones at once for 1000ms. One at 2.5KHz, the other at 3KHz.
FREQOUT PORTA.0 , 1000 , 2500 , 30000
```

Notes

FREQOUT generates one or two sine waves using a pulse-width modulation algorithm. **FREQOUT** will work with a 4MHz crystal, however, it is best used with higher frequency crystals, and operates best with a 20MHz type. The raw output from **FREQOUT** requires filtering, to eliminate most of the switching noise. The circuits shown below will filter the signal in order to play the tones through a speaker or audio amplifier.

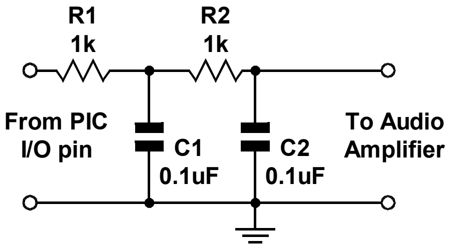

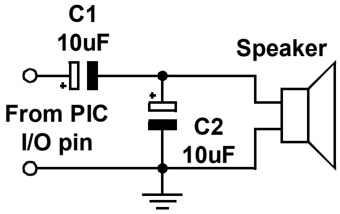

The two circuits shown above, work by filtering out the high-frequency PWM used to generate the sine waves. **FREQOUT** works over a very wide range of frequencies (0 to 32767KHz) so at the upper end of its range, the PWM filters will also filter out most of the desired frequency. You may need to reduce the values of the parallel capacitors shown in the circuit, or to create an active filter for your application.

Example 2

‘ Play a tune using FREQOUT to generate the notes

```
DEVICE 16F877
DECLARE XTAL 20
DIM Loop AS BYTE             ' Counter for notes.
DIM Freq1 AS WORD            ' Frequency1.
DIM Freq2 AS WORD            ' Frequency2
SYMBOL C = 2092              ' C note
SYMBOL D = 2348              ' D note
SYMBOL E = 2636              ' E note
SYMBOL G = 3136              ' G note
SYMBOL R = 0                 ' Silent pause.
SYMBOL Pin = PORTA.0         ' Sound output pin
ADCON1 = 7                   ' Set PORTA and PORTE to all digital
Loop = 0
REPEAT                       ' Create a loop for 29 notes within the LOOKUPL table.
Freq1 = LOOKUPL Loop , [E,D,C,D,E,E,E,R,D,D,D,R,E,G,G,R,E,D,C,D,E,E,E,E,D,D,E,D,C]
IF Freq1 = 0 THEN Freq2 = 0 : ELSE Freq2 = Freq1 - 8
FREQOUT Pin , 225 , Freq1 , Freq2
INC Loop
UNTIL Loop > 28
STOP
```

See also : DTMFOUT, SOUND, SOUND2.

GETBIT

Syntax
Variable **= GETBIT** *Variable* , *Index*

Overview
Examine a bit of a variable, or register.

Operators
Variable is a user defined variable, of type **BYTE**, **WORD**, or **DWORD**.
Index is a constant, variable, or expression that points to the bit within *Variable* that requires examining.

Example

```
        ' Examine and display each bit of variable EX_VAR
        DEVICE = 16F877
        XTAL = 4
        DIM EX_VAR AS BYTE
        DIM INDEX AS BYTE
        DIM VAR1 AS BYTE

        EX_VAR = %10110111
AGAIN:
        CLS
        PRINT AT 1,1,BIN8 EX_VAR         ' Display the original variable
        CURSOR 2,1                       ' Position the cursor at line 2
        FOR INDEX = 7 TO 0 STEP -1       ' Create a loop for 8 bits
        VAR1 = GETBIT EX_VAR,INDEX       ' Examine each bit of EX_VAR
        PRINT DEC1 VAR1                  ' Display the binary result
        DELAYMS 100                      ' Slow things down to see what's happening
        NEXT                             ' Close the loop
        GOTO AGAIN                       ' Do it forever
```

See also : **CLEARBIT, LOADBIT, SETBIT.**

GOSUB

Syntax
GOSUB *Label*

or

GOSUB *Label* **[***Variable***,** {*Variable*, *Variable*... etc}**] ,** *Receipt Variable*

Overview
GOSUB jumps the program to a defined label and continues execution from there. Once the program hits a **RETURN** command the program returns to the instruction following the **GOSUB** that called it and continues execution from that point.

If using a 16-bit core device, parameters can be pushed onto a software stack before the call is made, and a variable can be popped from the stack before continuing execution of the next commands.

Operators
Label is a user-defined label placed at the beginning of a line which must have a colon '**:**' directly after it.
Variable is a user defined variable of type **BIT**, **BYTE**, **BYTE_ARRAY**, **WORD**, **WORD_ARRAY**, **DWORD**, **FLOAT**, or **STRING**, or **constant** value, that will be pushed onto the stack before the call to a subroutine is performed.
Receipt Variable is a user defined variable of type **BIT**, **BYTE**, **BYTE_ARRAY**, **WORD**, **WORD_ARRAY**, **DWORD**, **FLOAT**, or **STRING**, that will hold a value popped from the stack after the subroutine has returned.

Example 1

```
' Implement a standard subroutine call
        GOTO Start                ' Jump over the subroutines
SubA: { subroutine A code
        ……
        ……
        }
        RETURN

SubB: { subroutine B code
        ……
        ……
        }
        RETURN

        ' Actual start of the main program
Start:  GOSUB SubA
        GOSUB SubB
        STOP
```

Example 2

```
' Call a subroutine with parameters
        DEVICE = 18F452                ' Stack only suitable for 16-bit core devices
        STACK_SIZE = 20                ' Create a small stack capable of holding 20 bytes

        DIM WRD1 as WORD               ' Create a WORD variable
        DIM WRD2 as WORD               ' Create another WORD variable
        DIM RECEIPT as WORD            ' Create a variable to hold result

        WRD1 = 1234                    ' Load the WORD variable with a value
        WRD2 = 567                     ' Load the other WORD variable with a value
        ' Call the subroutine and return a value
        GOSUB ADD_THEM [WRD1 , WRD2] , RECEIPT
        PRINT DEC RECEIPT              ' Display the result as decimal
        STOP

' Subroutine starts here. Add the two parameters passed and return the result
ADD_THEM:
        DIM ADD_WRD1 as WORD                   ' Create two uniquely named variables
        DIM ADD_WRD2 as WORD

        POP ADD_WRD2                           ' Pop the last variable pushed
        POP ADD_WRD1                           ' Pop the first variable pushed
        ADD_WRD1 = ADD_WRD1 + ADD_WRD2         ' Add the values together
        RETURN ADD_WRD1                        ' Return the result of the addition
```

In reality, what's happening with the **GOSUB** in the above program is simple, if we break it into its constituent events: -

```
        PUSH WRD1
        PUSH WRD2
        GOSUB ADD_THEM
        POP RECEIPT
```

Notes

Only one parameter can be returned from the subroutine, any others will be ignored.

If a parameter is to be returned from a subroutine but no parameters passed to the subroutine, simply issue a pair of empty square braces: -

```
        GOSUB LABEL [ ] , RECEIPT
```

The same rules apply for the parameters as they do for **PUSH**, which is after all, what is happening.

PROTON+ allows any amount of **GOSUB**s in a program, but the 14-bit PICmicro^{tm} architecture only has an 8-level return address stack, which only allows 8 **GOSUB**s to be nested. The compiler only ever uses a maximum of 4-levels for it's library subroutines, therefore do not use more than 4 **GOSUB**s within subroutines. The 16-bit core devices however, have a 28-level return address stack which allows any combination of up to 28 **GOSUBS** to occur.

A subroutine must always end with a **RETURN** command.

What is a STACK?

All microprocessors and most microcontrollers have access to a STACK, which is an area of RAM allocated for temporary data storage. But this is sadly lacking on a PICmicro^{tm} device. However, the 16-bit core devices have an architecture and low-level mnemonics that allow a STACK to be created and used very efficiently.

A stack is first created in high memory by issuing the **STACK_SIZE Declare**.

STACK_SIZE = 40

The above line of code will reserve 40 bytes at the top of RAM that cannot be touched by any BASIC command, other than **PUSH** and **POP**. This means that it is a safe place for temporary variable storage.

Taking the above line of code as an example, we can examine what happens when a variable is pushed on to the 40 byte stack, and then popped off again.

First the RAM is allocated. For this explanation we will assume that a 18F452 PICmicro^{tm} device is being used. The 18F452 has 1536 bytes of RAM that stretches linearly from address 0 to 1535. Reserving a stack of 40 bytes will reduce the top of memory so that the compiler will only see 1495 bytes (1535 - 40). This will ensure that it will not inadvertently try and use it for normal variable storage.

Pushing.

When a **WORD** variable is pushed onto the stack, the memory map would look like the diagram below: -

Top of Memory	................Empty RAM............................	Address 1535
	~ ~	
	~ ~	
	................Empty RAM............................	Address 1502
	................Empty RAM............................	Address 1501
	Low Byte address of WORD variable	Address 1496
Start of Stack	High Byte address of WORD variable	Address 1495

The high byte of the variable is first pushed on to the stack, then the low byte. And as you can see, the stack grows in an upward direction whenever a **PUSH** is implemented, which means it shrinks back down whenever a **POP** is implemented.

If we were to **PUSH** a **DWORD** variable on to the stack as well as the **WORD** variable, the stack memory would look like: -

Top of Memory	................Empty RAM............................	Address 1535
	~ ~	
	~ ~	
	................Empty RAM............................	Address 1502
	................Empty RAM............................	Address 1501
	Low Byte address of DWORD variable	Address 1500
	Mid1 Byte address of DWORD variable	Address 1499
	Mid2 Byte address of DWORD variable	Address 1498
	High Byte address of DWORD variable	Address 1497
	Low Byte address of WORD variable	Address 1496
Start of Stack	High Byte address of WORD variable	Address 1495

Popping.
When using the **POP** command, the same variable type that was pushed last must be popped first, or the stack will become out of phase and any variables that are subsequently popped will contain invalid data. For example, using the above analogy, we need to **POP** a **DWORD** variable first. The **DWORD** variable will be popped Low Byte first, then MID1 Byte, then MID2 Byte, then lastly the High Byte. This will ensure that the same value pushed will be reconstructed correctly when placed into its recipient variable. After the **POP**, the stack memory map will look like: -

```
Top of Memory   |................Empty RAM.............................| Address 1535
                ~                                                       ~
                ~                                                       ~
                |................Empty RAM.............................| Address 1502
                |................Empty RAM.............................| Address 1501
                |  Low Byte address of WORD variable   | Address 1496
Start of Stack  |  High Byte address of WORD variable  | Address 1495
```

If a **WORD** variable was then popped, the stack will be empty, however, what if we popped a **BYTE** variable instead? the stack would contain the remnants of the **WORD** variable previously pushed. Now what if we popped a **DWORD** variable instead of the required **WORD** variable? the stack would underflow by two bytes and corrupt any variables using those address's . The compiler cannot warn you of this occurring, so it is up to you, the programmer, to ensure that proper stack management is carried out. The same is true if the stack overflows. i.e. goes beyond the top of RAM. The compiler cannot give a warning.

Technical Details of Stack implementation.
The stack implemented by the compiler is known as an ***Incrementing Last-In First-Out*** Stack. *Incrementing* because it grows upwards in memory. *Last-In First-Out* because the last variable pushed, will be the first variable popped.

The stack is not circular in operation, so that a stack overflow will rollover into the PICmicro's hardware register, and an underflow will simply overwrite RAM immediately below the Start of Stack memory. If a circular operating stack is required, it will need to be coded in the main BASIC program, by examination and manipulation of the stack pointer (see below).

Indirect register pair FSR2L and FSR2H are used as a 16-bit stack pointer, and are incremented for every **BYTE** pushed, and decremented for every **BYTE** popped. Therefore checking the FSR2 registers in the BASIC program will give an indication of the stack's condition if required. This also means that the BASIC program cannot use the FSR2 register pair as part of its code, unless for manipulating the stack. Note that none of the compiler's commands, other than **PUSH** and **POP**, use FSR2.

Whenever a variable is popped from the stack, the stack's memory is not actually cleared, only the stack pointer is moved. Therefore, the above diagrams are not quite true when they show empty RAM, but unless you have use of the remnants of the variable, it should be considered as empty, and will be overwritten by the next **PUSH** command.

See also : **CALL, GOTO, PUSH, POP.**

GOTO

Syntax
GOTO *Label*

Overview
Jump to a defined label and continue execution from there.

Operators
Label is a user-defined label placed at the beginning of a line which must have a colon '**:**' directly after it.

Example

```
        IF VAR1 = 3 THEN GOTO Jumpover
        {
        code here executed only if VAR1<>3
        ……
        ……
        }
Jumpover:
        {continue code execution}
```

In this example, if VAR1=3 then the program jumps over all the code below it until it reaches the *label* JUMPOVER where program execution continues as normal.

See also : CALL, GOSUB.

HBSTART

Syntax
HBSTART

Overview
Send a **START** condition to the I^{2}C bus using the PICmicro's MSSP module.

Notes
Because of the subtleties involved in interfacing to some I^{2}C devices, the compiler's standard HBUSIN, and HBUSOUT commands were found lacking. Therefore, individual pieces of the I^{2}C protocol may be used in association with the new structure of HBUSIN, and HBUSOUT. See relevant sections for more information.

Example

```
' Interface to a 24LC32 serial eeprom
DEVICE = 16F877                  ' Use a device with an MSSP module
DIM Loop AS BYTE
DIM Array[10] AS BYTE
' Transmit bytes to the I2C bus
HBSTART                          ' Send a START condition
HBUSOUT %10100000                ' Target an eeprom, and send a WRITE command
HBUSOUT 0                        ' Send the HIGHBYTE of the address
HBUSOUT 0                        ' Send the LOWBYTE of the address
FOR LOOP = 48 TO 57              ' Create a loop containing ASCII 0 to 9
HBUSOUT LOOP                     ' Send the value of LOOP to the eeprom
NEXT                             ' Close the loop
HBSTOP                           ' Send a STOP condition
DELAYMS 10                       ' Wait for the data to be entered into eeprom matrix
' Receive bytes from the I2C bus
HBSTART                          ' Send a START condition
HBUSOUT %10100000                ' Target an eeprom, and send a WRITE command
HBUSOUT 0                        ' Send the HIGHBYTE of the address
HBUSOUT 0                        ' Send the LOWBYTE of the address
HBRESTART                        ' Send a RESTART condition
HBUSOUT %10100001                ' Target an eeprom, and send a READ command
FOR Loop = 0 TO 9                ' Create a loop
Array[Loop] = HBUSIN             ' Load an array with bytes received
IF Loop = 9 THEN HBSTOP : ELSE HBUSACK        ' ACK or STOP ?
NEXT                             ' Close the loop
PRINT AT 1,1, STR Array          ' Display the Array as a STRING
```

See also : **HBUSACK, HBRESTART, HBSTOP, HBUSIN, HBUSOUT.**

HBSTOP

Syntax
HBSTOP

Overview
Send a **STOP** condition to the I^2C bus using the PICmicro's MSSP module.

HBRESTART

Syntax
HBRESTART

Overview
Send a **RESTART** condition to the I^2C bus using the PICmicro's MSSP module.

HBUSACK

Syntax
HBUSACK

Overview
Send an **ACKNOWLEDGE** condition to the I^2C bus using the PICmicro's MSSP module.

See also : HBSTART, HBRESTART, HBSTOP, HBUSIN, HBUSOUT.

HBUSIN

Syntax
Variable = **HBUSIN** *Control* , { *Address* }

or

Variable = **HBUSIN**

or

HBUSIN *Control* , { *Address* }, **[** *Variable* {, *Variable*…} **]**

or

HBUSIN *Variable*

Overview
Receives a value from the I^{2}C bus using the MSSP module, and places it into *variable/s*. If structures TWO or FOUR (see above) are used, then NO ACKNOWLEDGE, or STOP is sent after the data. Structures ONE and THREE first send the *control* and optional *address* out of the clock pin (*SCL*), and data pin (*SDA*).

Operators
Variable is a user defined variable or constant.
Control may be a constant value or a **BYTE** sized variable expression.
Address may be a constant value or a variable expression.

The four variations of the **HBUSIN** command may be used in the same BASIC program. The SECOND and FOURTH types are useful for simply receiving a single byte from the bus, and must be used in conjunction with one of the low level commands. i.e. HBSTART, HBRESTART, HBUSACK, or HBSTOP. The FIRST, and THIRD types may be used to receive several values and designate each to a separate variable, or variable type.

The **HBUSIN** command operates as an I^{2}C master, using the PICmicro's MSSP module, and may be used to interface with any device that complies with the 2-wire I^{2}C protocol.

The most significant 7-bits of *control* byte contain the control code and the slave address of the device being interfaced with. Bit-0 is the flag that indicates whether a read or write command is being implemented.

For example, if we were interfacing to an external eeprom such as the 24C32, the control code would be %10100001 or $A1. The most significant 4-bits (1010) are the eeprom's unique slave address. Bits 2 to 3 reflect the three address pins of the eeprom. And bit-0 is set to signify that we wish to read from the eeprom. Note that this bit is automatically set by the **HBUSIN** command, regardless of its initial setting.

Example

' Receive a byte from the I^{2}C bus and place it into variable VAR1.

```
DIM VAR1 AS BYTE                    ' We'll only read 8-bits
DIM ADDRESS AS WORD                         ' 16-bit address required
SYMBOL Control %10100001            ' Target an eeprom
ADDRESS = 20                        ' Read the value at address 20
VAR1 = HBUSIN Control , Address     ' Read the byte from the eeprom
```

or

```
HBUSIN Control , ADDRESS, [ VAR1 ]  ' Read the byte from the eeprom
```

Address, is an optional parameter that may be an 8-bit or 16-bit value. If a variable is used in this position, the size of *address* is dictated by the size of the variable used (**BYTE** or **WORD**). In the case of the previous eeprom interfacing, the 24C32 eeprom requires a 16-bit address. While the smaller types require an 8-bit address. Make sure you assign the right size address for the device interfaced with, or you may not achieve the results you intended.

The value received from the bus depends on the size of the variables used, except for variation three, which only receives a **BYTE** (8-bits). For example: -

```
DIM WRD AS WORD                             ' Declare a WORD size variable
WRD = HBUSIN Control , Address
```

Will receive a 16-bit value from the bus. While: -

```
DIM VAR1 AS BYTE                            ' Declare a BYTE size variable
VAR1 = HBUSIN Control , Address
```

Will receive an 8-bit value from the bus.

Using the THIRD variation of the **HBUSIN** command allows differing variable assignments. For example: -

```
DIM VAR1 AS BYTE
DIM WRD AS WORD
HBUSIN Control , Address , [ VAR1 , WRD ]
```

Will receive two values from the bus, the first being an 8-bit value dictated by the size of variable VAR1 which has been declared as a byte. And a 16-bit value, this time dictated by the size of the variable WRD which has been declared as a word. Of course, **BIT** type variables may also be used, but in most cases these are not of any practical use as they still take up a byte within the eeprom.

The SECOND and FOURTH variations allow all the subtleties of the I^{2}C protocol to be exploited, as each operation may be broken down into its constituent parts. It is advisable to refer to the datasheet of the device being interfaced to fully understand its requirements. See section on HBSTART, HBRESTART, HBUSACK, or HBSTOP, for example code.

HBUSIN Declare

DECLARE HBUS_BITRATE Constant 100, 400, 1000

The standard speed for the I^2C bus is 100KHz. Some devices use a higher bus speed of 400KHz. The above DECLARE allows the I^2C bus speed to be increased or decreased. Use this DECLARE with caution, as too high a bit rate may exceed the device's specs, which will result in intermittent transactions, or in some cases, no transactions at all. The datasheet for the device used will inform you of its bus speed. The default bit rate is the standard 100KHz.

Notes

Not all PICmicro^{tm} devices contain an MSSP module, some only contain an SSP type, which only allows I^2C SLAVE operations. These types of devices may not be used with any of the HBUS commands. Therefore, always read and understand the datasheet for the PICmicro^{tm} device used.

When the **HBUSIN** command is used, the appropriate SDA and SCL Port and Pin are automatically setup as inputs. The SDA, and SCL lines are predetermined as hardware pins on the PICmicro^{tm} i.e. For a 16F877 device, the SCL pin is PORTC.3, and SDA is PORTC.4. Therefore, there is no need to pre-declare these.

Because the I^2C protocol calls for an *open-collector* interface, pull-up resistors are required on both the SDA and SCL lines. Values of 4.7KΩ to 10KΩ will suffice.

STR modifier with HBUSIN

Using the **STR** modifier allows variations THREE and FOUR of the **HBUSIN** command to transfer the bytes received from the I^2C bus directly into a byte array. If the amount of received characters is not enough to fill the entire array, then a formatter may be placed after the array's name, which will only receive characters until the specified length is reached. An example of each is shown below: -

```
DIM Array[10] AS BYTE          ' Define an array of 10 bytes
DIM ADDRESS AS BYTE            ' Create a word sized variable

HBUSIN %10100000 , ADDRESS, [ STR Array]        ' Load data into all the array
' Load data into only the first 5 elements of the array
HBUSIN %10100000 , ADDRESS, [ STR Array\5]
HBSTART                        ' Send a START condition
HBUSOUT %10100000              ' Target an eeprom, and send a WRITE command
HBUSOUT 0                      ' Send the HIGHBYTE of the address
HBUSOUT 0                      ' Send the LOWBYTE of the address
HBRESTART                      ' Send a RESTART condition
HBUSOUT %10100001              ' Target an eeprom, and send a READ command
HBUSIN STR Array               ' Load all the array with bytes received
HBSTOP                         ' Send a STOP condition
```

An alternative ending to the above example is: -

```
HBUSIN STR Array\5             ' Load data into only the first 5 elements of the array
HBSTOP                         ' Send a STOP condition
```

See also : **HBUSACK, HBRESTART, HBSTOP, HBSTART, HBUSOUT.**

HBUSOUT

Syntax
HBUSOUT *Control* , { *Address* } , **[** *Variable* {, *Variable*…} **]**

or

HBUSOUT *Variable*

Overview
Transmit a value to the I^2C bus using the PICmicro's on-board MSSP module, by first sending the *control* and optional *address* out of the clock pin (*SCL*), and data pin (*SDA*). Or alternatively, if only one operator is included after the **HBUSOUT** command, a single value will be transmitted, along with an ACK reception.

Operators
Variable is a user defined variable or constant.
Control may be a constant value or a **BYTE** sized variable expression.
Address may be a constant, variable, or expression.

The **HBUSOUT** command operates as an I^2C master and may be used to interface with any device that complies with the 2-wire I^2C protocol.

The most significant 7-bits of *control* byte contain the control code and the slave address of the device being interfaced with. Bit-0 is the flag that indicates whether a read or write command is being implemented.

For example, if we were interfacing to an external eeprom such as the 24C32, the control code would be %10100000 or $A0. The most significant 4-bits (1010) are the eeprom's unique slave address. Bits 2 to 3 reflect the three address pins of the eeprom. And Bit-0 is clear to signify that we wish to write to the eeprom. Note that this bit is automatically cleared by the **HBUSOUT** command, regardless of its initial value.

Example

```
' Send a byte to the I2C bus.

DIM VAR1 AS BYTE                        ' We'll only read 8-bits
DIM ADDRESS AS WORD                             ' 16-bit address required
SYMBOL Control = %10100000              ' Target an eeprom
ADDRESS = 20                            ' Write to address 20
VAR1 = 200                              ' The value place into address 20
HBUSOUT Control , ADDRESS, [ VAR1 ]     ' Send the byte to the eeprom
DELAYMS 10                              ' Allow time for allocation of byte
```

Address, is an optional parameter that may be an 8-bit or 16-bit value. If a variable is used in this position, the size of *address* is dictated by the size of the variable used (**BYTE** or **WORD**). In the case of the above eeprom interfacing, the 24C32 eeprom requires a 16-bit address. While the smaller types require an 8-bit address. Make sure you assign the right size address for the device interfaced with, or you may not achieve the results you intended.

The value sent to the bus depends on the size of the variables used. For example: -

```
DIM WRD AS WORD                          ' Declare a WORD size variable
HBUSOUT Control , Address , [ WRD ]
```

Will send a 16-bit value to the bus. While: -

```
DIM VAR1 AS BYTE                         ' Declare a BYTE size variable
HBUSOUT Control , Address , [ VAR1 ]
```

Will send an 8-bit value to the bus.

Using more than one variable within the brackets allows differing variable sizes to be sent. For example: -

```
DIM VAR1 AS BYTE
DIM WRD AS WORD
HBUSOUT Control , Address , [ VAR1 , WRD ]
```

Will send two values to the bus, the first being an 8-bit value dictated by the size of variable VAR1 which has been declared as a byte. And a 16-bit value, this time dictated by the size of the variable WRD which has been declared as a word. Of course, **BIT** type variables may also be used, but in most cases these are not of any practical use as they still take up a byte within the eeprom.

A string of characters can also be transmitted, by enclosing them in quotes: -

```
HBUSOUT Control , Address , [ "Hello World" , VAR1 , WRD ]
```

Using the second variation of the **HBUSOUT** command, necessitates using the low level commands i.e. **HBSTART**, **HBRESTART**, **HBUSACK**, or **HBSTOP**.

Using the **HBUSOUT** command with only one value after it, sends a byte of data to the I^{2}C bus, and returns holding the ACKNOWLEDGE reception. This acknowledge indicates whether the data has been received by the slave device.

The ACK reception is returned in the PICmicro's CARRY flag, which is STATUS.0, and also SYSTEM variable PP4.0. A value of zero indicates that the data was received correctly, while a one indicates that the data was not received, or that the slave device has sent a NACK return. You must read and understand the datasheet for the device being interfacing to, before the ACK return can be used successfully. An code snippet is shown below: -

```
' Transmit a byte to a 24LC32 serial eeprom
DIM PP4 AS BYTE SYSTEM
HBSTART                         ' Send a START condition
HBUSOUT %10100000               ' Target an eeprom, and send a WRITE command
HBUSOUT 0                       ' Send the HIGHBYTE of the address
HBUSOUT 0                       ' Send the LOWBYTE of the address
HBUSOUT "A"                     ' Send the value 65 to the bus
IF PP4.0 = 1 THEN GOTO Not_Received          ' Has ACK been received OK ?
HBSTOP                          ' Send a STOP condition
DELAYMS 10                      ' Wait for the data to be entered into eeprom matrix
```

STR modifier with HBUSOUT.

The **STR** modifier is used for transmitting a string of bytes from a byte array variable. A string is a set of bytes sized values that are arranged or accessed in a certain order. The values 1, 2, 3 would be stored in a string with the value 1 first, followed by 2 then followed by the value 3. A byte array is a similar concept to a string; it contains data that is arranged in a certain order. Each of the elements in an array is the same size. The string 1,2,3 would be stored in a byte array containing three bytes (elements).

Below is an example that sends four bytes from an array: -

```
DIM MYARRAY[10] AS BYTE      ' Create a 10-byte array.
MYARRAY [0] = "A"            ' Load the first 4 bytes of the array
MYARRAY [1] = "B"            ' With the data to send
MYARRAY [2] = "C"
MYARRAY [3] = "D"
HBUSOUT %10100000 , Address , [ STR MYARRAY \4 ]      ' Send 4-byte string.
```

Note that we use the optional \n argument of **STR**. If we didn't specify this, the program would try to keep sending characters until all 10 bytes of the array were transmitted. Since we do not wish all 10 bytes to be transmitted, we chose to tell it explicitly to only send the first 4 bytes.

The above example may also be written as: -

```
DIM MYARRAY [10] AS BYTE     ' Create a 10-byte array.
STR MYARRAY = "ABCD"         ' Load the first 4 bytes of the array
HBSTART                      ' Send a START condition
HBUSOUT %10100000            ' Target an eeprom, and send a WRITE command
HBUSOUT 0                    ' Send the HIGHBYTE of the address
HBUSOUT 0                    ' Send the LOWBYTE of the address
HBUSOUT STR MYARRAY \4       ' Send 4-byte string.
HBSTOP                       ' Send a STOP condition
```

The above example, has exactly the same function as the previous one. The only differences are that the string is now constructed using the **STR** as a command instead of a modifier, and the low-level HBUS commands have been used.

Notes

Not all PICmicro^{tm} devices contain an MSSP module, some only contain an SSP type, which only allows I^{2}C SLAVE operations. These types of devices may not be used with any of the HBUS commands. Therefore, always read and understand the datasheet for the PICmicro^{tm} device used.

When the **HBUSOUT** command is used, the appropriate SDA and SCL Port and Pin are automatically setup as inputs. The SDA, and SCL lines are predetermined as hardware pins on the PICmicro^{tm} i.e. For a 16F877 device, the SCL pin is PORTC.3, and SDA is PORTC.4. Therefore, there is no need to pre-declare these. Because the I^{2}C protocol calls for an *open-collector* interface, pull-up resistors are required on both the SDA and SCL lines. Values of 4.7K to 10K will suffice.

See also : **HBUSACK, HBRESTART, HBSTOP, HBUSIN, HBSTART.**

HIGH

Syntax
HIGH *Port* or *Port.Bit*

Overview
Place a Port or bit in a high state. For a Port, this means filling it with 1's. For a bit this means setting it to 1.

Operators
Port can be any valid port.
Port.Bit can be any valid port and bit combination, i.e. PORTA.1

Example

```
SYMBOL LED = PORTB.4
HIGH LED
```

See also : CLEAR, DIM, LOW, SET, SYMBOL.

HPWM

Syntax

HPWM *Channel* , *Dutycycle* , *Frequency*

Overview

Output a pulse width modulated pulse train using the CCP modules PWM hardware, available on some PICmicros. The PWM pulses produced can run continuously in the background while the program is executing other instructions.

Operators

Channel is a constant value that specifies which hardware PWM channel to use. Some devices have 1, 2 or 3 PWM channels. On devices with 2 channels, the Frequency must be the same on both channels. It must be noted, that this is a limitation of the PICmicro^{tm} not the compiler. The data sheet for the particular device used shows the fixed hardware pin for each Channel. For example, for a PIC16F877, Channel 1 is CCP1 which is pin PORTC.2. Channel 2 is CCP2 which is pin PORTC.1.
Dutycycle is a variable, constant (0-255), or expression that specifies the on/off (high/low) ratio of the signal. It ranges from 0 to 255, where 0 is off (low all the time) and 255 is on (high) all the time. A value of 127 gives a 50% duty cycle (square wave).
Frequency is a variable, constant (0-32767), or expression that specifies the desired frequency of the PWM signal. Not all frequencies are available at all oscillator settings. The highest frequency at any oscillator speed is 32767Hz. The lowest usable **HPWM** *Frequency* at each oscillator setting is shown in the table below: -

XTAL frequency	**Lowest useable PWM frequency**
4MHz	**145Hz**
8MHz	**489Hz**
10MHz	**611Hz**
12MHz	**733Hz**
16MHz	**977Hz**
20MHz	**1221Hz**
24MHz	**1465Hz**
33MHz	**2015Hz**
40MHz	**2442Hz**

Example

```
DEVICE = 16F877
        XTAL = 20
        HPWM 1,127,1000          ' Send a 50% duty cycle PWM signal at 1KHz
        DELAYMS 500
        HPWM 1,64,2000           ' Send a 25% duty cycle PWM signal at 2KHz
        STOP
```

Notes

Some devices, such as the PIC16F62x, and PIC18F4xx, have alternate pins that may be used for **HPWM**. The following **DECLARES** allow the use of different pins: -

```
DECLARE CCP1_PIN PORT . PIN        ' Select HPWM port and bit for CCP1 module.
DECLARE CCP2_PIN PORT . PIN        ' Select HPWM port and bit for CCP2 module.
```

See also : **PWM, PULSOUT, SERVO.**

HRSIN

Syntax
Variable = **HRSIN** , **{** *Timeout* , *Timeout Label* **}**

or

HRSIN { *Timeout* , *Timeout Label* **}** , **{** *Parity Error Label* **}** , *Modifiers* , *Variable* {, *Variable...* }

Overview
Receive one or more values from the serial port on devices that contain a hardware USART.

Operators
Timeout is an OPTIONAL value for the length of time the **HRSIN** command will wait before jumping to label ***TIMEOUT LABEL***. ***Timeout*** is specified in 1 millisecond units.
Timeout Label is an OPTIONAL valid BASIC label where **HRSIN** will jump to in the event that a character has not been received within the time specified by ***TIMEOUT***.
Parity Error Label is an OPTIONAL valid BASIC label where **HRSIN** will jump to in the event that a PARITY error is received. Parity is set using **DECLARES**. Parity Error detecting is not supported in the inline version of **HRSIN** (first syntax example above).
Modifier is one of the many formatting modifiers, explained below.
Variable is a **BIT**, **BYTE**, **WORD**, or **DWORD** variable, that will be loaded by **HRSIN**.

Example

```
' Receive values serially and timeout if no reception after 1 second (1000ms).
        DEVICE 16F877
        XTAL = 4

        HSERIAL_BAUD = 9600                 ' Set baud rate to 9600
        HSERIAL_RCSTA = %10010000           ' Enable serial port and continuous receive
        HSERIAL_TXSTA = %00100000           ' Enable transmit and asynchronous mode
        HSERIAL_CLEAR = ON                  ' Optionally clear the buffer before receiving

        DIM VAR1 AS BYTE

Loop:   VAR1 = HRSIN , {1000 , Timeout}     ' Receive a byte serially into VAR1
        PRINT DEC VAR1 , " "                ' Display the byte received
        GOTO Loop                           ' Loop forever
Timeout:
        CLS
        PRINT "TIMED OUT"                   ' Display an error if HRSIN timed out
        STOP
```

HRSIN MODIFIERS.

As we already know, **RSIN** will wait for and receive a single byte of data, and store it in a variable . If the PICmicro^{tm} were connected to a PC running a terminal program and the user pressed the "A" key on the keyboard, after the **HRSIN** command executed, the variable would contain 65, which is the ASCII code for the letter "A"

What would happen if the user pressed the "1" key? The result would be that the variable would contain the value 49 (the ASCII code for the character "1"). This is an important point to remember: every time you press a character on the keyboard, the computer receives the ASCII value of that character. It is up to the receiving side to interpret the values as necessary.

In this case, perhaps we actually wanted the variable to end up with the value 1, rather than the ASCII code 49.

The **HRSIN** command provides a modifier, called the decimal modifier, which will interpret this for us. Look at the following code: -

```
DIM SERDATA AS BYTE
HRSIN DEC SERDATA
```

Notice the decimal modifier in the **HRSIN** command that appears just to the left of the SERDATA variable. This tells **HRSIN** to convert incoming text representing decimal numbers into true decimal form and store the result in SERDATA. If the user running the terminal software pressed the "1", "2" and then "3" keys followed by a space or other non-numeric text, the value 123 will be stored in the variable SERDATA, allowing the rest of the program to perform any numeric operation on the variable.

Without the decimal modifier, however, you would have been forced to receive each character ("1", "2" and "3") separately, and then would still have to do some manual conversion to arrive at the number 123 (one hundred twenty three) before you can do the desired calculations on it.

The decimal modifier is designed to seek out text that represents decimal numbers. The characters that represent decimal numbers are the characters "0" through "9". Once the **HRSIN** command is asked to use the decimal modifier for a particular variable, it monitors the incoming serial data, looking for the first decimal character. Once it finds the first decimal character, it will continue looking for more (accumulating the entire multi-digit number) until is finds a non-decimal numeric character. Remember that it will not finish until it finds at least one decimal character followed by at least one non-decimal character.

To illustrate this further, examine the following examples (assuming we're using the same code example as above): -

Serial input: "ABC"
Result: The program halts at the **HRSIN** command, continuously waiting for decimal text.

Serial input: "123" (with no characters following it)
Result: The program halts at the **HRSIN** command. It recognises the characters "1", "2" and "3" as the number one hundred twenty three, but since no characters follow the "3", it waits continuously, since there's no way to tell whether 123 is the entire number or not.

Serial input: "123" (followed by a space character)
Result: Similar to the above example, except once the space character is received, the program knows the entire number is 123, and stores this value in SERDATA. The **HRSIN** command then ends, allowing the next line of code to run.

Serial input: "123A"
Result: Same as the example above. The "A" character, just like the space character, is the first non-decimal text after the number 123, indicating to the program that it has received the entire number.

Serial input: "ABCD123EFGH"
Result: Similar to examples 3 and 4 above. The characters "ABCD" are ignored (since they're not decimal text), the characters "123" are evaluated to be the number 123 and the following character, "E", indicates to the program that it has received the entire number.

The final result of the **DEC** modifier is limited to 16 bits (up to the value 65535). If a value larger than this is received by the decimal modifier, the end result will be incorrect because the result rolled-over the maximum 16-bit value. Therefore, **HRSIN** modifiers may not (at this time) be used to load **DWORD** (32-bit) variables.

The decimal modifier is only one of a family of conversion modifiers available with **HRSIN** See below for a list of available conversion modifiers. All of the conversion modifiers work similar to the decimal modifier (as described above). The modifiers receive bytes of data, waiting for the first byte that falls within the range of characters they accept (e.g., "0" or "1" for binary, "0" to "9" for decimal, "0" to "9" and "A" to "F" for hex. Once they receive a numeric character, they keep accepting input until a non-numeric character arrives, or in the case of the fixed length modifiers, the maximum specified number of digits arrives.

While very effective at filtering and converting input text, the modifiers aren't completely foolproof. As mentioned before, many conversion modifiers will keep accepting text until the first non-numeric text arrives, even if the resulting value exceeds the size of the variable. After **HRSIN**, a **BYTE** variable will contain the lowest 8 bits of the value entered and a **WORD** (16-bits) would contain the lowest 16 bits. You can control this to some degree by using a modifier that specifies the number of digits, such as **DEC2**, which would accept values only in the range of 0 to 99.

Conversion Modifier	**Type of Number Numeric**	**Characters Accepted**
DEC{1..10}	Decimal, optionally limited to 1 - 10 digits	0 through 9
HEX{1..8}	Hexadecimal, optionally limited to 1 - 8 digits	0 through 9, A through F
BIN{1..32}	Binary, optionally limited to 1 - 32 digits	0, 1

A variable preceded by **BIN** will receive the ASCII representation of its binary value.
For example, if **BIN** VAR1 is specified and "1000" is received, VAR1 will be set to 8.

A variable preceded by **DEC** will receive the ASCII representation of its decimal value.
For example, if **DEC** VAR1 is specified and "123" is received, VAR1 will be set to 123.

A variable preceded by **HEX** will receive the ASCII representation of its hexadecimal value.
For example, if **HEX** VAR1 is specified and "FE" is received, VAR1 will be set to 254.

SKIP followed by a count will skip that many characters in the input stream.
For example, **SKIP** 4 will skip 4 characters.

The **HRSIN** command can be configured to wait for a specified sequence of characters before it retrieves any additional input. For example, suppose a device attached to the PICmicro^{tm} is known to send many different sequences of data, but the only data you wish to observe happens to appear right after the unique characters, "XYZ". A modifier named **WAIT** can be used for this purpose: -

```
HRSIN WAIT( "XYZ" ) , SERDATA
```

The above code waits for the characters "X", "Y" and "Z" to be received, in that order, then it receives the next data byte and places it into variable SERDATA.

STR modifier.
The **HRSIN** command also has a modifier for handling a string of characters, named **STR**.

The **STR** modifier is used for receiving a string of characters into a byte array variable.

A string is a set of characters that are arranged or accessed in a certain order. The characters "ABC" would be stored in a string with the "A" first, followed by the "B" then followed by the "C". A byte array is a similar concept to a string; it contains data that is arranged in a certain order. Each of the elements in an array is the same size. The string "ABC" would be stored in a byte array containing three bytes (elements).

Below is an example that receives ten bytes and stores them in the 10-byte array, SERSTRING: -

```
DIM SerString[10] AS BYTE             ' Create a 10-byte array.
HRSIN STR SerString                   ' Fill the array with received data.
PRINT STR SerString                   ' Display the string.
```

If the amount of received characters is not enough to fill the entire array, then a formatter may be placed after the array's name, which will only receive characters until the specified length is reached. For example: -

```
DIM SerString[10] AS BYTE             ' Create a 10-byte array.
HRSIN STR SerString\5                 ' Fill the first 5-bytes of the array
PRINT STR SerString\5                 ' Display the 5-character string.
```

The example above illustrates how to fill only the first *n* bytes of an array, and then how to display only the first *n* bytes of the array. *n* refers to the value placed after the backslash.

Because of its complexity, serial communication can be rather difficult to work with at times. Using the guidelines below when developing a project using the **HRSIN** and **HRSOUT** commands may help to eliminate some obvious errors: -

Always build your project in steps.
Start with small, manageable pieces of code, (that deal with serial communication) and test them, one individually.
Add more and more small pieces, testing them each time, as you go.
Never write a large portion of code that works with serial communication without testing its smallest workable pieces first.

Pay attention to timing.
Be careful to calculate and overestimate the amount of time, operations should take within the PICmicro^{tm} for a given oscillator frequency. Misunderstanding the timing constraints is the source of most problems with code that communicate serially. If the serial communication in your project is bi-directional, the above statement is even more critical.

Pay attention to wiring.
Take extra time to study and verify serial communication wiring diagrams. A mistake in wiring can cause strange problems in communication, or no communication at all. Make sure to connect the ground pins (Vss) between the devices that are communicating serially.

Verify port setting on the PC and in the HRSIN / HRSOUT commands.
Unmatched settings on the sender and receiver side will cause garbled data transfers or no data transfers. This is never more critical than when a line transceiver is used(i.e. MAX232). Always remember that a line transceiver inverts the serial polarity.
If the serial data received is unreadable, it is most likely caused by a baud rate setting error, or a polarity error.

If receiving data from another device that is not a PICmicro^{tm}, try to use baud rates of 9600 and below, or alternatively, use a higher frequency crystal.

Because of additional overheads in the PICmicro^{tm}, and the fact that the **HRSIN** command only offers a 2 level receive buffer for serial communication, received data may sometimes be missed or garbled. If this occurs, try lowering the baud rate, or increasing the crystal frequency. Using simple variables (not arrays) will also increase the chance that the PICmicro^{tm} will receive the data properly.

Declares
There are five DECLARE directives for use with **HRSIN**. These are: -

DECLARE HSERIAL_BAUD Constant value
Sets the BAUD rate that will be used to receive a value serially. The baud rate is calculated using the **XTAL** frequency declared in the program. The default baud rate if the DECLARE is not included in the program listing is 2400 baud.

DECLARE HSERIAL_RCSTA Constant value (0 to 255)
HSERIAL_RCSTA, sets the respective PICmicro^{tm} hardware register RCSTA, to the value in the DECLARE. See the Microchip data sheet for the device used for more information regarding this register.

DECLARE HSERIAL_TXSTA Constant value (0 to 255)
HSERIAL_TXSTA, sets the respective PICmicro^{tm} hardware register, TXSTA, to the value in the DECLARE. See the Microchip data sheet for the device used for more information regarding this register. The TXSTA register BRGH bit (bit 2) controls the high speed mode for the baud rate generator. Certain baud rates at certain oscillator speeds require this bit to be set to operate properly. To do this, set **HSERIAL_TXSTA** to a value of 24h instead of the normal 20h. Refer to the Microchip data sheet for the hardware serial port baud rate tables and additional information.

DECLARE HSERIAL_PARITY ODD or **EVEN**
Enables/Disables parity on the serial port. For both **HRSIN** and **HRSOUT** The default serial data format is 8N1, 8 data bits, no parity bit and 1 stop bit. 7E1 (7 data bits, even parity, 1 stop bit) or 7O1 (7data bits, odd parity, 1 stop bit) may be enabled using the **HSERIAL_PARITY** declare.

DECLARE HSERIAL_PARITY = **EVEN** ' Use if even parity desired
DECLARE HSERIAL_PARITY = **ODD** ' Use if odd parity desired

DECLARE HSERIAL_CLEAR ON or **OFF**
Clear the overflow error bit before commencing a read.

Because the hardware serial port only has a 2-byte input buffer, it can easily overflow is characters are not read from it often enough. When this occurs, the USART stops accepting any new characters, and requires resetting. This overflow error can be reset by strobing the CREN bit within the RCSTA register. Example: -

```
RCSTA.4 = 0
RCSTA.4 = 1
```

or

```
CLEAR RCSTA.4
SET RCSTA.4
```

Alternatively, the **HSERIAL_CLEAR** declare can be used to automatically clear this error, even if no error occurred. However, the program will not know if an error occurred while reading, therefore some characters may be lost.

```
DECLARE HSERIAL_CLEAR = ON
```

Notes

HRSIN can only be used with devices that contain a hardware USART. See the specific device's data sheet for further information concerning the serial input pin as well as other relevant parameters.

Since the serial transmission is done in hardware, it is not possible to set the levels to an inverted state to eliminate an RS232 driver. Therefore a suitable driver should be used with **HRSIN**. Just such a circuit using a MAX232 is shown below.

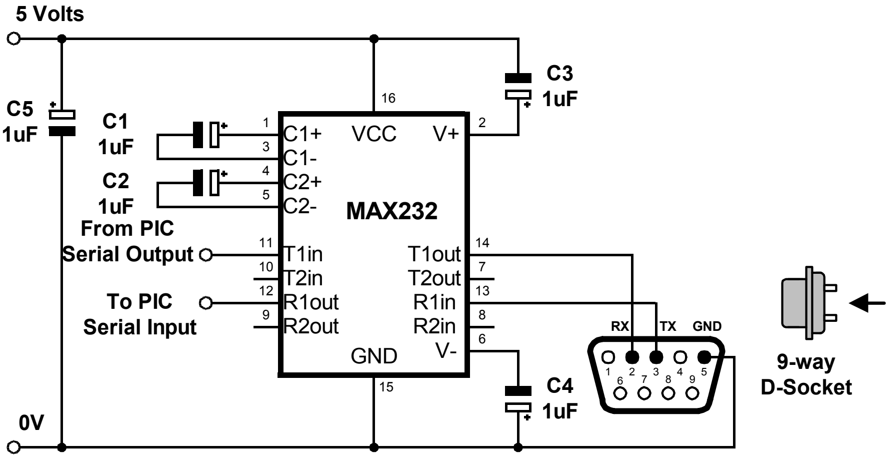
5 Volts
C5
1uF
C1
1uF
C2
1uF
C3
1uF
C4
1uF
MAX232
VCC
V+
C1+
C1-
C2+
C2-
T1in
T2in
R1out
R2out
T1out
T2out
R1in
R2in
V-
GND
16
2
1
3
4
5
11
10
12
9
14
7
13
8
6
15
From PIC
Serial Output
To PIC
Serial Input
RX
TX
GND
9-way
D-Socket
0V

A simpler, and somewhat more elegant transceiver circuit using only 5 discrete components is shown in the diagram below.

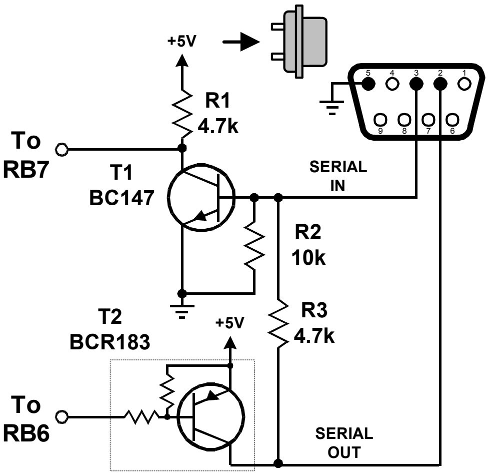
+5V
R1
4.7k
To
RB7
T1
BC147
SERIAL
IN
R2
10k
T2
BCR183
+5V
R3
4.7k
To
RB6
SERIAL
OUT

See also : DECLARE, RSIN, RSOUT, SERIN, SEROUT, HRSOUT, HSERIN, HSEROUT.

HRSOUT

Syntax
HRSOUT *Item* { , *Item...* }

Overview
Transmit one or more *Ite*ms from the hardware serial port on devices that support asynchronous serial communications in hardware.

Operators
Item may be a constant, variable, expression, string list, or inline command.
There are no operators as such, instead there are *modifiers*. For example, if an at sign'@' precedes an *Ite*m, the ASCII representation for each digit is transmitted.

The modifiers are listed below: -

Modifier	**Operation**
AT ypos,xpos	Position the cursor on a serial LCD
CLS	Clear a serial LCD (also creates a 30ms delay)
BIN{1..32}	Send binary digits
DEC{1..10}	Send decimal digits
HEX{1..8}	Send hexadecimal digits
SBIN{1..32}	Send signed binary digits
SDEC{1..10}	Send signed decimal digits
SHEX{1..8}	Send signed hexadecimal digits
IBIN{1..32}	Send binary digits with a preceding '%' identifier
IDEC{1..10}	Send decimal digits with a preceding '#' identifier
IHEX{1..8}	Send hexadecimal digits with a preceding '$' identifier
ISBIN{1..32}	Send signed binary digits with a preceding '%' identifier
ISDEC{1..10}	Send signed decimal digits with a preceding '#' identifier
ISHEX{1..8}	Send signed hexadecimal digits with a preceding '$' identifier
REP c\n	Send character c repeated n times
STR array\n	Send all or part of an array
CSTR cdata	Send string data defined in a CDATA statement.

The numbers after the **BIN**, **DEC**, and **HEX** modifiers are optional. If they are omitted, then the default is all the digits that make up the value will be displayed.

If a floating point variable is to be displayed, then the digits after the **DEC** modifier determine how many remainder digits are send. i.e. numbers after the decimal point.

```
DIM FLT AS FLOAT
FLT = 3.145
HRSOUT DEC2 FLT                ' Send 2 values after the decimal point
```

The above program will send 3.14

If the digit after the **DEC** modifier is omitted, then 3 values will be displayed after the decimal point.

```
        DIM FLT AS FLOAT
        FLT = 3.1456
        HRSOUT DEC FLT          ' Send 3 values after the decimal point
```

The above program will send 3.145

There is no need to use the **SDEC** modifier for signed floating point values, as the compiler's **DEC** modifier will automatically display a minus result: -

```
        DIM FLT AS FLOAT
        FLT = -3.1456
        HRSOUT DEC FLT          ' Send 3 values after the decimal point
```

The above program will send -3.145

HEX or **BIN** modifiers cannot be used with floating point values or variables.

The Xpos and Ypos values in the **AT** modifier both start at 1. For example, to place the text "HELLO WORLD" on line 1, position 1, the code would be: -

```
        HRSOUT AT 1 , 1 , "HELLO WORLD"
```

Example 1

```
        DIM VAR1 AS BYTE
        DIM WRD AS WORD
        DIM DWD AS DWORD

        HRSOUT "Hello World"                  ' Display the text "Hello World"
        HRSOUT "VAR1= " , DEC VAR1            ' Display the decimal value of VAR1
        HRSOUT "VAR1= " , HEX VAR1            ' Display the hexadecimal value of VAR1
        HRSOUT "VAR1= " , BIN VAR1            ' Display the binary value of VAR1
        HRSOUT "VAR1= " , @VAR1               ' Display the decimal value of VAR1
        HRSOUT "DWD= " , HEX6 DWD  ' Display 6 hex characters of a DWORD type variable
```

Example 2

```
        ' Display a negative value on a serial LCD.
        SYMBOL NEGATIVE = -200
        HRSOUT AT 1 , 1 , SDEC NEGATIVE
```

Example 3

```
        ' Display a negative value on a serial LCD with a preceding identifier.
        HRSOUT AT 1 , 1 , ISHEX -$1234
```

Example 3 will produce the text "$-1234" on the LCD.

Some PICmicros such as the 16F87x, and 18FXXX range have the ability to read and write to their own flash memory. And although writing to this memory too many times is unhealthy for the PICmicro^{tm}, reading this memory is both fast, and harmless. Which offers a unique form of data storage and retrieval, the CDATA command proves this, as it uses the mechanism of reading and storing in the PICmicro's flash memory.

Combining the unique features of the ‘self modifying PICmicro's' with a string format, the compiler is capable of reducing the overhead of printing, or transmitting large amounts of text data.

The **CSTR** modifier may be used in commands that deal with text processing i.e. **SEROUT**, **HSEROUT**, and **PRINT** etc.

The **CSTR** modifier is used in conjunction with the **CDATA** command. The **CDATA** command is used for initially creating the string of characters: -

```
STRING1: CDATA "HELLO WORLD" , 0
```

The above line of case will create, in flash memory, the values that make up the ASCII text "HELLO WORLD", at address STRING1. Note the NULL terminator after the ASCII text.

NULL terminated means that a zero (NULL) is placed at the end of the string of ASCII characters to signal that the string has finished.

To display, or transmit this string of characters, the following command structure could be used:

```
HRSOUT CSTR STRING1
```

The label that declared the address where the list of **CDATA** values resided, now becomes the string's name. In a large program with lots of text formatting, this type of structure can save quite literally hundreds of bytes of valuable code space.

Try both these small programs, and you'll see that using **CSTR** saves a few bytes of code: -

First the standard way of displaying text: -

```
DEVICE 16F877
CLS
HRSOUT "HELLO WORLD",13
HRSOUT "HOW ARE YOU?",13
HRSOUT "I AM FINE!",13
STOP
```

Now using the **CSTR** modifier: -

```
    CLS
    HRSOUT CSTR TEXT1
    HRSOUT CSTR TEXT2
    HRSOUT CSTR TEXT3
    STOP

TEXT1: CDATA "HELLO WORLD" , 13, 0
TEXT2: CDATA "HOW ARE YOU?" , 13, 0
TEXT3: CDATA "I AM FINE!" , 13, 0
```

Again, note the NULL terminators after the ASCII text in the **CDATA** commands. Without these, the PICmicro^{tm} will continue to transmit data in an endless loop.

The term 'virtual string' relates to the fact that a string formed from the **CDATA** command cannot be written too, but only read from.

The **STR** modifier is used for sending a string of bytes from a byte array variable. A string is a set of bytes sized values that are arranged or accessed in a certain order. The values 1, 2, 3 would be stored in a string with the value 1 first, followed by 2 then followed by the value 3. A byte array is a similar concept to a string; it contains data that is arranged in a certain order. Each of the elements in an array is the same size. The string 1,2,3 would be stored in a byte array containing three bytes (elements).

Below is an example that displays four bytes (from a byte array): -

```
DIM MYARRAY[10] AS BYTE          ' Create a 10-byte array.
MYARRAY [0] = "H"                ' Load the first 5 bytes of the array
MYARRAY [1] = "E"                ' With the data to send
MYARRAY [2] = "L"
MYARRAY [3] = "L"
MYARRAY [4] = "O"
HRSOUT STR MYARRAY \5            ' Display a 5-byte string.
```

Note that we use the optional \n argument of **STR**. If we didn't specify this, the PICmicro^{tm} would try to keep sending characters until all 10 bytes of the array were transmitted. Since we do not wish all 10 bytes to be transmitted, we chose to tell it explicitly to only send the first 5 bytes.

The above example may also be written as: -

```
DIM MYARRAY [10] AS BYTE         ' Create a 10-byte array.
STR MYARRAY = "HELLO"            ' Load the first 5 bytes of the array
HRSOUT STR MYARRAY \5            ' Send 5-byte string.
```

The above example, has exactly the same function as the previous one. The only difference is that the string is now constructed using **STR** as a command instead of a modifier.

Declares
There are four **DECLARE** directives for use with **HRSOUT**. These are: -

DECLARE HSERIAL_BAUD Constant value
Sets the BAUD rate that will be used to transmit a value serially. The baud rate is calculated using the **XTAL** frequency declared in the program. The default baud rate if the DECLARE is not included in the program listing is 2400 baud.

DECLARE HSERIAL_RCSTA Constant value (0 to 255)
HSERIAL_RCSTA, sets the respective PICmicro^{tm} hardware register RCSTA, to the value in the DECLARE. See the Microchip data sheet for the device used for more information regarding this register. Refer to the upgrade manual pages for a description of the RCSTA register.

DECLARE HSERIAL_TXSTA Constant value (0 to 255)
HSERIAL_TXSTA, sets the respective PICmicro^{tm} hardware register, TXSTA, to the value in the DECLARE. See the Microchip data sheet for the device used for more information regarding this register. The TXSTA register BRGH bit (bit 2) controls the high speed mode for the baud rate generator. Certain baud rates at certain oscillator speeds require this bit to be set to operate properly. To do this, set **HSERIAL_TXSTA** to a value of 24h instead of the normal 20h. Refer to the Microchip data sheet for the hardware serial port baud rate tables and additional information. Refer to the upgrade manual pages for a description of the TXSTA register.

DECLARE HSERIAL_PARITY ODD or **EVEN**

Enables/Disables parity on the serial port. For both **HRSOUT** and **HRSIN** The default serial data format is 8N1, 8 data bits, no parity bit and 1 stop bit. 7E1 (7 data bits, even parity, 1 stop bit) or 7O1 (7data bits, odd parity, 1 stop bit) may be enabled using the **HSERIAL_PARITY** declare.

```
DECLARE HSERIAL_PARITY = EVEN          ' Use if even parity desired
DECLARE HSERIAL_PARITY = ODD           ' Use if odd parity desired
```

Notes

HRSOUT can only be used with devices that contain a hardware USART. See the specific device's data sheet for further information concerning the serial input pin as well as other relevant parameters.

Since the serial transmission is done in hardware, it is not possible to set the levels to an inverted state in order to eliminate an RS232 driver. Therefore a suitable driver should be used with **HRSOUT**. See **HRSIN** for circuits.

See also : **DECLARE, RSIN, RSOUT, SERIN, SEROUT, HRSIN, HSERIN, HSEROUT.**

HSERIN

Syntax
HSERIN *Timeout* , *Timeout Label* **,** *Parity Error Label* , **[***Modifiers* , *Variable* {, *Variable...* }**]**

Overview
Receive one or more values from the serial port on devices that contain a hardware USART. (Compatible with the melabs compiler)

Operators
Timeout is an OPTIONAL value for the length of time the **HRSIN** command will wait before jumping to label ***TIMEOUT LABEL***. ***Timeout*** is specified in 1 millisecond units.
Timeout Label is an OPTIONAL valid BASIC label where **HRSIN** will jump to in the event that a character has not been received within the time specified by ***TIMEOUT***.
Parity Error Label is an OPTIONAL valid BASIC label where **HRSIN** will jump to in the event that a PARITY error is received. Parity is set using **DECLARES**. Parity Error detecting is not supported in the inline version of **HRSIN** (first syntax example above).
Modifier is one of the many formatting modifiers, explained below.
Variable is a **BIT**, **BYTE**, **WORD**, or **DWORD** variable, that will be loaded by **HSERIN**.

Example

```
' Receive values serially and timeout if no reception after 1 second (1000ms).
        DEVICE 16F877
        XTAL = 4

        HSERIAL_BAUD = 9600              ' Set baud rate to 9600
        HSERIAL_RCSTA = %10010000        ' Enable serial port and continuous receive
        HSERIAL_TXSTA = %00100000        ' Enable transmit and asynchronous mode
        HSERIAL_CLEAR = ON               ' Optionally clear the buffer before receiving

        DIM VAR1 AS BYTE

Loop:   HSERIN 1000 , Timeout , [VAR1]   ' Receive a byte serially into VAR1
        PRINT DEC VAR1 , " "             ' Display the byte received
        GOTO Loop                        ' Loop forever
Timeout:
        CLS
        PRINT "TIMED OUT"                ' Display an error if HSERIN timed out
        STOP
```

HSERIN MODIFIERS.
As we already know, **HSERIN** will wait for and receive a single byte of data, and store it in a variable . If the PICmicro^{tm} were connected to a PC running a terminal program and the user pressed the "A" key on the keyboard, after the **HSERIN** command executed, the variable would contain 65, which is the ASCII code for the letter "A"

What would happen if the user pressed the "1" key? The result would be that the variable would contain the value 49 (the ASCII code for the character "1"). This is an important point to remember: every time you press a character on the keyboard, the computer receives the ASCII value of that character. It is up to the receiving side to interpret the values as necessary. In this case, perhaps we actually wanted the variable to end up with the value 1, rather than the ASCII code 49.

The **HSERIN** command provides a modifier, called the decimal modifier, which will interpret this for us. Look at the following code: -

```
DIM SERDATA AS BYTE
HSERIN [DEC SERDATA]
```

Notice the decimal modifier in the **HSERIN** command that appears just to the left of the SERDATA variable. This tells **HSERIN** to convert incoming text representing decimal numbers into true decimal form and store the result in SERDATA. If the user running the terminal software pressed the "1", "2" and then "3" keys followed by a space or other non-numeric text, the value 123 will be stored in the variable SERDATA, allowing the rest of the program to perform any numeric operation on the variable.

Without the decimal modifier, however, you would have been forced to receive each character ("1", "2" and "3") separately, and then would still have to do some manual conversion to arrive at the number 123 (one hundred twenty three) before you can do the desired calculations on it.

The decimal modifier is designed to seek out text that represents decimal numbers. The characters that represent decimal numbers are the characters "0" through "9". Once the **HSERIN** command is asked to use the decimal modifier for a particular variable, it monitors the incoming serial data, looking for the first decimal character. Once it finds the first decimal character, it will continue looking for more (accumulating the entire multi-digit number) until is finds a non-decimal numeric character. Remember that it will not finish until it finds at least one decimal character followed by at least one non-decimal character.

To illustrate this further, examine the following examples (assuming we're using the same code example as above): -

Serial input: "ABC"
Result: The program halts at the **HSERIN** command, continuously waiting for decimal text.

Serial input: "123" (with no characters following it)
Result: The program halts at the **HSERIN** command. It recognises the characters "1", "2" and "3" as the number one hundred twenty three, but since no characters follow the "3", it waits continuously, since there's no way to tell whether 123 is the entire number or not.

Serial input: "123" (followed by a space character)
Result: Similar to the above example, except once the space character is received, the program knows the entire number is 123, and stores this value in SERDATA. The **HSERIN** command then ends, allowing the next line of code to run.

Serial input: "123A"
Result: Same as the example above. The "A" character, just like the space character, is the first non-decimal text after the number 123, indicating to the program that it has received the entire number.

Serial input: "ABCD123EFGH"
Result: Similar to examples 3 and 4 above. The characters "ABCD" are ignored (since they're not decimal text), the characters "123" are evaluated to be the number 123 and the following character, "E", indicates to the program that it has received the entire number.

The final result of the **DEC** modifier is limited to 16 bits (up to the value 65535). If a value larger than this is received by the decimal modifier, the end result will be incorrect because the result rolled-over the maximum 16-bit value. Therefore, **HSERIN** modifiers may not (at this time) be used to load **DWORD** (32-bit) variables.

The decimal modifier is only one of a family of conversion modifiers available with **HSERIN** See below for a list of available conversion modifiers. All of the conversion modifiers work similar to the decimal modifier (as described above). The modifiers receive bytes of data, waiting for the first byte that falls within the range of characters they accept (e.g., "0" or "1" for binary, "0" to "9" for decimal, "0" to "9" and "A" to "F" for hex. Once they receive a numeric character, they keep accepting input until a non-numeric character arrives, or in the case of the fixed length modifiers, the maximum specified number of digits arrives.

While very effective at filtering and converting input text, the modifiers aren't completely foolproof. As mentioned before, many conversion modifiers will keep accepting text until the first non-numeric text arrives, even if the resulting value exceeds the size of the variable. After **HSERIN,** a **BYTE** variable will contain the lowest 8 bits of the value entered and a **WORD** (16-bits) would contain the lowest 16 bits. You can control this to some degree by using a modifier that specifies the number of digits, such as **DEC2**, which would accept values only in the range of 0 to 99.

Conversion Modifier	**Type of Number Numeric**	**Characters Accepted**
DEC{1..10}	Decimal, optionally limited to 1 - 10 digits	0 through 9
HEX{1..8}	Hexadecimal, optionally limited to 1 - 8 digits	0 through 9, A through F
BIN{1..32}	Binary, optionally limited to 1 - 32 digits	0, 1

A variable preceded by **BIN** will receive the ASCII representation of its binary value.
For example, if **BIN** VAR1 is specified and "1000" is received, VAR1 will be set to 8.

A variable preceded by **DEC** will receive the ASCII representation of its decimal value.
For example, if **DEC** VAR1 is specified and "123" is received, VAR1 will be set to 123.

A variable preceded by **HEX** will receive the ASCII representation of its hexadecimal value.
For example, if **HEX** VAR1 is specified and "FE" is received, VAR1 will be set to 254.

SKIP followed by a count will skip that many characters in the input stream.
For example, **SKIP** 4 will skip 4 characters.

The **HSERIN** command can be configured to wait for a specified sequence of characters before it retrieves any additional input. For example, suppose a device attached to the PICmicro^{tm} is known to send many different sequences of data, but the only data you wish to observe happens to appear right after the unique characters, "XYZ". A modifier named **WAIT** can be used for this purpose: -

```
HSERIN [WAIT( "XYZ" ) , SERDATA]
```

The above code waits for the characters "X", "Y" and "Z" to be received, in that order, then it receives the next data byte and places it into variable SERDATA.

STR modifier.
The **HSERIN** command also has a modifier for handling a string of characters, named **STR**.

The **STR** modifier is used for receiving a string of characters into a byte array variable.

A string is a set of characters that are arranged or accessed in a certain order. The characters "ABC" would be stored in a string with the "A" first, followed by the "B" then followed by the "C". A byte array is a similar concept to a string; it contains data that is arranged in a certain order. Each of the elements in an array is the same size. The string "ABC" would be stored in a byte array containing three bytes (elements).

Below is an example that receives ten bytes and stores them in the 10-byte array, SERSTRING: -

```
DIM SerString[10] AS BYTE                    ' Create a 10-byte array.
HSERIN [STR SerString]                       ' Fill the array with received data.
PRINT STR SerString                          ' Display the string.
```

If the amount of received characters is not enough to fill the entire array, then a formatter may be placed after the array's name, which will only receive characters until the specified length is reached. For example: -

```
DIM SerString[10] AS BYTE                    ' Create a 10-byte array.
HSERIN [STR SerString\5]                     ' Fill the first 5-bytes of the array
PRINT STR SerString\5                        ' Display the 5-character string.
```

The example above illustrates how to fill only the first *n* bytes of an array, and then how to display only the first *n* bytes of the array. *n* refers to the value placed after the backslash.

Because of its complexity, serial communication can be rather difficult to work with at times. Using the guidelines below when developing a project using the **HSERIN** and HSEROUT commands may help to eliminate some obvious errors: -

Always build your project in steps.
Start with small, manageable pieces of code, (that deal with serial communication) and test them, one individually.
Add more and more small pieces, testing them each time, as you go.
Never write a large portion of code that works with serial communication without testing its smallest workable pieces first.

Pay attention to timing.
Be careful to calculate and overestimate the amount of time, operations should take within the PICmicro^{tm} for a given oscillator frequency. Misunderstanding the timing constraints is the source of most problems with code that communicate serially. If the serial communication in your project is bi-directional, the above statement is even more critical.

Pay attention to wiring.
Take extra time to study and verify serial communication wiring diagrams. A mistake in wiring can cause strange problems in communication, or no communication at all. Make sure to connect the ground pins (Vss) between the devices that are communicating serially.

Verify port setting on the PC and in the HSERIN / HSEROUT commands.
Unmatched settings on the sender and receiver side will cause garbled data transfers or no data transfers. This is never more critical than when a line transceiver is used(i.e. MAX232). Always remember that a line transceiver inverts the serial polarity.
If the serial data received is unreadable, it is most likely caused by a baud rate setting error, or a polarity error.

If receiving data from another device that is not a PICmicro^{tm}, try to use baud rates of 9600 and below, or alternatively, use a higher frequency crystal.
Because of additional overheads in the PICmicro^{tm}, and the fact that the **HSERIN** command offers a 2 level hardware receive buffer for serial communication, received data may sometimes be missed or garbled. If this occurs, try lowering the baud rate, or increasing the crystal frequency. Using simple variables (not arrays) will also increase the chance that the PICmicro^{tm} will receive the data properly.

Declares
There are five DECLARE directives for use with **HSERIN** . These are: -

DECLARE HSERIAL_BAUD Constant value
Sets the BAUD rate that will be used to receive a value serially. The baud rate is calculated using the **XTAL** frequency declared in the program. The default baud rate if the DECLARE is not included in the program listing is 2400 baud.

DECLARE HSERIAL_RCSTA Constant value (0 to 255)
HSERIAL_RCSTA, sets the respective PICmicro^{tm} hardware register RCSTA, to the value in the DECLARE. See the Microchip data sheet for the device used for more information regarding this register.

DECLARE HSERIAL_TXSTA Constant value (0 to 255)
HSERIAL_TXSTA, sets the respective PICmicro^{tm} hardware register, TXSTA, to the value in the DECLARE. See the Microchip data sheet for the device used for more information regarding this register.
The TXSTA register BRGH bit (bit 2) controls the high speed mode for the baud rate generator. Certain baud rates at certain oscillator speeds require this bit to be set to operate properly. To do this, set **HSERIAL_TXSTA** to a value of 24h instead of the normal 20h. Refer to the Microchip data sheet for the hardware serial port baud rate tables and additional information.

DECLARE HSERIAL_PARITY ODD or **EVEN**
Enables/Disables parity on the serial port. For both **HSERIN** and HRSOUT The default serial data format is 8N1, 8 data bits, no parity bit and 1 stop bit. 7E1 (7 data bits, even parity, 1 stop bit) or 7O1 (7data bits, odd parity, 1 stop bit) may be enabled using the **HSERIAL_PARITY** declare.

```
DECLARE HSERIAL_PARITY = EVEN        ' Use if even parity desired
DECLARE HSERIAL_PARITY = ODD         ' Use if odd parity desired
```

DECLARE HSERIAL_CLEAR ON or **OFF**
Clear the overflow error bit before commencing a read.

Because the hardware serial port only has a 2-byte input buffer, it can easily overflow is characters are not read from it often enough. When this occurs, the USART stops accepting any new characters, and requires resetting. This overflow error can be reset by strobing the CREN bit within the RCSTA register.

Example: -

```
RCSTA.4 = 0
RCSTA.4 = 1
```

or

```
CLEAR RCSTA.4
SET RCSTA.4
```

Alternatively, the **HSERIAL_CLEAR** declare can be used to automatically clear this error, even if no error occurred. However, the program will not know if an error occurred while reading, therefore some characters may be lost.

```
DECLARE HSERIAL_CLEAR = ON
```

Notes
HSERIN can only be used with devices that contain a hardware USART. See the specific device's data sheet for further information concerning the serial input pin as well as other relevant parameters.

Since the serial transmission is done in hardware, it is not possible to set the levels to an inverted state to eliminate an RS232 driver. Therefore a suitable driver should be used with **HSERIN** . See **HRSIN** for suitable circuits.

See also : **DECLARE, HSEROUT, HRSIN, HRSOUT, RSIN, RSOUT, SERIN, SEROUT.**

HSEROUT

Syntax
HSEROUT [*Item* { , *Item...* }**]**

Overview
Transmit one or more *Ite*ms from the hardware serial port on devices that support asynchronous serial communications in hardware.

Operators
Item may be a constant, variable, expression, string list, or inline command.
There are no operators as such, instead there are *modifiers*. For example, if an at sign'@' precedes an *Ite*m, the ASCII representation for each digit is transmitted.

The modifiers are listed below: -

Modifier	**Operation**
AT ypos,xpos	Position the cursor on a serial LCD
CLS	Clear a serial LCD (also creates a 30ms delay)
BIN{1..32}	Send binary digits
DEC{1..10}	Send decimal digits
HEX{1..8}	Send hexadecimal digits
SBIN{1..32}	Send signed binary digits
SDEC{1..10}	Send signed decimal digits
SHEX{1..8}	Send signed hexadecimal digits
IBIN{1..32}	Send binary digits with a preceding '%' identifier
IDEC{1..10}	Send decimal digits with a preceding '#' identifier
IHEX{1..8}	Send hexadecimal digits with a preceding '$' identifier
ISBIN{1..32}	Send signed binary digits with a preceding '%' identifier
ISDEC{1..10}	Send signed decimal digits with a preceding '#' identifier
ISHEX{1..8}	Send signed hexadecimal digits with a preceding '$' identifier
REP c\n	Send character c repeated n times
STR array\n	Send all or part of an array
CSTR cdata	Send string data defined in a CDATA statement.

The numbers after the **BIN**, **DEC**, and **HEX** modifiers are optional. If they are omitted, then the default is all the digits that make up the value will be displayed.

If a floating point variable is to be displayed, then the digits after the **DEC** modifier determine how many remainder digits are send. i.e. numbers after the decimal point.

```
DIM FLT AS FLOAT
FLT = 3.145
HSEROUT [DEC2 FLT]              ' Send 2 values after the decimal point
```

The above program will send 3.14

If the digit after the **DEC** modifier is omitted, then 3 values will be displayed after the decimal point.

```
DIM FLT AS FLOAT
FLT = 3.1456
HSEROUT [DEC FLT]               ' Send 3 values after the decimal point
```

The above program will send 3.145

There is no need to use the **SDEC** modifier for signed floating point values, as the compiler's **DEC** modifier will automatically display a minus result: -

```
DIM FLT AS FLOAT
FLT = -3.1456
HSEROUT [DEC FLT]               ' Send 3 values after the decimal point
```

The above program will send -3.145

HEX or **BIN** modifiers cannot be used with floating point values or variables.

The Xpos and Ypos values in the **AT** modifier both start at 1. For example, to place the text "HELLO WORLD" on line 1, position 1, the code would be: -

```
HSEROUT [AT 1 , 1 , "HELLO WORLD"]
```

Example 1

```
DIM VAR1 AS BYTE
DIM WRD AS WORD
DIM DWD AS DWORD

HSEROUT ["Hello World"             ' Display the text "Hello World"
HSEROUT ["VAR1= " , DEC VAR1]      ' Display the decimal value of VAR1
HSEROUT ["VAR1= " , HEX VAR1]      ' Display the hexadecimal value of VAR1
HSEROUT ["VAR1= " , BIN VAR1]      ' Display the binary value of VAR1
HSEROUT ["VAR1= " , @VAR1]         ' Display the decimal value of VAR1
' Display 6 hex characters of a DWORD type variable
HSEROUT ["DWD= " , HEX6 DWD]
```

Example 2

```
' Display a negative value on a serial LCD.
SYMBOL NEGATIVE = -200
HSEROUT [AT 1 , 1 , SDEC NEGATIVE]
```

Example 3

```
' Display a negative value on a serial LCD with a preceding identifier.
HSEROUT [AT 1 , 1 , ISHEX -$1234]
```

Example 3 will produce the text "$-1234" on the LCD.

Some PICmicros such as the 16F87x, and 18FXXX range have the ability to read and write to their own flash memory. And although writing to this memory too many times is unhealthy for the PICmicro^{tm}, reading this memory is both fast, and harmless.

Which offers a unique form of data storage and retrieval, the CDATA command proves this, as it uses the mechanism of reading and storing in the PICmicro's flash memory.

Combining the unique features of the ‘self modifying PICmicro's' with a string format, the compiler is capable of reducing the overhead of printing, or transmitting large amounts of text data. The **CSTR** modifier may be used in commands that deal with text processing i.e. SEROUT, HRSOUT, and PRINT etc.

The **CSTR** modifier is used in conjunction with the CDATA command. The CDATA command is used for initially creating the string of characters: -

```
STRING1: CDATA "HELLO WORLD" , 0
```

The above line of case will create, in flash memory, the values that make up the ASCII text "HELLO WORLD", at address STRING1. Note the NULL terminator after the ASCII text.

NULL terminated means that a zero (NULL) is placed at the end of the string of ASCII characters to signal that the string has finished.

To display, or transmit this string of characters, the following command structure could be used:

```
        HSEROUT [CSTR STRING1]
```

The label that declared the address where the list of CDATA values resided, now becomes the string's name. In a large program with lots of text formatting, this type of structure can save quite literally hundreds of bytes of valuable code space.

Try both these small programs, and you'll see that using **CSTR** saves a few bytes of code: -

First the standard way of displaying text: -

```
        DEVICE 16F877
        CLS
        HSEROUT ["HELLO WORLD",13]
        HSEROUT ["HOW ARE YOU?",13]
        HSEROUT ["I AM FINE!",13]
        STOP
```

Now using the **CSTR** modifier: -

```
        CLS
        HSEROUT [CSTR TEXT1]
        HSEROUT [CSTR TEXT2]
        HSEROUT [CSTR TEXT3]
        STOP

TEXT1: CDATA "HELLO WORLD" , 13, 0
TEXT2: CDATA "HOW ARE YOU?" , 13, 0
TEXT3: CDATA "I AM FINE!" , 13, 0
```

Again, note the NULL terminators after the ASCII text in the CDATA commands. Without these, the PICmicro^{tm} will continue to transmit data in an endless loop.

The term 'virtual string' relates to the fact that a string formed from the CDATA command cannot be written too, but only read from.

The **STR** modifier is used for sending a string of bytes from a byte array variable. A string is a set of bytes sized values that are arranged or accessed in a certain order. The values 1, 2, 3 would be stored in a string with the value 1 first, followed by 2 then followed by the value 3. A byte array is a similar concept to a string; it contains data that is arranged in a certain order. Each of the elements in an array is the same size. The string 1,2,3 would be stored in a byte array containing three bytes (elements).

Below is an example that displays four bytes (from a byte array): -

```
DIM MYARRAY[10] AS BYTE          ' Create a 10-byte array.
MYARRAY [0] = "H"                ' Load the first 5 bytes of the array
MYARRAY [1] = "E"                ' With the data to send
MYARRAY [2] = "L"
MYARRAY [3] = "L"
MYARRAY [4] = "O"
HRSOUT STR MYARRAY \5            ' Display a 5-byte string.
```

Note that we use the optional \n argument of **STR**. If we didn't specify this, the PICmicro^{tm} would try to keep sending characters until all 10 bytes of the array were transmitted. Since we do not wish all 10 bytes to be transmitted, we chose to tell it explicitly to only send the first 5 bytes.

The above example may also be written as: -

```
DIM MYARRAY [10] AS BYTE         ' Create a 10-byte array.
STR MYARRAY = "HELLO"            ' Load the first 5 bytes of the array
HRSOUT STR MYARRAY \5            ' Send 5-byte string.
```

The above example, has exactly the same function as the previous one. The only difference is that the string is now constructed using **STR** as a command instead of a modifier.

Declares
There are four DECLARE directives for use with **HRSOUT**. These are: -

DECLARE HSERIAL_BAUD Constant value
Sets the BAUD rate that will be used to transmit a value serially. The baud rate is calculated using the **XTAL** frequency declared in the program. The default baud rate if the DECLARE is not included in the program listing is 2400 baud.

DECLARE HSERIAL_RCSTA Constant value (0 to 255)
HSERIAL_RCSTA, sets the respective PICmicro^{tm} hardware register RCSTA, to the value in the DECLARE. See the Microchip data sheet for the device used for more information regarding this register. Refer to the upgrade manual pages for a description of the RCSTA register.

DECLARE HSERIAL_TXSTA Constant value (0 to 255)
HSERIAL_TXSTA, sets the respective PICmicro^{tm} hardware register, TXSTA, to the value in the DECLARE. See the Microchip data sheet for the device used for more information regarding this register. The TXSTA register BRGH bit (bit 2) controls the high speed mode for the baud rate generator. Certain baud rates at certain oscillator speeds require this bit to be set to operate properly. To do this, set **HSERIAL_TXSTA** to a value of 24h instead of the normal 20h.

Refer to the Microchip data sheet for the hardware serial port baud rate tables and additional information. Refer to the upgrade manual pages for a description of the TXSTA register.

DECLARE HSERIAL_PARITY ODD or **EVEN**
Enables/Disables parity on the serial port. For both **HSEROUT** and **HSERIN** The default serial data format is 8N1, 8 data bits, no parity bit and 1 stop bit. 7E1 (7 data bits, even parity, 1 stop bit) or 7O1 (7data bits, odd parity, 1 stop bit) may be enabled using the **HSERIAL_PARITY** declare.

```
DECLARE HSERIAL_PARITY = EVEN          ' Use if even parity desired
DECLARE HSERIAL_PARITY = ODD           ' Use if odd parity desired
```

Notes
HSEROUT can only be used with devices that contain a hardware USART. See the specific device's data sheet for further information concerning the serial input pin as well as other relevant parameters.

Since the serial transmission is done in hardware, it is not possible to set the levels to an inverted state in order to eliminate an RS232 driver. Therefore a suitable driver should be used with **HSEROUT** . See **HRSIN** for circuit examples

See also : **DECLARE, RSIN, RSOUT, SERIN, SEROUT, HRSIN, HSERIN.**

IF..THEN..ELSEIF..ELSE..ENDIF

Syntax
IF *Comparison* **THEN** *Instruction* **:** { *Instruction* }

Or, you can use the single line form syntax:

IF *Comparison* **THEN** *Instruction* **:** { *Instruction* } **: ELSEIF** *Comparison* **THEN** *Instruction* **: ELSE** *Instruction*

Or, you can use the block form syntax:

IF *Comparison* **THEN**
Instruction(s)
ELSEIF *Comparison* **THEN**
Instruction(s)
{
ELSEIF *Comparison* **THEN**
Instruction(s)
}
ELSE
Instruction(s)
ENDIF

The curly braces signify optional conditions.
Note that ELSEIF is only available with the PROTON+ compiler.

Overview
Evaluates the *comparison* and, if it fulfils the criteria, executes *expression.* If *comparison* is not fulfilled the *instruction* is ignored, unless an **ELSE** directive is used, in which case the code after it is implemented until the **ENDIF** is found.

When all the instruction are on the same line as the **IF**-**THEN** statement, all the instructions on the line are carried out if the condition is fulfilled.

Operators
Comparison is composed of variables, numbers and comparators.
Instruction is the statement to be executed should the *comparison* fulfil the **IF** criteria

Example 1

```
SYMBOL LED = PORTB.4
VAR1 = 3
LOW LED
IF VAR1 > 4 THEN HIGH LED : DELAYMS 500 : LOW LED
```

In the above example, VAR1 is not greater than 4 so the **IF** criteria isn't fulfilled. Consequently, the **HIGH** LED statement is never executed leaving the state of port pin PORTB.4 low. However, if we change the value of variable VAR1 to 5, then the LED will turn on for 500ms then off, because VAR1 is now greater than 4, so fulfils the *comparison* criteria.

A second form of **IF**, evaluates the expression and if it is true then the first block of instructions is executed. If it is false then the second block (after the **ELSE**) is executed.

The program continues after the **ENDIF** instruction.

The **ELSE** is optional. If it is missed out then if the expression is false the program continues after the **ENDIF** line.

Example 2

```
	IF X & 1 = 0 THEN
		A = 0
		B = 1
	ELSE
		A = 1
	ENDIF
	IF Z = 1 THEN
		A = 0
		B = 0
	ENDIF
```

Example 3

```
	IF X = 10 THEN
		HIGH LED1
	ELSEIF X = 20 THEN
		HIGH LED2
	ELSE
		HIGH LED3
	ENDIF
```

A forth form of **IF**, allows the **ELSE** or **ELSEIF** to be placed on the same line as the **IF**: -

```
	IF X = 10 THEN HIGH LED1 : ELSEIF X = 20 THEN HIGH LED2 : ELSE HIGH LED3
```

Notice that there is no **ENDIF** instruction. The comparison is automatically terminated by the end of line condition. So in the above example, if X is equal to 10 then LED1 will illuminate, if X equals 20 then LED will illuminate, otherwise, LED3 will illuminate.

The **IF** statement allows any type of variable, register or constant to be compared. A common use for this is checking a Port bit: -

```
	IF PORTA.0 = 1 THEN HIGH LED : ELSE : LOW LED
```

Any commands on the same line after **THEN** will only be executed if the comparison if fulfilled: -

```
	IF VAR1 = 1 THEN HIGH LED : DELAYMS 500 : LOW LED
```

Notes
A **GOTO** command is optional after the **THEN**: -

```
	IF PORTB.0 = 1 THEN LABEL
```

THEN operand always required.
The PROTON+ compiler relies heavily on the **THEN** part. Therefore, if the **THEN** part of a construct is left out of the code listing, a SYNTAX ERROR will be produced.

See also : **BOOLEAN LOGIC OPERATORS, SELECT..CASE..ENDSELECT.**

INCLUDE

Syntax
INCLUDE "*Filename*"

Overview
Include another file at the current point in the compilation. All the lines in the new file are compiled as if they were in the current file at the point of the **INCLUDE** directive.

A Common use for the include command is shown in the example below. Here a small master document is used to include a number of smaller library files which are all compiled together to make the overall program.

Operators
Filename is any valid PROTON+ file.

Example

```
' Main Program INCLUDES sub files
INCLUDE "STARTCODE.BAS"
INCLUDE "MAINCODE.BAS"
INCLUDE "ENDCODE.BAS"
```

Notes
The file to be included into the BASIC listing may be in one of three places on the hard drive.

1… Within the BASIC program's directory.
2… Within the Compiler's current directory.
3… Within the INC folder of the compiler's current directory.

The list above also shows the order in which they are searched for.

Using INCLUDE files to tidy up your code.
If the include file contains assembler subroutines then it must always be placed at the beginning of the program. This allows the subroutine/s to be placed within the first bank of memory (*0..2048*), thus avoiding any bank boundary errors. Placing the include file at the beginning of the program also allows all of the variables used by the routines held within it to be pre-declared. This again makes for a tidier program, as a long list of variables is not present in the main program.

There are some considerations that must be taken into account when writing code for an include file, these are: -

1). Always jump over the subroutines.

When the include file is placed at the top of the program this is the first place that the compiler starts, therefore, it will run the subroutine/s first and the **RETURN** command will be pointing to a random place within the code. To overcome this, place a **GOTO** statement just before the subroutine starts.

For example: -

```
GOTO OVER_THIS_SUBROUTINE        ' Jump over the subroutine
' The subroutine is placed here

OVER_THIS_SUBROUTINE:            ' Jump to here first
```

2). Variable and Label names should be as meaningful as possible.

For example. Instead of naming a variable **LOOP**, change it to **ISUB_LOOP**. This will help eliminate any possible duplication errors, caused by the main program trying to use the same variable or label name. However, try not to make them too obscure as your code will be harder to read and understand, it might make sense at the time of writing, but come back to it after a few weeks and it will be meaningless.

3). Comment, Comment, and Comment some more.

This cannot be emphasised enough. ALWAYS place a plethora of remarks and comments. The purpose of the subroutine/s within the include file should be clearly explained at the top of the program, also, add comments after virtually every command line, and clearly explain the purpose of all variables and constants used. This will allow the subroutine to be used many weeks or months after its conception. A rule of thumb that I use is that I can understand what is going on within the code by reading only the comments to the right of the command lines.

INC

Syntax
INC ***Variable***

Overview
Increment a variable i.e. VAR1 = VAR1 + 1

Operators
Variable is a user defined variable

Example

```
VAR1 = 1
REPEAT
PRINT DEC VAR1 , " "
DELAYMS 200
INC VAR1
UNTIL VAR1 > 10
```

The above example shows the equivalent to the FOR-NEXT loop: -

```
FOR VAR1 = 1 TO 10 : NEXT
```

See also : DEC.

INKEY

Syntax
Variable **= INKEY**

Overview
Scan a keypad and place the returned value into *variable*

Operators
Variable is a user defined variable

Example

```
DIM VAR1 AS BYTE
VAR1 = INKEY              ' Scan the keypad
DELAYMS 50                ' Debounce by waiting 50ms
PRINT DEC VAR1 , " "      ' Display the result on the LCD
```

Notes
INKEY will return a value between 0 and 16. If no key is pressed, the value returned is 16.

Using a **LOOKUP** command, the returned values can be re-arranged to correspond with the legends printed on the keypad: -

```
VAR1 = INKEY
KEY = LOOKUP VAR1, [255,1,4,7,"*",2,5,8,0,3,6,9,"#",0,0,0]
```

The above example is only a demonstration, the values inside the **LOOKUP** command will need to be re-arranged for the type of keypad used, and it's connection configuration.

Declare
DECLARE KEYPAD_PORT PORT
Assigns the Port that the keypad is attached to.

The keypad routine requires pull-up resistors, therefore, the best Port for this device is PORTB, which comes equipped with internal pull-ups. If the DECLARE is not used in the program, then PORTB is the default Port.

The diagram illustrates a typical connection of a 12-button keypad to a PIC16F84. If a 16-button type is used, then COLUMN 4 will connect to PORTB.7 (*RB7*).

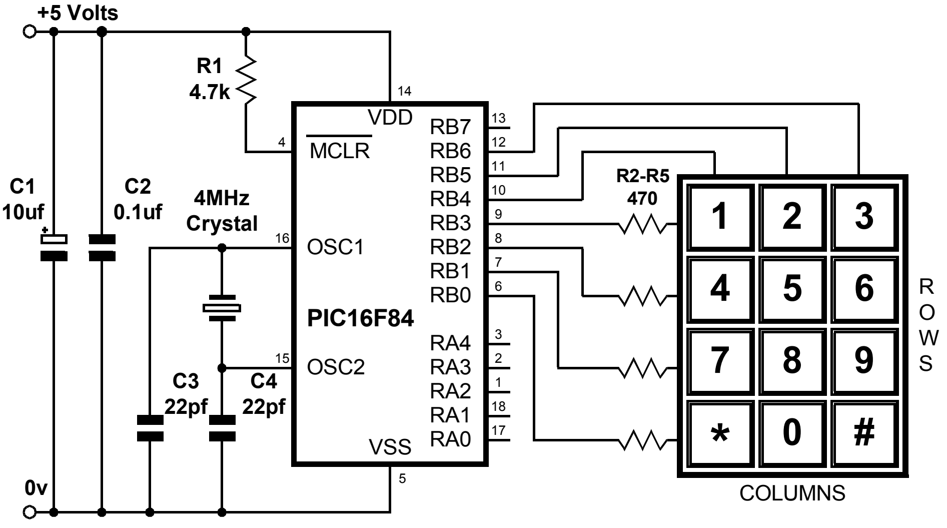
+5 Volts
R1
4.7k
C1
10uf
C2
0.1uf
4MHz
Crystal
C3
22pf
C4
22pf
0v
14
4
16
15
5
VDD
MCLR
OSC1
OSC2
PIC16F84
VSS
RB7
RB6
RB5
RB4
RB3
RB2
RB1
RB0
RA4
RA3
RA2
RA1
RA0
13
12
11
10
9
8
7
6
3
2
1
18
17
R2-R5
470
1
2
3
4
5
6
7
8
9
*
0
#
ROWS
COLUMNS

INPUT

Syntax
INPUT *Port* ***.*** *Pin*

Overview
Makes the specified *Port* or *Pin* an input.

Operators
Port.Pin must be a Port, or Port.Pin constant declaration.

Example

```
INPUT PORTA.0             ' Make bit-0 of PORTA an input

INPUT PORTA               ' Make all of PORTA an input
```

Notes
An Alternative method for making a particular pin an input is by directly modifying the TRIS register: -

```
TRISB.0 = 1               ' Set PORTB, bit-0 to an input
```

All of the pins on a port may be set to inputs by setting the whole TRIS register at once: -

```
TRISB = %11111111         ' Set all of PORTB to inputs
```

In the above examples, setting a TRIS bit to 1 makes the pin an input, and conversely, setting the bit to 0 makes the pin an output.

See also : **OUTPUT.**

LCDREAD

Syntax
Variable **= LCDREAD** *Line Number* , *Xpos*

Overview
Read a byte from a graphic LCD.

Operators
Variable is a user defined variable.
Line Number may be a constant, variable or expression within the range of 0 to 7. This corresponds to the line number of the LCD, with 0 being the top row.
Xpos may be a constant, variable or expression with a value of 0 to 127. This corresponds to the X position of the LCD, with 0 being the far left column.

Example

```
' Read and display the top row of the LCD
DEVICE 16F877
LCD_TYPE = GRAPHIC                  ' Target a graphic LCD

DIM VAR1 AS BYTE
DIM XPOS AS BYTE
CLS                                 ' Clear the LCD
PRINT "Testing 1 2 3"
FOR XPOS = 0 TO 127                 ' Create a loop of 128
VAR1 = LCDREAD 0 , Xpos             ' Read the LCD's top line
PRINT AT 1 , 0 , "Chr= " , DEC VAR1," "
DELAYMS 100
NEXT
STOP
```

Notes
The graphic LCDs that are compatible with PROTON+ are non- intelligent types based on the Samsung S6B0108 chipset. These have a pixel resolution of 64 x 128. The 64 being the Y axis, made up of 8 lines each having 8-bits. The 128 being the X axis, made up of 128 positions. See **LCDWRITE**.

As with **LCDWRITE**, the graphic LCD must be targeted using the **LCD_TYPE** DECLARE directive before this command may be used.

See also : LCDWRITE, PLOT, UNPLOT, see PRINT for LCD connections.

LCDWRITE

Syntax

LCDWRITE *Line number* , *Xpos* , **[** *Value* ,{ *Value etc…*} **]**

Overview

Write a byte to a graphic LCD.

Operators

Line Number may be a constant, variable or expression within the range of 0 to 7. This corresponds to the line number of the LCD, with 0 being the top row.
Xpos may be a constant, variable or expression within the value of 0 to 127. This corresponds to the X position of the LCD, with 0 being the far left column.
Value may be a constant, variable, or expression, within the range of 0 to 255 (byte).

Example

```
'Display a line on the top row of the LCD
DEVICE 16F877
LCD_TYPE = GRAPHIC                  ' Target a graphic LCD
DIM XPOS AS BYTE
CLS                                 ' Clear the LCD
FOR XPOS = 0 TO 127                 ' Create a loop of 128
LCDWRITE 0 , XPOS, [%00001111 ]     ' Write to the LCD's top line
DELAYMS 100
NEXT
STOP
```

Notes

The graphic LCDs that are compatible with PROTON+ are non-intelligent types based on the Samsung S6B0108 chipset. These have a pixel resolution of 64 x 128. The 64 being the Y axis, made up of 8 lines each having 8-bits. The 128 being the X axis, made up of 128 positions. See below: -

The diagram illustrates the position of one byte at position 0,0 on the LCD screen. The least significant bit is located at the top. The byte displayed has a value of 149 (10010101).

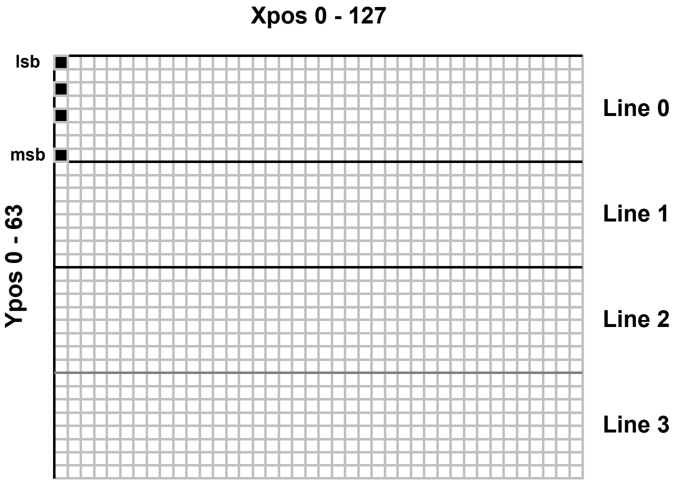

See also : LCDREAD, PLOT, UNPLOT, see PRINT for LCD connections.

LDATA

Syntax
LDATA { *alphanumeric data* }

Overview
Place information into code memory using the RETLW instruction when used with 14-bit core devices, and FLASH memory when using a 16-bit core device. For access by LREAD.

Operators
alphanumeric data can be a 8,16, 32 bit value, or floating point values, or any alphabetic character or string enclosed in quotes.

Example

```
        DEVICE 16F877
        DIM CHAR AS BYTE
        DIM LOOP AS BYTE
        CLS
        FOR LOOP = 0 TO 9                ' Create a loop of 10
        CHAR = LREAD LABEL + LOOP        ' Read memory location LABEL + LOOP
        PRINT CHAR                       ' Display the value read
        NEXT
        STOP
LABEL: LDATA "HELLO WORLD"               ' Create a string of text in code memory
```

The program above reads and displays 10 values from the address located by the LABEL accompanying the **LDATA** command. Resulting in "HELLO WORL" being displayed.

LDATA is not simply used for character storage, it may also hold 8, 16, 32 bit, or floating point values. The example below illustrates this: -

```
        DEVICE = 16F628
        DIM VAR1 AS BYTE
        DIM WRD1 AS WORD
        DIM DWD1 AS DWORD
        DIM FLT1 AS FLOAT
        CLS
        VAR1 = LREAD BIT8_VAL            ' Read the 8-bit value
        PRINT DEC VAR1,"  "
        WRD1= LREAD BIT16_VAL            ' Read the 16-bit value
        PRINT DEC WRD1
        DWD1 = LREAD BIT32_VAL           ' Read the 32-bit value
        PRINT AT 2,1, DEC DWD1,"  "
        FLT1 = LREAD FLT_VAL             ' Read the floating point value
        PRINT DEC FLT1
        STOP
BIT8_VAL: LDATA 123
BIT16_VAL: LDATA 1234
BIT32_VAL: LDATA 123456
FLT_VAL: LDATA 123.456
```

Floating point examples.

14-bit core example

```
        ' 14-bit read floating point data from a table and display the results
        DEVICE = 16F877
        DIM FLT AS FLOAT                    ' Declare a FLOATING POINT variable
        DIM F_COUNT AS BYTE
        CLS                                 ' Clear the LCD
        F_COUNT = 0                         ' Clear the table counter
        REPEAT                              ' Create a loop
        FLT = LREAD FL_TABLE + F_COUNT      ' Read the data from the LDATA table
        PRINT AT 1 , 1 , DEC3 FLT           ' Display the data read
        F_COUNT = F_COUNT + 4               ' Point to next value, by adding 4 to counter
        DELAYMS 1000                        ' Slow things down
        UNTIL FLT = 0.005                   ' Stop when 0.005 is read
        STOP
FL_TABLE:
        LDATA AS FLOAT 3.14 , 65535.123 , 1234.5678 , -1243.456 , -3.14 , 998999.12 ,_
                0.005
```

16-bit core example

```
        ' 16-bit read floating point data from a table and display the results
        DEVICE = 18F452
        DIM FLT AS FLOAT                    ' Declare a FLOATING POINT variable
        DIM F_COUNT AS BYTE
        CLS                                 ' Clear the LCD
        F_COUNT = 0                         ' Clear the table counter
        REPEAT                              ' Create a loop
        FLT = LREAD FL_TABLE + F_COUNT      ' Read the data from the LDATA table
        PRINT AT 1 , 1 , DEC3 FLT           ' Display the data read
        F_COUNT = F_COUNT + 2               ' Point to next value, by adding 2 to counter
        DELAYMS 1000                        ' Slow things down
        UNTIL FLT = 0.005                   ' Stop when 0.005 is read
        STOP
FL_TABLE:
        LDATA AS FLOAT 3.14 , 65535.123 , 1234.5678 , -1243.456 , -3.14 , 998999.12 ,_
                       0.005
```

Notes

LDATA tables should be placed at the end of the BASIC program. If an **LDATA** table is placed at the beginning of the program, then a **GOTO** command must jump over the tables, to the main body of code.

```
        GOTO OVER_DATA_TABLE

        LDATA 1,2,3,4,5,6

OVER_DATA_TABLE:

        { rest of code here}
```

With **14-bit** core devices, an 8-bit value (0 - 255) in an **LDATA** statement will occupy a single code space, however, 16-bit data (0 - 65535) will occupy two spaces, 32-bit and floating point values will occupy 4 spaces. This must be taken into account when using the LREAD command. See 14-bit floating point example above.

With **16-bit** core devices, an 8, and 16-bit value in an **LDATA** statement will occupy a single code space, however, 32-bit and floating point values will occupy 2 spaces. This must be taken into account when using the **LREAD** command. See 16-bit floating point example above.

16-bit device requirements.
The compiler uses a different method of holding information in an **LDATA** statement when using 16-bit core devices. It uses the unique capability of these devices to read from their own code space, which offers optimisations when values larger than 8-bits are stored. However, because the 16-bit core devices are **BYTE** oriented, as opposed to the 14-bit types which are **WORD** oriented. The **LDATA** tables should contain an even number of values, or corruption may occur on the last value read. For example: -

EVEN: **LDATA** 1,2,3,"123"

ODD: **LDATA** 1,2,3,"12"

An **LDATA** table containing an ODD amount of values will produce a compiler WARNING message.

Formatting an LDATA table.

Sometimes it is necessary to create a data table with an known format for its values. For example all values will occupy 4 bytes of code space even though the value itself would only occupy 1 or 2 bytes. I use the name BYTE loosely, as 14-bit core devices use 14-bit Words, as opposed to 16-bit core devices that do actually use Bytes.

```
LDATA 100000 , 10000 , 1000 , 100 , 10 , 1
```

The above line of code would produce an uneven code space usage, as each value requires a different amount of code space to hold the values. 100000 would require 4 bytes of code space, 10000 and 1000 would require 2 bytes, but 100, 10, and 1 would only require 1 byte.

Reading these values using **LREAD** would cause problems because there is no way of knowing the amount of bytes to read in order to increment to the next valid value.

The answer is to use formatters to ensure that a value occupies a predetermined amount of bytes. These are: -

BYTE
WORD
DWORD
FLOAT

Placing one of these formatters before the value in question will force a given length.

```
LDATA     DWORD 100000 , DWORD 10000 , DWORD 1000 ,_
          DWORD 100 , DWORD 10 , DWORD 1
```

BYTE will force the value to occupy one byte of code space, regardless of it's value. Any values above 255 will be truncated to the least significant byte.

WORD will force the value to occupy 2 bytes of code space, regardless of its value. Any values above 65535 will be truncated to the two least significant bytes. Any value below 255 will be padded to bring the memory count to 2 bytes.

DWORD will force the value to occupy 4 bytes of code space, regardless of its value. Any value below 65535 will be padded to bring the memory count to 4 bytes. The line of code shown above uses the **DWORD** formatter to ensure all the values in the **LDATA** table occupy 4 bytes of code space.

FLOAT will force a value to its floating point equivalent, which always takes up 4 bytes of code space.

If all the values in an **LDATA** table are required to occupy the same amount of bytes, then a single formatter will ensure that this happens.

```
        LDATA AS DWORD 100000 , 10000 , 1000 , 100 , 10 , 1
```

The above line has the same effect as the formatter previous example using separate **DWORD** formatters, in that all values will occupy 4 bytes, regardless of their value. All four formatters can be used with the **AS** keyword.

The example below illustrates the formatters in use.

```
' Convert a DWORD value into a string array using only BASIC commands
' Similar principle to the STR$ command

        INCLUDE "PROTON_4.INC"

        DIM P10 AS DWORD              ' Power of 10 variable
        DIM CNT AS BYTE
        DIM J AS BYTE
        DIM VALUE AS BYTE             ' Value to convert
        DIM STRING1[11] AS BYTE       ' Holds the converted value
        DIM PTR AS BYTE               ' Pointer within the Byte array
        DELAYMS 500                   ' Wait for PICmicro to stabilise
        CLS                           ' Clear the LCD
        Clear                         ' Clear all RAM before we start
        VALUE = 1234576               ' Value to convert
        GOSUB DWORD_TO_STR            ' Convert VALUE to string
        PRINT STR STRING1             ' Display the result
        Stop
'-------------------------------------------------------------
' Convert a DWORD value into a string array. Value to convert is placed in 'VALUE'
' Byte array 'STRING1' is built up with the ASCII equivalent

DWORD_TO_STR:
        PTR = 0
        J = 0
        REPEAT
        P10 = LREAD DWORD_TBL + (J * 4)
        CNT = 0
        WHILE VALUE >= P10
        VALUE = VALUE - P10
        INC CNT
        WEND
        IF CNT <> 0 THEN
        STRING1[PTR] = CNT + "0"
        INC PTR
        ENDIF
        INC J
        UNTIL J > 8
        STRING1[PTR] = VALUE + "0"
        INC PTR
        STRING1[PTR] = 0           ' Add the NULL to terminate the string
        RETURN
' LDATA table is formatted for all 32 bit values.
' Which means each value will require 4 bytes of code space
DWORD_TBL:
LDATA AS DWORD 1000000000, 100000000, 10000000, 1000000, 100000, 10000, 1000, 100, 10
```

Label names as pointers.

If a label's name is used in the list of values in an **LDATA** table, the label's address will be used. This is useful for accessing other tables of data using their address from a lookup table. See example below.

```
' Display text from two LDATA tables
' Based on their address located in a separate table

        INCLUDE "PROTON_4.INC"                  ' Use a 14-bit core device
        DIM ADDRESS AS WORD
        DIM DATA_BYTE AS BYTE
        DELAYMS 200                             ' Wait for PICmicro to stabilise
        CLS                                     ' Clear the LCD
        ADDRESS = LREAD ADDR_TABLE              ' Locate the address of the first string
        WHILE 1 = 1                             ' Create an infinite loop
        DATA_BYTE = LREAD ADDRESS       ' Read each character from the LDATA string
        IF DATA_BYTE = 0 THEN EXIT_LOOP         ' Exit if NULL found
        PRINT DATA_BYTE                         ' Display the character
        INC ADDRESS                             ' Next character
        WEND                                    ' Close the loop
EXIT_LOOP:
        CURSOR 2,1                              ' Point to line 2 of the LCD
        ADDRESS = LREAD ADDR_TABLE + 2          ' Locate the address of the second string
        WHILE 1 = 1                             ' Create an infinite loop
        DATA_BYTE = LREAD ADDRESS       ' Read each character from the LDATA string
        IF DATA_BYTE = 0 THEN EXIT_LOOP2        ' Exit if NULL found
        PRINT DATA_BYTE                         ' Display the character
        INC ADDRESS                             ' Next character
        WEND                                    ' Close the loop
EXIT_LOOP2:
        STOP

ADDR_TABLE:                                     ' Table of address's
                LDATA AS WORD STRING1, STRING2
STRING1:
                LDATA "HELLO",0
STRING2:
                LDATA "WORLD",0
```

See also : CDATA, CREAD, DATA, EDATA, LREAD, READ, RESTORE.

LET

Syntax
[**LET**] *Variable* **=** *Expression*

Overview
Assigns an expression, command result, variable, or constant, to a variable

Operators
Variable is a user defined variable.
Expression is one of many options - these can be a combination of variables, expressions, and numbers or other command calls.

Example 1
```
LET A = 1
A = 1
```
Both the above statements are the same

Example 2
```
A = B + 3
```

Example 3
```
A = A << 1
```

Example 4
```
LET B = EREAD C + 8
```

Notes
The **LET** command is optional, and is a leftover from earlier BASICs.

See also : DIM, SYMBOL.

LEN

Syntax
Variable **= LEN (***Source String***)**

Overview
Find the length of a **STRING**. (not including the NULL terminator) .

Operators
Variable is a user defined variable of type **BIT**, **BYTE**, **BYTE_ARRAY**, **WORD**, **WORD_ARRAY**, **DWORD**, or **FLOAT**.
Source String can be a **STRING** variable, or a Quoted String of Characters. The *Source String* can also be a **BYTE**, **WORD**, **BYTE_ARRAY**, **WORD_ARRAY** or **FLOAT** variable, in which case the value contained within the variable is used as a pointer to the start of the Source String's address in RAM. A third possibility for *Source String* is a LABEL name, in which case a NULL terminated Quoted String of Characters is read from a **CDATA** table.

Example 1

```
        ' Display the length of SOURCE_STRING
        DEVICE = 18F452                         ' Must be a 16-bit core device for Strings
        DIM SOURCE_STRING as STRING * 20 ' Create a String capable of 20 characters
        DIM LENGTH as BYTE

        SOURCE_STRING = "HELLO WORLD"           ' Load the source string with characters
        LENGTH = LEN (SOURCE_STRING)            ' Find the length
        PRINT DEC LENGTH                        ' Display the result, which will be 11
        STOP
```

Example 2

```
        ' Display the length of a Quoted Character String
        DEVICE = 18F452                         ' Must be a 16-bit core device for Strings
        DIM LENGTH as BYTE

        LENGTH = LEN ("HELLO WORLD")            ' Find the length
        PRINT DEC LENGTH                        ' Display the result, which will be 11
        STOP
```

Example 3

```
        ' Display the length of SOURCE_STRING using a pointer to SOURCE_STRING
        DEVICE = 18F452                         ' Must be a 16-bit core device for Strings
        DIM SOURCE_STRING as STRING * 20 ' Create a String capable of 20 characters
        DIM LENGTH as BYTE
        ' Create a WORD variable to hold the address of SOURCE_STRING
        DIM STRING_ADDR as WORD

        SOURCE_STRING = "HELLO WORLD"           ' Load the source string with characters
        STRING_ADDR = VARPTR (SOURCE_STRING)        ' Locate the start address of
SOURCE_STRING in RAM
        LENGTH = LEN(STRING_ADDR)               ' Find the length
        PRINT DEC LENGTH                        ' Display the result, which will be 11
        STOP
```

Example 4

```
        ' Display the length of a CDATA string
        DEVICE = 18F452                         ' Must be a 16-bit core device for Strings
        DIM LENGTH as BYTE

        LENGTH = LEN (SOURCE)                   ' Find the length
        PRINT DEC LENGTH                        ' Display the result, which will be 11
        STOP
' Create a NULL terminated string of characters in code memory
SOURCE:
        CDATA "HELLO WORLD" , 0
```

See also : Creating and using Strings , Creating and using VIRTUAL STRINGS with CDATA, CDATA, LEFT$, MID$, RIGHT$, STR$, TOLOWER, TOUPPER, VARPTR .

LEFT$

Syntax

Destination String = **LEFT$ (***Source String* **,** *Amount of characters***)**

Overview

Extract *n* amount of characters from the left of a source string and copy them into a destination string.

Operators

Destination String can only be a **STRING** variable, and should be large enough to hold the correct amount of characters extracted from the *Source String*.
Source String can be a **STRING** variable, or a Quoted String of Characters. See below for more variable types that can be used for *Source String*.
Amount of characters can be any valid variable type, expression or constant value, that signifies the amount of characters to extract from the left of the *Source String*. Values start at 1 for the leftmost part of the string and should not exceed 255 which is the maximum allowable length of a STRING variable.

Example 1.

' Copy 5 characters from the left of SOURCE_STRING into DEST_STRING

```
DEVICE = 18F452                          ' Must be a 16-bit core device for Strings
DIM SOURCE_STRING as STRING * 20 ' Create a String capable of 20 characters
DIM DEST_STRING as STRING * 20     ' Create another String for 20 characters

SOURCE_STRING = "HELLO WORLD"           ' Load the source string with characters
' Copy 5 characters from the source string into the destination string
DEST_STRING = LEFT$ (SOURCE_STRING , 5)
PRINT DEST_STRING                        ' Display the result, which will be "HELLO"
STOP
```

Example 2.

' Copy 5 characters from the left of a Quoted Character String into DEST_STRING

```
DEVICE = 18F452                          ' Must be a 16-bit core device for Strings
DIM DEST_STRING as STRING * 20     ' Create a String capable of 20 characters

' Copy 5 characters from the quoted string into the destination string
DEST_STRING = LEFT$ ("HELLO WORLD" , 5)
PRINT DEST_STRING                        ' Display the result, which will be "HELLO"
STOP
```

The *Source String* can also be a **BYTE**, **WORD**, **BYTE_ARRAY**, **WORD_ARRAY** or **FLOAT** variable, in which case the value contained within the variable is used as a pointer to the start of the Source String's address in RAM.

Example 3.

```
' Copy 5 characters from the left of SOURCE_STRING into DEST_STRING using a pointer to
‘ SOURCE_STRING

        DEVICE = 18F452                          ' Must be a 16-bit core device for Strings
        DIM SOURCE_STRING as STRING * 20 ' Create a String capable of 20 characters
        DIM DEST_STRING as STRING * 20           ' Create another String for 20 characters
        ' Create a WORD variable to hold the address of SOURCE_STRING
        DIM STRING_ADDR as WORD

        SOURCE_STRING = "HELLO WORLD"            ' Load the source string with characters
        ' Locate the start address of SOURCE_STRING in RAM
        STRING_ADDR = VARPTR (SOURCE_STRING)
        ' Copy 5 characters from the source string into the destination string
        DEST_STRING = LEFT$ (STRING_ADDR , 5)
        PRINT DEST_STRING                   ' Display the result, which will be "HELLO"
        STOP
```

A third possibility for *Source String* is a LABEL name, in which case a NULL terminated Quoted String of Characters is read from a **CDATA** table.

Example 4.

```
' Copy 5 characters from the left of a CDATA table into DEST_STRING

        DEVICE = 18F452                          ' Must be a 16-bit core device for Strings
        DIM DEST_STRING as STRING * 20      ' Create a String capable of 20 characters

        ' Copy 5 characters from label SOURCE into the destination string
        DEST_STRING = LEFT$ (SOURCE , 5)
        PRINT DEST_STRING                   ' Display the result, which will be "HELLO"
        STOP

' Create a NULL terminated string of characters in code memory
SOURCE:
        CDATA "HELLO WORLD" , 0
```

See also : Creating and using Strings, Creating and using VIRTUAL STRINGS with CDATA, CDATA, LEN, MID$, RIGHT$, STR$, TOLOWER, TOUPPER , VARPTR .

LINE

Syntax
LINE *Set_Clear* **,** *Xpos Start* **,** *Ypos Start* **,** *Xpos End* **,** *Ypos End*

Overview
Draw a straight line in any direction on a graphic LCD.

Operators
Set_Clear may be a constant or variable that determines if the line will set or clear the pixels. A value of 1 will set the pixels and draw a line, while a value of 0 will clear any pixels and erase a line.
Xpos Start may be a constant or variable that holds the X position for the start of the line. Can be a value from 0 to 127.
Ypos Start may be a constant or variable that holds the Y position for the start of the line. Can be a value from 0 to 63.
Xpos End may be a constant or variable that holds the X position for the end of the line. Can be a value from 0 to 127.
Ypos End may be a constant or variable that holds the Y position for the end of the line. Can be a value from 0 to 63.

Example
' Draw a line from 0,0 to 120,34

```
INCLUDE "PROTON_G4.INT"

DIM XPOS_START as BYTE
DIM XPOS_END as BYTE
DIM YPOS_START as BYTE
DIM YPOS_END as BYTE
DIM SET_CLR as BYTE

DELAYMS 200                       ' Wait for PICmicro to stabilise
CLS                               ' Clear the LCD
XPOS_START = 0
YPOS_START = 0
XPOS_END = 120
YPOS_END = 34
SET_CLR = 1
LINE SET_CLR , XPOS_START , YPOS_START , XPOS_END , YPOS_END
STOP
```

See Also : **BOX, CIRCLE.**

LINETO

Syntax

LINETO *Set_Clear* **,** *Xpos End* **,** *Ypos End*

Overview

Draw a straight line in any direction on a graphic LCD, starting from the previous **LINE** command's end position.

Operators

Set_Clear may be a constant or variable that determines if the line will set or clear the pixels. A value of 1 will set the pixels and draw a line, while a value of 0 will clear any pixels and erase a line.
Xpos End may be a constant or variable that holds the X position for the end of the line. Can be a value from 0 to 127.
Ypos End may be a constant or variable that holds the Y position for the end of the line. Can be a value from 0 to 63.

Example

```
' Draw a line from 0,0 to 120,34. Then from 120,34 to 0,63

    INCLUDE "PROTON_G4.INT"

    DIM XPOS_START as BYTE
    DIM XPOS_END as BYTE
    DIM YPOS_START as BYTE
    DIM YPOS_END as BYTE
    DIM SET_CLR as BYTE

    DELAYMS 200                     ' Wait for PICmicro to stabilise
    CLS                             ' Clear the LCD
    XPOS_START = 0
    YPOS_START = 0
    XPOS_END = 120
    YPOS_END = 34
    SET_CLR = 1
    LINE SET_CLR , XPOS_START , YPOS_START , XPOS_END , YPOS_END
    XPOS_END = 0
    YPOS_END = 63
    LINETO SET_CLR , XPOS_END , YPOS_END
    STOP
```

Notes

The **LINETO** command uses the compiler's internal system variables to obtain the end position of a previous **LINE** command. These X and Y coordinates are then used as the starting X and Y coordinates of the **LINETO** command.

See Also : LINE, BOX, CIRCLE.

LOADBIT

Syntax
LOADBIT *Variable* , *Index* , *Value*

Overview
Clear, or Set a bit of a variable or register using a variable index to point to the bit of interest.

Operators
Variable is a user defined variable, of type **BYTE**, **WORD**, or **DWORD**.
Index is a constant, variable, or expression that points to the bit within *Variable* that requires accessing.
Value is a constant, variable, or expression that will be placed into the bit of interest. Values greater than 1 will set the bit.

Example

```
        ' Copy variable EX_VAR bit by bit into variable PT_VAR
        DEVICE = 16F877
        XTAL = 4
        DIM EX_VAR AS WORD
        DIM INDEX AS BYTE
        DIM VALUE AS BYTE
        DIM PT_VAR AS WORD
AGAIN:
        PT_VAR = %0000000000000000
        EX_VAR = %1011011000110111
        CLS
        FOR INDEX = 0 TO 15                 ' Create a loop for 16 bits
        VALUE = GETBIT EX_VAR , INDEX       ' Examine each bit of variable EX_VAR
        LOADBIT PT_VAR , INDEX , VALUE      ' Set or Clear each bit of PT_VAR
        PRINT AT 1,1,BIN16 EX_VAR           ' Display the original variable
        PRINT AT 2,1,BIN16 PT_VAR           ' Display the copied variable
        DELAYMS 100                         ' Slow things down to see what's happening
        NEXT                                ' Close the loop
        GOTO AGAIN                          ' Do it forever
```

Notes
There are many ways to clear or set a bit within a variable, however, each method requires a certain amount of manipulation, either with rotates, or alternatively, the use of indirect addressing using the FSR, and INDF registers. Each method has its merits, but requires a certain amount of knowledge to accomplish the task correctly. The **LOADBIT** command makes this task extremely simple by taking advantage of the indirect method using FSR, and INDF, however, this is not necessarily the quickest method, or the smallest, but it is the easiest. For speed and size optimisation, there is no shortcut to experience.

To CLEAR a known constant bit of a variable or register, then access the bit directly using PORT.n.
i.e. PORTA**.**1 = 0

To SET a known constant bit of a variable or register, then access the bit directly using PORT.n. i.e.
PORTA**.**1 = 1

If a PORT is targeted by **LOADBIT**, the TRIS register is **NOT** affected.

See also : **CLEARBIT, GETBIT, SETBIT.**

LOOKDOWN

Syntax

Variable **= LOOKDOWN** *Index* , **[** *Constant* { , *Constant*…etc } **]**

Overview

Search *constants(s)* for *index* value. If *index* matches one of the *constants*, then store the matching *constant's* position (0-N) in *variabl*e. If no match is found, then the *variable* is unaffected.

Operators

Variable is a user define variable that holds the result of the search.
Index is the variable/constant being sought.
Constant(s),... is a list of values. A maximum of 255 values may be placed between the square brackets, 256 if using a 16-bit core device.

Example

```
    DIM Value AS BYTE
    DIM Result AS BYTE
    Value = 177                ' The value to look for in the list
    Result = 255               ' Default to value 255
    Result = LOOKDOWN Value , [75,177,35,1,8,29,245]
    PRINT "Value matches " , DEC Result , " in list"
```

In the above example, **PRINT** displays, "Value matches 1 in list" because VALUE (177) matches item 1 of [75,177,35,1,8,29,245]. Note that index numbers count up from 0, not 1; that is in the list [75,177,35,1,8,29,245], 75 is item 0.

If the value is not in the list, then RESULT is unchanged.

Notes

LOOKDOWN is similar to the index of a book. You search for a topic and the index gives you the page number. Lookdown searches for a value in a list, and stores the item number of the first match in a variable.

LOOKDOWN also supports text phrases, which are basically lists of byte values, so they are also eligible for Lookdown searches:

```
    DIM Value AS BYTE
    DIM Result AS BYTE
    Value = 101                ' ASCII "e". the value to look for in the list
    Result = 255               ' Default to value 255
    Result = LOOKDOWN Value , ["Hello World"]
```

In the above example, RESULT will hold a value of 1, which is the position of character 'e'

See also : CDATA, CREAD, DATA, EDATA, EREAD, LDATA, LOOKDOWNL, LOOKUP, LOOKUPL, LREAD, READ, RESTORE.

LOOKDOWNL

Syntax

Variable **= LOOKDOWNL** *Index* , {*Operator*} **[** *Value* { , *Value*…etc } **]**

Overview

A comparison is made between *index* and *value*; if the result is true, 0 is written into *variable.* If that comparison was false, another comparison is made between *value* and *value*1; if the result is true, 1 is written into variable. This process continues until a true is yielded, at which time the *index* is written into *variabl*e, or until all entries are exhausted, in which case *variable* is unaffected.

Operators

Variable is a user define variable that holds the result of the search.
Index is the variable/constant being sought.
Value*(s)* can be a mixture of 16-bit constants, string constants and variables. Expressions may not be used in the *Value* list, although they may be used as the *index* value. A maximum of 85 values may be placed between the square brackets, 256 if using a 16-bit core device.
Operator is an optional comparison operator and may be one of the following: -

= equal
<> not equal
> greater than
< less than
>= greater than or equal to
<= less than or equal to

The optional operator can be used to perform a test for other than equal to ("=") while searching the list. For example, the list could be searched for the first *Value* greater than the *index* parameter by using ">" as the *operator*. If *operator* is left out, "=" is assumed.

Example

```
VAR1 = LOOKDOWNL WRD , [ 512 , WRD1, 1024 ]
VAR1 = LOOKDOWNL WRD , < [ 10 , 100 , 1000 ]
```

Notes

Because **LOOKDOWNL** is more versatile than the standard **LOOKDOWN** command, it generates larger code. Therefore, if the search list is made up only of 8-bit constants and strings, use **LOOKDOWN**.

See also : CDATA, CREAD, DATA, EDATA, EREAD, LDATA, LOOKDOWN, LOOKUP, LOOKUPL, LREAD, READ, RESTORE.

LOOKUP

Syntax

Variable **= LOOKUP** *Index* , **[** *Constant* { , *Constant*…etc } **]**

Overview

Look up the value specified by the index and store it in variable. If the index exceeds the highest index value of the items in the list, then variable remains unchanged.

Operators

Variable may be a constant, variable, or expression. This is where the retrieved value will be stored.
Index may be a constant of variable. This is the item number of the value to be retrieved from the list.
Constant*(s)* may be any 8-bit value (0-255). A maximum of 255 values may be placed between the square brackets, 256 if using a 16-bit core device.

Example

```
        ' Create an animation of a spinning line.
        DIM INDEX AS BYTE
        DIM Frame AS BYTE
        CLS                                   ' Clear the LCD
Rotate:
        FOR INDEX = 0 TO 3                    ' Create a loop of 4
        Frame = LOOKUP INDEX , [ "|\-/" ]     ' Table of animation characters
        PRINT AT 1 , 1 , Frame                ' Display the character
        DELAYMS 200                           ' So we can see the animation
        NEXT                                  ' Close the loop
        GOTO Rotate                           ' Repeat forever
```

Notes

index starts at value 0. For example, in the **LOOKUP** command below. If the first value (10) is required, then index will be loaded with 0, and 1 for the second value (20) etc.

```
        VAR1 = LOOKUP INDEX , [ 10 , 20 , 30 ]
```

See also : CDATA, CREAD, DATA, EDATA, EREAD, LDATA, LOOKDOWN, LOOKDOWNL, LOOKUPL, LREAD, READ, RESTORE.

LOOKUPL

Syntax

Variable **= LOOKUPL** *Index* , **[** *Value* { , *Value*…etc } **]**

Overview

Look up the value specified by the index and store it in variable. If the index exceeds the highest index value of the items in the list, then variable remains unchanged. Works exactly the same as **LOOKUP**, but allows variable types or constants in the list of values.

Operators

Variable may be a constant, variable, or expression. This is where the retrieved value will be stored.
Index may be a constant of variable. This is the item number of the value to be retrieved from the list.
Value*(s)* can be a mixture of 16-bit constants, string constants and variables. A maximum of 85 values may be placed between the square brackets, 256 if using a 16-bit core device.

Example

```
DIM VAR1 AS BYTE
DIM WRD AS WORD
DIM INDEX AS BYTE
DIM Assign AS WORD
VAR1 = 10
WRD = 1234
INDEX = 0                    ' Point to the first value in the list (WRD)
Assign = LOOKUPL INDEX , [ WRD , VAR1 , 12345 ]
```

Notes

Expressions may not be used in the *Value* list, although they may be used as the *Index* value.

Because **LOOKUPL** is capable of processing any variable and constant type, the code produced is a lot larger than that of **LOOKUP**. Therefore, if only 8-bit constants are required in the list, use **LOOKUP** instead.

See also : **CDATA, CREAD, DATA, EDATA, EREAD, LDATA, LOOKDOWN, LOOKDOWNL, LOOKUP, LREAD, READ, RESTORE.**

LOW

Syntax

LOW *Port* or *Port.Bit*

Overview

Place a Port or bit in a low state. For a port, this means filling it with 0's. For a bit this means setting it to 0.

Operators

Port can be any valid port.
Port.Bit can be any valid port and bit combination, i.e. PORTA.1

Example

```
SYMBOL LED = PORTB.4
LOW LED
LOW PORTB.0             ' Clear PORTB bit 0
LOW PORTB               ' Clear all of PORTB
```

See also : **DIM, HIGH, SYMBOL.**

LREAD

Syntax
Variable = **LREAD** *Label*

Overview
Read a value from an **LDATA** table and place into *Variable*

Operators
Variable is a user defined variable.
Label is a label name preceding the **LDATA** statement, or expression containing the *Label* name.

Example

```
        DEVICE 16F877
        DIM CHAR AS BYTE
        DIM LOOP AS BYTE
        CLS
        FOR LOOP = 0 TO 9                  ' Create a loop of 10
        CHAR = LREAD LABEL + LOOP          ' Read memory location LABEL + LOOP
        PRINT CHAR                         ' Display the value read
        NEXT
        STOP
LABEL: LDATA "HELLO WORLD"                 ' Create a string of text in code memory
```

The program above reads and displays 10 values from the address located by the LABEL accompanying the **LDATA** command. Resulting in "HELLO WORL" being displayed.

LDATA is not simply used for character storage, it may also hold 8, 16, 32 bit, or floating point values. The example below illustrates this: -

```
        DEVICE = 16F628
        DIM VAR1 AS BYTE
        DIM WRD1 AS WORD
        DIM DWD1 AS DWORD
        DIM FLT1 AS FLOAT
        CLS
        VAR1 = LREAD BIT8_VAL          ' Read the 8-bit value
        PRINT DEC VAR1,"  "
        WRD1= LREAD BIT16_VAL          ' Read the 16-bit value
        PRINT DEC WRD1
        DWD1 = LREAD BIT32_VAL         ' Read the 32-bit value
        PRINT AT 2,1, DEC DWD1,"  "
        FLT1 = LREAD FLT_VAL           ' Read the floating point value
        PRINT DEC FLT1
        STOP
BIT8_VAL: LDATA 123
BIT16_VAL: LDATA 1234
BIT32_VAL: LDATA 123456
FLT_VAL: LDATA 123.456
```

Floating point examples.

14-bit core example

```
        ' 14-bit read floating point data from a table and display the results
        DEVICE = 16F877
        DIM FLT AS FLOAT                    ' Declare a FLOATING POINT variable
        DIM F_COUNT AS BYTE
        CLS                                 ' Clear the LCD
        F_COUNT = 0                         ' Clear the table counter
        REPEAT                              ' Create a loop
        FLT = LREAD FL_TABLE + F_COUNT      ' Read the data from the LDATA table
        PRINT AT 1 , 1 , DEC3 FLT           ' Display the data read
        F_COUNT = F_COUNT + 4               ' Point to next value, by adding 4 to counter
        DELAYMS 1000                        ' Slow things down
        UNTIL FLT = 0.005                   ' Stop when 0.005 is read
        STOP
FL_TABLE:
        LDATA AS FLOAT 3.14 , 65535.123 , 1234.5678 , -1243.456 , -3.14 , 998999.12 ,_
                       0.005
```

16-bit core example

```
        ' 16-bit read floating point data from a table and display the results
        DEVICE = 18F452
        DIM FLT AS FLOAT                    ' Declare a FLOATING POINT variable
        DIM F_COUNT AS BYTE
        CLS                                 ' Clear the LCD
        F_COUNT = 0                         ' Clear the table counter
        REPEAT                              ' Create a loop
        FLT = LREAD FL_TABLE + F_COUNT      ' Read the data from the LDATA table
        PRINT AT 1 , 1 , DEC3 FLT           ' Display the data read
        F_COUNT = F_COUNT + 2               ' Point to next value, by adding 2 to counter
        DELAYMS 1000                        ' Slow things down
        UNTIL FLT = 0.005                   ' Stop when 0.005 is read
        STOP
FL_TABLE:
        LDATA AS FLOAT 3.14 , 65535.123 , 1234.5678 , -1243.456 , -3.14 , 998999.12 ,_
                       0.005
```

Notes

LDATA tables should be placed at the end of the BASIC program. If an **LDATA** table is placed at the beginning of the program, then a **GOTO** command must jump over the tables, to the main body of code.

```
        GOTO OVER_DATA_TABLE
        LDATA 1,2,3,4,5,6
OVER_DATA_TABLE:

        { rest of code here}
```

With 14-bit core devices, an 8-bit value (0 - 255) in an **LDATA** statement will occupy a single code space, however, 16-bit data (0 - 65535) will occupy two spaces, 32-bit and floating point values will occupy 4 spaces. This must be taken into account when using the **LREAD** command. See 14-bit floating point example above.

With **16-bit** core devices, an 8, and 16-bit value in an **LDATA** statement will occupy a single code space, however, 32-bit and floating point values will occupy 2 spaces. This must be taken into account when using the **LREAD** command. See previous 16-bit floating point example.

See also : **CDATA, CREAD, DATA, LDATA, READ, RESTORE.**

LREAD8, LREAD16, LREAD32

Syntax
Variable **= LREAD8** *Label* **[** *Offset Variable* **]**

or

Variable **= LREAD16** *Label* **[** *Offset Variable* **]**

or

Variable **= LREAD32** *Label* **[** *Offset Variable* **]**

Overview
Read an 8, 16, or 32-bit value from an **LDATA** table using an offset of *Offset Variable* and place into *Variable*, with more efficiency than using **LREAD** . For PICmicro's that can access their own code memory, such as the 16F87x and all the 18F range.

LREAD8 will access 8-bit values from an **LDATA** table.
LREAD16 will access 16-bit values from an **LDATA** table.
LREAD32 will access 32-bit values from an **LDATA** table, this also includes floating point values.

Operators
Variable is a user defined variable of type **BIT**, **BYTE**, **BYTE_ARRAY**, **WORD**, **WORD_ARRAY**, **DWORD**, or **FLOAT**.
Label is a label name preceding the **LDATA** statement of which values will be read from.
Offset Variable can be a constant value, variable, or expression that points to the location of interest within the **LDATA** table.

LREAD8 Example
```
' Extract the second value from within an 8-bit LDATA table
        DEVICE = 16F877
        DIM OFFSET AS BYTE                  ' Declare a BYTE size variable for the offset
        DIM RESULT AS BYTE                  ' Declare a BYTE size variable to hold the result

        CLS                                 ' Clear the LCD
        OFFSET = 1                          ' Point to the second value in the LDATA table
        ' Read the 8-bit value pointed to by OFFSET
        RESULT = LREAD8 BYTE_TABLE [OFFSET]
        PRINT DEC RESULT                    ' Display the decimal result on the LCD
        STOP

' Create a table containing only 8-bit values
BYTE_TABLE: LDATA AS BYTE 100 , 200
```

LREAD16 Example

```
' Extract the second value from within a 16-bit LDATA table
    DEVICE = 16F877
    DIM OFFSET AS BYTE                ' Declare a BYTE size variable for the offset
    DIM RESULT AS WORD            ' Declare a WORD size variable to hold the result

    CLS                               ' Clear the LCD
    OFFSET = 1                        ' Point to the second value in the LDATA table
    ' Read the 16-bit value pointed to by OFFSET
    RESULT = LREAD16 WORD_TABLE [OFFSET]
    PRINT DEC RESULT                  ' Display the decimal result on the LCD
    STOP

' Create a table containing only 16-bit values
WORD_TABLE: LDATA AS WORD 1234 , 5678
```

LREAD32 Example

```
' Extract the second value from within a 32-bit LDATA table
    DEVICE = 16F877
    DIM OFFSET AS BYTE                ' Declare a BYTE size variable for the offset
    DIM RESULT AS DWORD           ' Declare a DWORD size variable to hold the result

    CLS                               ' Clear the LCD
    OFFSET = 1                        ' Point to the second value in the LDATA table
    ' Read the 32-bit value pointed to by OFFSET
    RESULT = LREAD32 DWORD_TABLE [OFFSET]
    PRINT DEC RESULT                  ' Display the decimal result on the LCD
    STOP

' Create a table containing only 32-bit values
DWORD_TABLE: LDATA AS DWORD 12340 , 56780
```

Notes

Data storage in any program is of paramount importance, and although the standard **LREAD** command can access multi-byte values from an **LDATA** table, it was not originally intended as such, and is more suited to accessing character data or single 8-bit values. However, the **LREAD8**, **LREAD16**, and **LREAD32** commands are specifically written in order to efficiently read data from an **LDATA** table, and use the least amount of code space in doing so, thus increasing the speed of operation. Which means that wherever possible, **LREAD** should be replaced by **LREAD8**, **LREAD16**, or **LREAD32**.

See also : **CDATA, CREAD, DATA, LDATA, LREAD, READ, RESTORE .**

MID$

Syntax
Destination String = **MID$ (***Source String* **,** *Position within String* **,** *Amount of characters***)**

Overview
Extract *n* amount of characters from a source string beginning at *n* characters from the left, and copy them into a destination string.

Operators
Destination String can only be a **STRING** variable, and should be large enough to hold the correct amount of characters extracted from the *Source String*.
Source String can be a **STRING** variable, or a **Quoted String of Characters**. See below for more variable types that can be used for *Source String*.
Position within String can be any valid variable type, expression or constant value, that signifies the position within the Source String from which to start extracting characters. Values start at 1 for the leftmost part of the string and should not exceed 255 which is the maximum allowable length of a STRING variable.
Amount of characters can be any valid variable type, expression or constant value, that signifies the amount of characters to extract from the left of the *Source String*. Values start at 1 and should not exceed 255 which is the maximum allowable length of a STRING variable.

Example 1
' Copy 5 characters from position 4 of SOURCE_STRING into DEST_STRING

```
DEVICE = 18F452                          ' Must be a 16-bit core device for Strings
DIM SOURCE_STRING as STRING * 20         ‘ Create a String of 20 characters
DIM DEST_STRING as STRING * 20           ‘ Create another String

SOURCE_STRING = "HELLO WORLD"            ' Load the source string with characters
' Copy 5 characters from the source string into the destination string
DEST_STRING = MID$ (SOURCE_STRING , 4 , 5)
PRINT DEST_STRING                   ' Display the result, which will be "LO WO"
STOP
```

Example 2
' Copy 5 characters from position 4 of a Quoted Character String into DEST_STRING

```
DEVICE = 18F452                          ' Must be a 16-bit core device for Strings
DIM DEST_STRING as STRING * 20           ‘ Create a String of 20 characters

' Copy 5 characters from the quoted string into the destination string
DEST_STRING = MID$ ("HELLO WORLD" , 4 , 5)
PRINT DEST_STRING                   ' Display the result, which will be "LO WO"
STOP
```

The *Source String* can also be a **BYTE**, **WORD**, **BYTE_ARRAY**, **WORD_ARRAY** or **FLOAT** variable, in which case the value contained within the variable is used as a pointer to the start of the Source String's address in RAM.

Example 3

' Copy 5 characters from position 4 of SOURCE_STRING into DEST_STRING using a pointer
‘ to SOURCE_STRING

```
    DEVICE = 18F452                         ' Must be a 16-bit core device for Strings
    DIM SOURCE_STRING as STRING * 20        ‘ Create a String of 20 characters
    DIM DEST_STRING as STRING * 20          ‘ Create another String
    ' Create a WORD variable to hold the address of SOURCE_STRING
    DIM STRING_ADDR as WORD

    SOURCE_STRING = "HELLO WORLD"           ' Load the source string with characters
    ' Locate the start address of SOURCE_STRING in RAM
    STRING_ADDR = VARPTR (SOURCE_STRING)
    ' Copy 5 characters from the source string into the destination string
    DEST_STRING = MID$ (STRING_ADDR , 4 , 5)
    PRINT DEST_STRING                   ' Display the result, which will be "LO WO"
    STOP
```

A third possibility for *Source String* is a LABEL name, in which case a NULL terminated Quoted String of Characters is read from a **CDATA** table.

Example 4

' Copy 5 characters from position 4 of a CDATA table into DEST_STRING

```
    DEVICE = 18F452                         ' Must be a 16-bit core device for Strings
    DIM DEST_STRING as STRING * 20          ‘ Create a String of 20 characters

    ' Copy 5 characters from label SOURCE into the destination string
    DEST_STRING = MID$ (SOURCE , 4 , 5)
    PRINT DEST_STRING                   ' Display the result, which will be "LO WO"
    STOP

' Create a NULL terminated string of characters in code memory
SOURCE:
    CDATA "HELLO WORLD" , 0
```

See also : **Creating and using Strings, Creating and using VIRTUAL STRINGS with CDATA, CDATA, LEN, LEFT$, RIGHT$, STR$, TOLOWER, TOUPPER VARPTR .**

ON GOTO

Syntax
ON *Index Variable* **GOTO** *Label1* {,...*Labeln* }

Overview
Cause the program to jump to different locations based on a variable index. On a PICmicro^{tm} device with only one page of memory. Exactly the same functionality as **BRANCH**.

Operators
Index Variable is a constant, variable, or expression, that specifies the label to jump to.
Label1...***Labeln*** are valid labels that specify where to branch to. A maximum of 255 labels may be placed after the **GOTO**, 256 if using a 16-bit core device.

Example

```
         DEVICE = 16F84
         DIM INDEX as BYTE

         CLS                              ' Clear the LCD
         INDEX = 2                        ' Assign INDEX a value of 2
START:   ' Jump to label 2 (LABEL_2) because INDEX = 2
         ON INDEX GOTO LABEL_0, LABEL_1, LABEL_2

LABEL_0: INDEX = 2                        ' INDEX now equals 2
         PRINT AT 1,1,"LABEL 0"           ' Display the LABEL name on the LCD
         DELAYMS 500                      ' Wait 500ms
         GOTO START                       ' Jump back to START
LABEL_1: INDEX = 0                        ' INDEX now equals 0
         PRINT AT 1,1,"LABEL 1"           ' Display the LABEL name on the LCD
         DELAYMS 500                      ' Wait 500ms
         GOTO START                       ' Jump back to START
LABEL_2: INDEX = 1                        ' INDEX now equals 1
         PRINT AT 1,1,"LABEL 2"           ' Display the LABEL name on the LCD
         DELAYMS 500                      ' Wait 500ms
         GOTO START                       ' Jump back to START
```

The above example we first assign the index variable a value of 2, then we define our labels. Since the first position is considered 0 and the variable INDEX equals 2 the **ON GOTO** command will cause the program to jump to the third label in the list, which is LABEL_2.

Notes
ON GOTO is useful when you want to organise a structure such as: -

```
IF VAR1 = 0 THEN GOTO LABEL_0      ' VAR1 = 0: go to label "LABEL_0"
IF VAR1 = 1 THEN GOTO LABEL_1      ' VAR1 = 1: go to label "LABEL_1"
IF VAR1 = 2 THEN GOTO LABEL_2      ' VAR1 = 2: go to label "LABEL_2"
```

You can use **ON GOTO** to organise this into a single statement: -

```
ON VAR1 GOTO LABEL_0 , LABEL_1, LABEL_2
```

This works exactly the same as the above **IF**...**THEN** example. If the value is not in range (in this case if VAR1 is greater than 2), **ON GOTO** does nothing. The program continues with the next instruction.

The **ON GOTO** command is primarily for use with PICmicro^{tm} devices that have one page of memory (0-2047). If larger PICmicros are used and you suspect that the branch label will be over a page boundary, use the **ON GOTOL** command instead.

See also : **BRANCH, BRANCHL, ON GOTOL, ON GOSUB.**

ON GOTOL

Syntax
ON *Index Variable* **GOTOL** *Label1* {,...*Labeln* }

Overview
Cause the program to jump to different locations based on a variable index. On a PICmicro^{tm} device with more than one page of memory, or 16-bit core devices. Exactly the same functionality as **BRANCHL**.

Operators
Index Variable is a constant, variable, or expression, that specifies the label to jump to.
Label1...***Labeln*** are valid labels that specify where to branch to. A maximum of 127 labels may be placed after the **GOTOL**, 256 if using a 16-bit core device.

Example

```
        DEVICE = 16F877                 ' Use a larger PICmicro device
        DIM INDEX as BYTE

        CLS                             ' Clear the LCD
        INDEX = 2                       ' Assign INDEX a value of 2
START:  ' Jump to label 2 (LABEL_2) because INDEX = 2
        ON INDEX GOTOL LABEL_0, LABEL_1, LABEL_2

LABEL_0: INDEX = 2                      ' INDEX now equals 2
        PRINT AT 1,1,"LABEL 0"          ' Display the LABEL name on the LCD
        DELAYMS 500                     ' Wait 500ms
        GOTO START                      ' Jump back to START
LABEL_1: INDEX = 0                      ' INDEX now equals 0
        PRINT AT 1,1,"LABEL 1"          ' Display the LABEL name on the LCD
        DELAYMS 500                     ' Wait 500ms
        GOTO START                      ' Jump back to START
LABEL_2: INDEX = 1                      ' INDEX now equals 1
        PRINT AT 1,1,"LABEL 2"          ' Display the LABEL name on the LCD
        DELAYMS 500                     ' Wait 500ms
        GOTO START                      ' Jump back to START
```

The above example we first assign the index variable a value of 2, then we define our labels. Since the first position is considered 0 and the variable INDEX equals 2 the **ON GOTOL** command will cause the program to jump to the third label in the list, which is LABEL_2.

Notes
The **ON GOTOL** command is mainly for use with PICmicro^{tm} devices that have more than one page of memory (greater than 2048). It may also be used on any PICmicro^{tm} device, but does produce code that is larger than **ON GOTO**.

See also : BRANCH, BRANCHL, ON GOTO, ON GOSUB .

ON GOSUB

Syntax
ON *Index Variable* **GOSUB** *Label1* {,...*Labeln* }

Overview
Cause the program to Call a subroutine based on an index value. A subsequent **RETURN** will continue the program immediately following the **ON GOSUB** command.

Operators
Index Variable is a constant, variable, or expression, that specifies the label to call.
Label1...***Labeln*** are valid labels that specify where to call. A maximum of 256 labels may be placed after the **GOSUB**.

Example

```
        DEVICE = 18F452                  ' Use a 16-bit core PICmicro
        DIM INDEX as BYTE

        CLS                              ' Clear the LCD
        WHILE 1 = 1                      ' Create an infinite loop
        FOR INDEX = 0 TO 2                       ' Create a loop to call all the labels
        ' Call the label depending on the value of INDEX
        ON INDEX GOSUB LABEL_0, LABEL_1, LABEL_2
        DELAYMS 500                      ' Wait 500ms after the subroutine has returned
        NEXT
        WEND                             ' Do it forever
LABEL_0:
        PRINT AT 1,1,"LABEL 0"           ' Display the LABEL name on the LCD
        RETURN
LABEL_1:
        PRINT AT 1,1,"LABEL 1"           ' Display the LABEL name on the LCD
        RETURN
LABEL_2:
        PRINT AT 1,1,"LABEL 2"           ' Display the LABEL name on the LCD
        RETURN
```

The above example, a loop is formed that will load the variable INDEX with values 0 to 2. The **ON GOSUB** command will then use that value to call each subroutine in turn. Each subroutine will **RETURN** to the **DELAYMS** command, ready for the next scan of the loop.

Notes

ON GOSUB is useful when you want to organise a structure such as: -

```
IF VAR1 = 0 THEN GOSUB LABEL_0    ' VAR1 = 0: call label "LABEL_0"
IF VAR1 = 1 THEN GOSUB LABEL_1    ' VAR1 = 1: call label "LABEL_1"
IF VAR1 = 2 THEN GOSUB LABEL_2    ' VAR1 = 2: call label "LABEL_2"
```

You can use **ON GOSUB** to organise this into a single statement: -

```
ON VAR1 GOSUB LABEL_0 , LABEL_1, LABEL_2
```

This works exactly the same as the above **IF**...**THEN** example. If the value is not in range (in this case if VAR1 is greater than 2), **ON GOSUB** does nothing. The program continues with the next instruction..

ON GOSUB is only supported with 16-bit core devices because they are the only PICmicro^{tm} devices that allow code access to their return stack, which is required for the computed **RETURN** address.

See also : BRANCH, BRANCHL, ON GOTO, ON GOTOL.

ON_INTERRUPT

Syntax
ON_INTERRUPT *Label*

Overview
Jump to a subroutine when a HARDWARE interrupt occurs

Operators
Label is a valid identifier

Example

```
        ' Flash an LED attached to PORTB.0 at a different rate to the
        ' LED attached to PORTB.1

        DEVICE 16F84
        ON_INTERRUPT Flash
        ' Assign some Interrupt associated aliases
        SYMBOL T0IE INTCON.5            ' TMR0 Overflow Interrupt Enable
        SYMBOL T0IF INTCON.2            ' TMR0 Overflow Interrupt Flag
        SYMBOL GIE INTCON.7             ' Global Interrupt Enable
        SYMBOL PS0 OPTION_REG.0         ' Prescaler ratio bit-0
        SYMBOL PS1 OPTION_REG.1         ' Prescaler ratio bit-1
        SYMBOL PS2 OPTION_REG.2         ' Prescaler ratio bit-2
        ' Prescaler Assignment (1=assigned to WDT 0=assigned to oscillator)
        SYMBOL PSA OPTION_REG.3
        ' Timer0 Clock Source Select (0=Internal clock 1=External PORTA.4)
        SYMBOL T0CS OPTION_REG.5
        SYMBOL LED PORTB.1

        GOTO Over_interrupt             ' Jump over the interrupt subroutine

        ' Interrupt routine starts here
Flash:
        ' XOR PORTB with 1, Which will turn on with one interrupt
        ' and turn off with the next the LED connected to PORTB.0
        PORTB = PORTB ^ 1
        T0IF = 0                  ' Clear the TMR0 overflow flag
        CONTEXT RESTORE           ' Restore the registers and exit the interrupt

Over_interrupt :
        TRISB = %00000000         ' Configure PORTB as outputs
        PORTB = 0                 ' Clear PORTB
        ' Initiate the interrupt
        GIE = 0                   ' Turn off global interrupts
        PSA = 0                   ' Assign the prescaler to external oscillator
        PS0 = 1                   ' Set the prescaler
        PS1 = 1                   ' to increment TMR0
        PS2 = 1                   ' every 256th instruction cycle
        T0CS = 0                  ' Assign TMR0 clock to internal source
        TMR0 = 0                  ' Clear TMR0 initially
        T0IE = 1                  ' Enable TMR0 overflow interrupt
        GIE = 1                   ' Enable global interrupts
```

```
Inf:
        LOW LED
        DELAYMS 500
        HIGH LED
        DELAYMS 500
        GOTO Inf
```

Initiating an interrupt.

Before we can change any bits that correspond to interrupts we need to make sure that global interrupts are disabled. This is done by clearing the GIE bit of INTCON (*INTCON.7*).

```
        GIE = 0                 ' Disable global interrupts
```

The prescaler attachment to TMR0 is controlled by bits 0:2 of the OPTION_REG (*PS0, 1, 2*). The table below shows their relationship to the prescaled ratio applied. But before the prescaler can be calculated we must inform the PICmicro^{tm} as to what clock governs TMR0. This is done by setting or clearing the PSA bit of OPTION_REG (*OPTION_REG.3*). If PSA is cleared then TMR0 is attached to the external crystal oscillator. If it is set then it is attached to the watchdog timer, which uses the internal RC oscillator. This is important to remember; as the prescale ratio differs according to which oscillator it is attached to.

PS2	PS1	PS0	PSA=0 (External crystal OSC)	PSA=1 (Internal WDT OSC)
0	0	0	1 : 2	1 : 1
0	0	1	1 : 4	1 : 2
0	1	0	1 : 8	1 : 4
0	1	1	1 : 16	1 : 8
1	0	0	1 : 32	1 : 16
1	0	1	1 : 64	1 : 32
1	1	0	1 : 128	1 : 64
1	1	1	1 : 256	1 : 128

TMR0 prescaler ratio configurations.

As can be seen from the above table, if we require TMR0 to increment on every instruction cycle (*4/OSC*) we must clear PS2..0 and set PSA, which would attach it to the watchdog timer. This will cause an interrupt to occur every 256us *(assuming a 4MHz crystal)*. If the same values were placed into PS2..0 and PSA was cleared (*attached to the external oscillator*) then TMR0 would increment on every 2nd instruction cycle and cause an interrupt to occur every 512us.

There is however, another way TMR0 may be incremented. By setting the T0CS bit of the OPTION_REG (*OPTION_REG.5*) a rising or falling transition on PORTA.0 will also increment TMR0. Setting T0CS will attach TMR0 to PORTA.0 and clearing TOCS will attach it to the oscillators. If PORTA.0 is chosen then an associated bit, T0SE (*OPTION_REG.4*) must be set or cleared. Clearing T0SE will increment TMR0 with a low to high transition, while setting T0SE will increment TMR0 with a high to low transition.

The prescaler's ratio is still valid when PORTA.0 is chosen as the source, so that every nth transition on PORTA.0 will increment TMR0. Where *n* is the prescaler ratio.

Before the interrupt is enabled, TMR0 itself should be assigned a value, as any variable should be when first starting a program. In most cases clearing TMR0 will suffice. This is necessary because, when the PICmicro^{tm} is first powered up the value of TMR0 could be anything from 0 to 255

We are now ready to allow TMR0 to trigger an interrupt. This is accomplished by setting the T0IE bit of INTCON (*INTCON.5*). Setting this bit will not cause a global interrupt to occur just yet, but will inform the PICmicro^{tm} that when global interrupts are enabled, TMR0 will be one possible cause. When TMR0 overflows (*rolls over from 255 to 0*) the T0IF (*INTCON.2*) flag is set. This is not important yet but will become crucial in the interrupt handler subroutine.

The final act is to enable global interrupts by setting the GIE bit of the INTCON register (*INTCON.7*).

Format of the interrupt handler.

The interrupt handler subroutine must always follow a fixed pattern. First, the contents of the STATUS, PCLATH, FSR, and Working register (WREG) must be saved, this is termed *context saving*, and is performed automatically by the compiler, and variable space is automatically allocated for the registers in the shared portion of memory located at the top of BANK 0.

When the interrupt handler was called the GIE bit was automatically cleared by hardware, disabling any more interrupts. If this were not the case, another interrupt might occur while the interrupt handler was processing the first one, which would lead to disaster.

Now the T0IF (*TMR0 overflow*) flag becomes important. Because, before exiting the interrupt handler it must be cleared to signal that we have finished with the interrupt and are ready for another one.

```
    T0IF = 0            ' Clear the TMR0 overflow flag
```

The STATUS, PCLATH, FSR, and Working register (WREG) must be returned to their original conditions (*context restoring*). The **CONTEXT RESTORE** command may be used for this. i.e. **CONTEXT RESTORE.** The **CONTEXT RESTORE** command also returns the PICmicro^{tm} back to the main body code where the interrupt was called from. In other words it performs a **RETFIE** instruction

Precautions.

Because a hardware interrupt may occur at any time, It cannot be fully guaranteed that a SYSTEM variable will not be disturbed while inside the interrupt handler, therefore, the safest way to use a HARDWARE interrupt is to write the code in assembler, or to implement a SOFTWARE interrupt using the ON INTERRUPT directive. This will guarantee that no system variables are being altered.

The code within the interrupt handler should be as quick and efficient as possible because, while it's processing the code the main program is halted. When using assembler interrupts, care should be taken to ensure that the watchdog timer does not *time-out*. Placing a **CLRWDT** instruction at regular intervals within the code will prevent this from happening. An alternative approach would be to disable the watchdog timer altogether at programming time.

See also : ON_LOW_INTERRUPT, SOFTWARE INTERRUPTS in BASIC.

ON_LOW_INTERRUPT

Syntax
ON_LOW_INTERRUPT *Label*

Overview
Jump to a subroutine when a LOW PRIORITY HARDWARE interrupt occurs on a 16-bit core device.

Operators
Label is a valid identifier

Example
' This program uses TIMER1 and TIMER3 to demonstrate the use of interrupt priority.
' TIMER1 is configured for high-priority interrupts and TIMER3 is configured for low-priority interrupts.
' By writing to the PORTD LEDS, it is shown that a high-priority interrupts override low-priority interrupts.

' Connect three LEDs to PORTD pins 0,1, and 7
' LEDs 0, 7 flash in the background using interrupts, while the LED connected to PORTD.1
' Flashes slowly in the foreground

' Note the use of assembler commands without the ASM-ENDASM directives

```
DEVICE = 18F452
XTAL = 4
' Create a WORD variable from two hardware registers
SYMBOL TIMER1 = TMR1L.WORD
' Create a WORD variable from two hardware registers
SYMBOL TIMER3 = TMR3L.WORD
SYMBOL IPEN = RCON.7
SYMBOL TMR1IP = IPR1.0
SYMBOL TMR3IP = IPR2.1
SYMBOL TMR1IF = PIR1.0
SYMBOL TMR3IF = PIR2.1
SYMBOL TMR1IE = PIE1.0
SYMBOL TMR3IE = PIE2.1
SYMBOL GIEH = INTCON.7
SYMBOL GIEL = INTCON.6
SYMBOL TMR1ON = T1CON.0
SYMBOL TMR3ON = T3CON.0

' Declare interrupt Vectors
' Point to the HIGH priority interrupt subroutine
ON_INTERRUPT GOTO TMR1_ISR
' Point to the LOW priority interrupt subroutine
ON_LOW_INTERRUPT GOTO TMR3_ISR

GOTO OVER_INTERRUPTS                ' Jump over the interrupt subroutines
'------------------------------------------------------------------------
```

```
        ' HIGH PRIORITY INTERRUPT
        TMR1_ISR:
        CLEAR TMR1IF      ' Clear the Timer1 interrupt flag.
        ' Turn off PORTB.0 to indicate high priority interrupt has overridden low priority.
        CLEAR PORTD.0
        SET PORTD.7       ' Turn on PORTB.7 to indicate high priority interrupt is occurring.
        BTFSS TMR1IF      ' Poll TMR11 interrupt flag to wait for another TMR1 overflow.
        BRA $ - 2
        CLEAR TMR1IF      ' Clear the Timer1 interrupt flag again.
        CLEAR PORTD.7     ' Turn off PORTB.7 to indicate the high-priority ISR is over.
        RETFIE
'----------------------------------------------------------------------------
' LOW PRIORITY INTERRUPT
TMR3_ISR:
        CLEAR TMR3IF      ' Clear the TMR3 interrupt flag.
        TIMER3 = $F000    ' Load TMR3 with the value $F000
        SET PORTD.0       ' Turn on PORTB.0 to indicate low priority interrupt is occurring.
        BTFSS TMR3IF      ' Poll TMR3 interrupt flag to wait for another TMR3 overflow.
        BRA $ - 2
        TIMER3 = $F000    ' Load TMR3 with the value $F000 again.
        CLEAR TMR3IF      ' Clear the Timer3 interrupt flag again.
        CLEAR PORTD.0     ' Turn off PORTB.0. to indicate the low-priority ISR is over.
        RETFIE
'----------------------------------------------------------------------------
' MAIN PROGRAM STARTS HERE
OVER_INTERRUPTS:
        LOW  PORTD                ' Setup PORTB for outputs
'Set up priority interrupts.
        IPEN = 1                  ' Enable priority interrupts.
        TMR1IP = 1                ' Set Timer1 as a high priority interrupt source
        TMR3IP = 0                ' Set Timer3 as a low priority interrupt source
        TMR1IF = 0                ' Clear the Timer1 interrupt flag
        TMR3IF = 0                ' Clear the Timer3 interrupt flag
        TMR1IE = 1                ' Enable Timer1 interrupts
        TMR3IE = 1                ' Enable Timer3 interrupts
        GIEH = 1                  ' Set the global interrupt enable bits
        GIEL = 1
'TIMER1 setup
        T1CON = 0
        TIMER1 = 0                ' Clear TIMER 1
        TMR1ON = 1                ' Turn on Timer1
'TIMER3 setup
        T3CON = 0
        TIMER3 = $F000            ' Write $F000 to Timer3
        TMR3ON = 1                ' Turn on Timer3
        WHILE 1 = 1               ' Flash the LED on PORTB.1
        HIGH PORTD.1
        DELAYMS 300
        LOW PORTD.1
        DELAYMS 300
        WEND
```

See also : ON_INTERRUPT, SOFTWARE INTERRUPTS in BASIC).

OUTPUT

Syntax
OUTPUT *Port or Port* ***.*** *Pin*

Overview
Makes the specified *Port* or *Port.Pin* an output.

Operators
Port.Pin must be a Port.Pin constant declaration.

Example

```
OUTPUT PORTA.0          ' Make bit-0 of PORTA an output
OUTPUT PORTA            ' Make all of PORTA an output
```

Notes
An Alternative method for making a particular pin an output is by directly modifying the TRIS: -

```
TRISB.0 = 0             ' Set PORTB, bit-0 to an output
```

All of the pins on a port may be set to output by setting the whole TRIS register at once: -

```
TRISB = %00000000       ' Set all of PORTB to outputs
```

In the above examples, setting a TRIS bit to 0 makes the pin an output, and conversely, setting the bit to 1 makes the pin an input.

See also : **INPUT.**

ORG

Syntax

ORG *Value*

Overview

Set the program origin for subsequent code at the address defined in *Value*

Operators

Value can be any constant value within the range of the particular PICmicro's memory.

Example

```
        DEVICE 16F877

        ORG 2000                        ' Set the origin to address 2000
        CDATA 120 , 243 , "Hello"       ' Place data starting at address 2000
```

or

```
        SYMBOL Address = 2000

        ORG Address + 1                 ' Set the origin to address 2001
        CDATA 120 , 243 , "Hello"       ' Place data starting at address 2001
```

Notes

If more complex values are required after the **ORG** directive, such as assembler variables etc. Use : -

```
        @ ORG { assembler variables etc }
```

OREAD

Syntax
OREAD *Pin* , *Mode* , **[** *Inputdata* **]**

Overview
Receive data from a device using the Dallas Semiconductor 1-wire protocol. The 1-wire protocol is a form of asynchronous serial communication developed by Dallas Semiconductor. It requires only one I/O pin which may be shared between multiple 1-wire devices.

Operators
Pin is a PORT-BIT combination that specifies which I/O pin to use. 1-wire devices require only one I/O pin (normally called DQ) to communicate. This I/O pin will be toggled between output and input mode during the **OREAD** command and will be set to input mode by the end of the **OREAD** command.
Mode is a numeric constant (0 - 7) indicating the mode of data transfer. The Mode argument control's the placement of reset pulses and detection of presence pulses, as well as byte or bit input. See notes below.
Inputdata is a list of variables or arrays to store the incoming data into.

Example

```
DIM Result AS BYTE
SYMBOL DQ = PORTA.0
OREAD DQ, 1 , [ Result ]
```

The above example code will transmit a 'reset' pulse to a 1-wire device (connected to bit 0 of PORTA) and will then detect the device's 'presence' pulse and receive one byte and store it in the variable Result.

Notes
The Mode operator is used to control placement of reset pulses (and detection of presence pulses) and to designate byte or bit input. The table below shows the meaning of each of the 8 possible value combinations for Mode.

Mode Value	Effect
0	No Reset, Byte mode
1	Reset before data, Byte mode
2	Reset after data, Byte mode
3	Reset before and after data, Byte mode
4	No Reset, Bit mode
5	Reset before data, Bit mode
6	Reset after data, Bit mode
7	Reset before and after data, Bit mode

The correct value for Mode depends on the 1-wire device and the portion of the communication that is being dealt with. Consult the data sheet for the device in question to determine the correct value for Mode. In many cases, however, when using the **OREAD** command, Mode should be set for either No Reset (to receive data from a transaction already started by an **OWRITE** command) or a Reset after data (to terminate the session after data is received). However, this may vary due to device and application requirements.

When using the Bit (rather than Byte) mode of data transfer, all variables in the InputData argument will only receive one bit. For example, the following code could be used to receive two bits using this mode: -

```
DIM BitVar1 AS BIT
DIM BitVar2 AS BIT
OREAD PORTA.0 , 6 , [ BitVar1, BitVar2 ]
```

In the example code shown, a value of 6 was chosen for Mode. This sets Bit transfer and Reset after data mode.

We could also have chosen to make the BitVar1 and BitVar2 variables each a BYTE type, however, they would still only have received one bit each in the **OREAD** command, due to the Mode that was chosen.

The compiler also has a modifier for handling a string of data, named **STR**.

The **STR** modifier is used for receiving data and placing it directly into a byte array variable.

A string is a set of bytes that are arranged or accessed in a certain order. The values 1, 2, 3 would be stored in a string with the value 1 first, followed by 2 then followed by the value 3. A byte array is a similar concept to a string; it contains data that is arranged in a certain order. Each of the elements in an array is the same size. The string 1 2 3 would be stored in a byte array containing three bytes (elements).

Below is an example that receives ten bytes through a 1-wire interface and stores them in the 10-byte array, MYARRAY: -

```
    DIM MyArray[10] AS BYTE              ' Create a 10-byte array.
    OREAD DQ, 1 , [STR MyArray]
    PRINT DEC STR MyArray                ' Display the values.
```

If the amount of received characters is not enough to fill the entire array, then a formatter may be placed after the array's name, which will only receive characters until the specified length is reached. For example: -

```
    DIM MyArray[10] AS BYTE              ' Create a 10-byte array.
    OREAD DQ, 1 , [ STR MyArray \5 ]     ' Fill the first 5-bytes of the array with
                                         ' received data.
    PRINT STR MyArray \5                 ' Display the 5-value string.
```

The example above illustrates how to fill only the first n bytes of an array, and then how to display only the first n bytes of the array. n refers to the value placed after the backslash.

DALLAS 1-Wire Protocol.

The 1-wire protocol has a well defined standard for transaction sequences. Every transaction sequence consists of four parts: -

Initialisation.
ROM Function Command.
Memory Function Command.
Transaction / Data.

Additionally, the ROM Function Command and Memory Function Command are always 8 bits wide and are sent least-significant-bit first (LSB).

The Initialisation consists of a reset pulse (generated by the master) that is followed by a presence pulse (generated by all slave devices).

The reset pulse is controlled by the lowest two bits of the Mode argument in the OREAD command. It can be made to appear before the ROM Function Command (Mode = 1), after the Transaction / Data portion (Mode = 2), before and after the entire transaction (Mode = 3) or not at all (Mode = 0).

Command	Value	Action
Read ROM	$33	Reads the 64-bit ID of the 1-wire device. This command can only be used if there is a single 1-wire device on the line.
Match ROM	$55	This command, followed by a 64-bit ID, allows the PICmicro to address a specific 1-wire device.
Skip ROM	$CC	Address a 1-wire device without its 64-bit ID. This command can only be used if there is a single 1-wire device on the line.
Search ROM	$F0	Reads the 64-bit IDs of all the 1-wire devices on the line. A process of elimination is used to distinguish each unique device.

Following the Initialisation, comes the ROM Function Command. The ROM Function Command is used to address the desired 1-wire device. The above table shows a few common ROM Function Commands. If only a single 1 wire device is connected, the Match ROM command can be used to address it. If more than one 1-wire device is attached, the PICmicro^{tm} will ultimately have to address them individually using the Match ROM command.

The third part, the Memory Function Command, allows the PICmicro^{tm} to address specific memory locations, or features, of the 1-wire device. Refer to the 1-wire device's data sheet for a list of the available Memory Function Commands.

Finally, the Transaction / Data section is used to read or write data to the 1-wire device. The **OREAD** command will read data at this point in the transaction. A read is accomplished by generating a brief low-pulse and sampling the line within 15us of the falling edge of the pulse. This is called a 'Read Slot'.

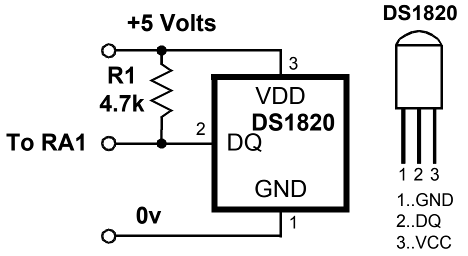

The following program demonstrates interfacing to a Dallas Semiconductor DS1820 1-wire digital thermometer device using the compiler's 1-wire commands, and connections as per the diagram to the right.

The code reads the Counts Remaining and Counts per Degree Centigrade registers within the DS1820 device in order to provide a more accurate temperature (down to 1/10th of a degree).

```
DEVICE 16F84
DECLARE XTAL 4
SYMBOL DQ = PortA.1                 ' Place the DS1820 on bit-1 of PORTA
DIM Temp AS WORD                    ' Holds the temperature value
DIM C AS BYTE                       ' Holds the counts remaining value
DIM CPerD AS BYTE                   ' Holds the Counts per degree C value
CLS                                 ' Clear the LCD before we start
Again:
OWRITE DQ, 1, [$CC, $44]            ' Send Calculate Temperature command
REPEAT
DELAYMS 25                          ' Wait until conversion is complete
OREAD DQ, 4, [C]                    ' Keep reading low pulses until
UNTIL C <> 0                        ' the DS1820 is finished.
OWRITE DQ, 1, [$CC, $BE]            ' Send Read ScratchPad command
OREAD DQ, 2,[Temp.LOWBYTE,Temp.HIGHBYTE, C, C, C, C, C, CPerD]
' Calculate the temperature in degrees Centigrade
Temp = (((Temp >> 1) * 100) - 25) + (((CPerD - C) * 100) / CPerD)
PRINT AT 1,1, DEC Temp / 100, ".", DEC2 Temp," ", AT 1,8,"C"
GOTO Again
```

Note. The equation used in the program above will not work correctly with negative temperatures. Also note that the 4.7kΩ pull-up resistor (R1) is required for correct operation.

Inline OREAD Command.
The standard structure of the **OREAD** command is: -

OREAD Pin , Mode , [Inputdata]

However, this did not allow it to be used in conditions such as **IF-THEN**, **WHILE-WEND** etc. Therefore, there is now an additional structure to the **OREAD** command: -

Var = **OREAD** Pin , Mode

Operands Pin and Mode have not changed their function, but the result from the 1-wire read is now placed directly into the assignment variable.

OREAD - OWRITE Presence Detection.

Another important feature to both the **OREAD** and **OWRITE** commands is the ability to jump to a section of the program if a presence is not detected on the 1-wire bus.

```
OWRITE Pin , Mode , Label , [ Outputdata ]

OREAD Pin , Mode , Label , [ Inputdata ]

Var = OREAD Pin , Mode, Label
```

The LABEL operand is an optional condition, but if used, it must reference a valid BASIC label.

```
        ' Skip ROM search & do temp conversion
        OWRITE  DQ, 1, NO_PRES, [$CC, $44]
        WHILE OREAD DQ, 4, NO_PRES != 0 : WEND ' Read busy-bit,' Still busy..?
        ' Skip ROM search & read scratchpad memory
        OWRITE  DQ, 1, NO_PRES, [$CC, $BE]
        OREAD  DQ, 2, NO_PRES, [Temp.Lowbyte, Temp.Highbyte] ' Read two bytes
        RETURN

NO_PRES:
        PRINT "No Presence"
        STOP
```

See also : **OWRITE.**

OWRITE

Syntax
OWRITE *Pin* , *Mode* , **[** *Outputdata* **]**

Overview
Send data to a device using the Dallas Semiconductor 1-wire protocol. The 1-wire protocol is a form of asynchronous serial communication developed by Dallas Semiconductor. It requires only one I/O pin which may be shared between multiple 1-wire d vices.

Operators
Pin is a PORT-BIT combination that specifies which I/O pin to use. 1-wire devices require only one I/O pin (normally called DQ) to communicate. This I/O pin will be toggled between output and input mode during the OWRITE command and will be set to input mode by the end of the OWRITE command.
Mode is a numeric constant (0 - 7) indicating the mode of data transfer. The Mode operator control's the placement of reset pulses and detection of presence pulses, as well as byte or bit input. See notes below.
Outputdata is a list of variables or arrays transmit individual or repeating bytes.

Example

```
SYMBOL DQ = PORTA.0
OWRITE DQ, 1 , [ $4E ]
```

The above example will transmit a 'reset' pulse to a 1-wire device (connected to bit 0 of PORTA) and will then detect the device's 'presence' pulse and transmit one byte (the value $4E).

Notes
The Mode operator is used to control placement of reset pulses (and detection of presence pulses) and to designate byte or bit input. The table below shows the meaning of each of the 8 possible value combinations for Mode.

Mode Value	Effect
0	No Reset, Byte mode
1	Reset before data, Byte mode
2	Reset after data, Byte mode
3	Reset before and after data, Byte mode
4	No Reset, Bit mode
5	Reset before data, Bit mode
6	Reset after data, Bit mode
7	Reset before and after data, Bit mode

The correct value for Mode depends on the 1-wire device and the portion of the communication you're dealing with. Consult the data sheet for the device in question to determine the correct value for Mode. In many cases, however, when using the **OWRITE** command, Mode should be set for a Reset before data (to initialise the transaction). However, this may vary due to device and application requirements.

When using the Bit (rather than Byte) mode of data transfer, all variables in the InputData argument will only receive one bit. For example, the following code could be used to receive two bits using this mode: -

```
DIM BitVar1 AS BIT
DIM BitVar2 AS BIT
OWRITE PORTA.0 , 6 , [ BitVar1, BitVar2 ]
```

In the example code shown, a value of 6 was chosen for Mode. This sets Bit transfer and Reset after data mode. We could also have chosen to make the BitVar1 and BitVar2 variables each a BYTE type, however, they would still only use their lowest bit (BIT0) as the value to transmit in the **OWRITE** command, due to the Mode value chosen.

The STR Modifier

The **STR** modifier is used for transmitting a string of bytes from a byte array variable. A string is a set of bytes sized values that are arranged or accessed in a certain order. The values 1, 2, 3 would be stored in a string with the value 1 first, followed by 2 then followed by the value 3. A byte array is a similar concept to a string; it contains data that is arranged in a certain order. Each of the elements in an array is the same size. The string 1,2,3 would be stored in a byte array containing three bytes (elements).

Below is an example that sends four bytes (from a byte array) through bit-0 of PORTA: -

```
DIM MyArray[10] AS BYTE                ' Create a 10-byte array.
MyArray [0] = $CC                      ' Load the first 4 bytes of the array
MyArray [1] = $44                      ' With the data to send
MyArray [2] = $CC
MyArray [3] = $4E
OWRITE PORTA.0 , 1 , [ STR MyArray \4 ]   ' Send 4-byte string.
```

Note that we use the optional \n argument of **STR**. If we didn't specify this, the PICmicro^{tm} would try to keep sending characters until all 10 bytes of the array were transmitted. Since we do not wish all 10 bytes to be transmitted, we chose to tell it explicitly to only send the first 4 bytes.

The above example may also be written as: -

```
DIM MyArray [10] AS BYTE               ' Create a 10-byte array.
STR MyArray = $CC,$44,$CC,$4E          ' Load the first 4 bytes of the array
OWRITE PORTA.0 , 1 , [ STR MyArray \4 ]   ' Send 4-byte string.
```

The above example, has exactly the same function as the previous one. The only difference is that the string is now constructed using the **STR** as a command instead of a modifier.

See also : OREAD for example code, and 1-wire protocol.

PEEK

Syntax
Variable **= PEEK** *Address*

Overview
Retrieve the value of a register and place into a variable

Operators
Variable is a user defined variable.
Address can be a constant or a variable, pointing to the address of a register.

Example 1

```
A = PEEK 15
```

Variable A will contain the value of Register 15. If the device is a 16F84, for example, this register is one of the 68 general-purpose registers (RAM).

Example 2

```
B = 15
A = PEEK B
```

Same function as example 1

Notes
Use of the **PEEK** command is not recommended. A more efficient way of retrieving the value from a register is by accessing the register directly: -

```
VARIABLE = REGISTER
```

See also : **POKE.**

PIXEL

Syntax
Variable **= PIXEL** *Ypos* , *Xpos*

Overview
Read the condition of an individual pixel on a 64x128 element graphic LCD. The returned value will be 1 if the pixel is set, and 0 if the pixel is clear.

Operators
Variable is a user defined variable.
Xpos can be a constant, variable, or expression, pointing to the X-axis location of the pixel to examine. This must be a value of 0 to 127. Where 0 is the far left row of pixels.
Ypos can be a constant, variable, or expression, pointing to the Y-axis location of the pixel to examine. This must be a value of 0 to 63. Where 0 is the top column of pixels.

Example

```
DEVICE 16F877
LCD_TYPE = GRAPHIC            ' Use a Graphic LCD
INTERNAL_FONT = OFF           ' Use an external chr set
FONT_ADDR = 0                 ' Eeprom's address is 0

' Graphic LCD Pin Assignments
LCD_DTPORT = PORTD
LCD_RSPIN = PORTC.2
LCD_RWPIN = PORTE.0
LCD_ENPIN = PORTC.5
LCD_CS1PIN = PORTE.1
LCD_CS2PIN = PORTE.2

' Character set eeprom Pin Assignments
SDA_PIN = PORTC.4
SCL_PIN = PORTC.3

DIM XPOS AS BYTE
DIM Ypos AS BYTE
DIM Result AS BYTE

CLS
PRINT AT 0 , 0 , "TESTING 1-2-3"
' Read the top row and display the result
FOR XPOS = 0 TO 127
Result = PIXEL 0 , XPOS       ' Read the top row
PRINT AT 1 , 0 , DEC Result
DELAYMS 400
NEXT
STOP
```

See also : **LCDREAD, LCDWRITE, PLOT, UNPLOT. See PRINT for circuit.**

PLOT

Syntax
PLOT *Ypos* , *Xpos*

Overview
Set an individual pixel on a 64x128 element graphic LCD.

Operators
Xpos can be a constant, variable, or expression, pointing to the X-axis location of the pixel to set. This must be a value of 0 to 127. Where 0 is the far left row of pixels.
Ypos can be a constant, variable, or expression, pointing to the Y-axis location of the pixel to set. This must be a value of 0 to 63. Where 0 is the top column of pixels.

Example

```
        DEVICE 16F877
        LCD_TYPE = GRAPHIC              ' Use a Graphic LCD

        ' Graphic LCD Pin Assignments
        LCD_DTPORT = PORTD
        LCD_RSPIN = PORTC.2
        LCD_RWPIN = PORTE.0
        LCD_ENPIN = PORTC.5
        LCD_CS1PIN = PORTE.1
        LCD_CS2PIN = PORTE.2

        DIM XPOS AS BYTE
        ADCON1 = 7                      ' Set PORTA and PORTE to all digital
        ' Draw a line across the LCD
Again:
        FOR XPOS = 0 TO 127
                PLOT 20 , Xpos
                DELAYMS 10
        NEXT
        ' Now erase the line
        FOR XPOS = 0 TO 127
                UNPLOT 20 , XPOS
                DELAYMS 10
        NEXT
        GOTO Again
```

See also : LCDREAD, LCDWRITE, PIXEL, UNPLOT. See PRINT for circuit.

Graphic LCD pixel configuration.

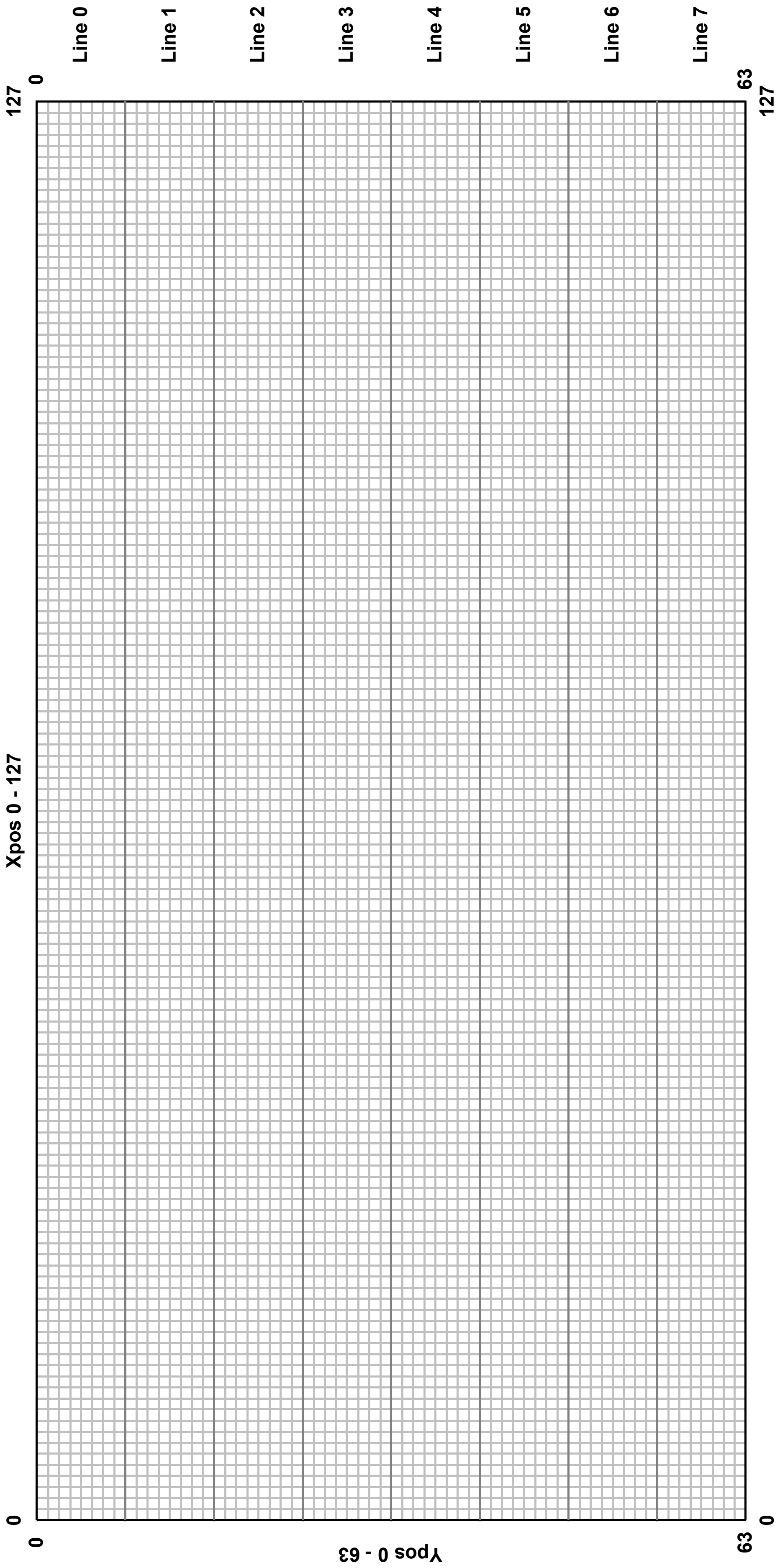
Line 0
Line 1
Line 2
Line 3
Line 4
Line 5
Line 6
Line 7
0
63
127
127
Xpos 0 - 127
0
0
0
63
Ypos 0 - 63

POKE

Syntax

POKE *Address* , *Variable*

Overview

Assign a value to a register.

Operators

Address can be a constant or a variable, pointing to the address of a register.
Variable can be a constant or a variable.

Example

```
A = 15
POKE 12 , A         ' Register 12 will be assigned the value 15.
POKE A , 0          ' Register 15 will be assigned the value 0
```

Notes

Use of the **POKE** command is not recommended. A more efficient way of assigning a value to a register is by accessing the register directly: -

```
REGISTER = VALUE
```

See also : **PEEK.**

POP

Syntax
POP *Variable*, {*Variable*, *Variable* etc}

Overview
Pull a single variable or multiple variables from a software stack.
If the **POP** command is issued without a following variable, it will implement the assembler mnemonic **POP**, which manipulates the PICmicro's call stack.

Operators
Variable is a user defined variable of type **BIT**, **BYTE**, **BYTE_ARRAY**, **WORD**, **WORD_ARRAY**, **DWORD**, **FLOAT**, or **STRING**.

The amount of bytes pushed on to the stack varies with the variable type used. The list below shows how many bytes are pushed for a particular variable type, and their order.

BIT	1 Byte is popped containing the value of the bit pushed.
BYTE	1 Byte is popped containing the value of the byte pushed.
BYTE_ARRAY	1 Byte is popped containing the value of the byte pushed.
WORD	2 Bytes are popped. Low Byte then High Byte containing the value of the word pushed.
WORD_ARRAY	2 Bytes are popped. Low Byte then High Byte containing the value of the word pushed.
DWORD	4 Bytes are popped. Low Byte, Mid1 Byte, Mid2 Byte then High Byte containing the value of the dword pushed.
FLOAT	4 Bytes are popped. Low Byte, Mid1 Byte, Mid2 Byte then High Byte containing the value of the float pushed.
STRING	2 Bytes are popped. Low Byte then High Byte that point to the start address of the string previously pushed.

Example 1
' Push two variables on to the stack then retrieve them

```
DEVICE = 18F452                 ' Stack only suitable for 16-bit core devices
STACK_SIZE = 20                 ' Create a small stack capable of holding 20 bytes

DIM WRD as WORD                 ' Create a WORD variable
DIM DWD as DWORD                ' Create a DWORD variable

WRD = 1234                      ' Load the WORD variable with a value
DWD = 567890                    ' Load the DWORD variable with a value
PUSH WRD , DWD                  ' Push the WORD variable then the DWORD variable

CLEAR WRD                       ' Clear the WORD variable
CLEAR DWD                       ' Clear the DWORD variable

POP DWD , WRD                   ' Pop the DWORD variable then the WORD variable
PRINT DEC WRD , "  " , DEC DWD        ' Display the variables as decimal
STOP
```

Example 2
' Push a STRING on to the stack then retrieve it

```
DEVICE = 18F452                    ' Stack only suitable for 16-bit core devices
STACK_SIZE = 10                    ' Create a small stack capable of holding 10 bytes

DIM SOURCE_STRING as STRING * 20          ' Create a STRING variable
DIM DEST_STRING as STRING * 20            ' Create another STRING variable

SOURCE_STRING = "HELLO WORLD"   ' Load the STRING variable with characters

PUSH SOURCE_STRING                    ' Push the STRING variable's address

POP DEST_STRING         ' Pop the previously pushed STRING into DEST_STRING
PRINT DEST_STRING       ' Display the string, which will be "HELLO WORLD"
STOP
```

Example 3
' Push a Quoted character string on to the stack then retrieve it

```
DEVICE = 18F452            ' Stack only suitable for 16-bit core devices
STACK_SIZE = 10            ' Create a small stack capable of holding 10 bytes

DIM DEST_STRING as STRING * 20     ' Create a STRING variable

PUSH "HELLO WORLD"             ' Push the Quoted String of Characters on to the stack

POP DEST_STRING         ' Pop the previously pushed STRING into DEST_STRING
PRINT DEST_STRING       ' Display the string, which will be "HELLO WORLD"
STOP
```

See also : **PUSH, GOSUB, RETURN, See PUSH for technical details of stack manipulation.**

POT

Syntax

Variable **= POT** *Pin* , *Scale*

Overview

Read a potentiometer, thermistor, photocell, or other variable resistance.

Operators

Variable is a user defined variable.
Pin is a Port.Pin constant that specifies the I/O pin to use.
Scale is a constant, variable, or expression, used to scale the instruction's internal 16-bit result. The 16- bit reading is multiplied by (scale/ 256), so a *scale* value of 128 would reduce the range by approximately 50%, a scale of 64 would reduce to 25%, and so on.

Example

```
        DIM VAR1 AS BYTE
Loop:
        VAR1 = POT PORTB.0 , 100      ' Read potentiometer on pin 0 of PORTB.
        PRINT DEC VAR1 , " "          ' Display the potentiometer reading
        GOTO Loop                     ' Repeat the process.
```

Notes

Internally, the **POT** instruction calculates a 16-bit value, which is scaled down to an 8-bit value. The amount by which the internal value must be scaled varies with the size of the resistor being used.

The pin specified by **POT** must be connected to one side of a resistor, whose other side is connected through a capacitor to ground. A resistance measurement is taken by timing how long it takes to discharge the capacitor through the resistor.

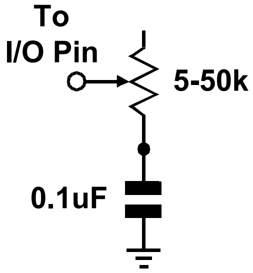

The value of *scale* must be determined by experimentation, however, this is easily accomplished as follows: -

Set the device under measure, the pot in this instance, to maximum resistance and read it with *scale* set to 255. The value returned in VAR1 can now be used as *scale*: -

```
        VAR1 = POT PORTB.0 , 255
```

See also : ADIN, RCIN.

PRINT

Syntax
PRINT *Item* { , *Item...* }

Overview
Send Text to an LCD module using the Hitachi 44780 controller or a graphic LCD based on the Samsung S6B0108 chipset.

Operators
Item may be a constant, variable, expression, modifier, or string list.
There are no operators as such, instead there are *modifiers*. For example, if an at sign'@' precedes an *Ite*m, the ASCII representation for each digit is sent to the LCD.

The modifiers are listed below: -

Modifier	Operation
AT ypos (1 to n),xpos(1 to n)	Position the cursor on the LCD
CLS	Clear the LCD (also creates a 30ms delay)
BIN{1..32}	Display binary digits
DEC{1..10}	Display decimal digits
HEX{1..8}	Display hexadecimal digits
SBIN{1..32}	Display signed binary digits
SDEC{1..10}	Display signed decimal digits
SHEX{1..8}	Display signed hexadecimal digits
IBIN{1..32}	Display binary digits with a preceding '%' identifier
IDEC{1..10}	Display decimal digits with a preceding '#' identifier
IHEX{1..8}	Display hexadecimal digits with a preceding '$' identifier
ISBIN{1..32}	Display signed binary digits with a preceding '%' identifier
ISDEC{1..10}	Display signed decimal digits with a preceding '#' identifier
ISHEX{1..8}	Display signed hexadecimal digits with a preceding '$' identifier
REP c\n	Display character c repeated n times
STR array\n	Display all or part of an array
CSTR cdata	Display string data defined in a CDATA statement.

The numbers after the **BIN**, **DEC**, and **HEX** modifiers are optional. If they are omitted, then the default is all the digits that make up the value will be displayed.

If a floating point variable is to be displayed, then the digits after the **DEC** modifier determine how many remainder digits are printed. i.e. numbers after the decimal point.

```
DIM FLT AS FLOAT
FLT = 3.145
PRINT DEC2 FLT            ' Display 2 values after the decimal point
```

The above program will display 3.14

If the digit after the **DEC** modifier is omitted, then 3 values will be displayed after the decimal point.

```
DIM FLT AS FLOAT
FLT = 3.1456
PRINT DEC FLT              ' Display 3 values after the decimal point
```

The above program will display 3.145

There is no need to use the **SDEC** modifier for signed floating point values, as the compiler's **DEC** modifier will automatically display a minus result: -

```
DIM FLT AS FLOAT
FLT = -3.1456
PRINT DEC FLT              ' Display 3 values after the decimal point
```

The above program will display -3.145

HEX or **BIN** modifiers cannot be used with floating point values or variables.

The Xpos and Ypos values in the **AT** modifier both start at 1. For example, to place the text "HELLO WORLD" on line 1, position 1, the code would be: -

```
PRINT AT 1 , 1 , "HELLO WORLD"
```

Example 1

```
DIM VAR1 AS BYTE
DIM WRD AS WORD
DIM DWD AS DWORD

PRINT "Hello World"          ' Display the text "Hello World"
PRINT "VAR1= " , DEC VAR1    ' Display the decimal value of VAR1
PRINT "VAR1= " , HEX VAR1    ' Display the hexadecimal value of VAR1
PRINT "VAR1= " , BIN VAR1    ' Display the binary value of VAR1
PRINT "VAR1= " , @VAR1       ' Display the decimal value of VAR1
PRINT "DWD= " , HEX6 DWD     ' Display 6 hex characters of a DWORD type variable
```

Example 2

```
' Display a negative value on the LCD.
SYMBOL NEGATIVE = -200
PRINT AT 1 , 1 , SDEC NEGATIVE
```

Example 3

```
' Display a negative value on the LCD with a preceding identifier.
PRINT AT 1 , 1 , ISHEX -$1234
```

Example 3 will produce the text "$-1234" on the LCD.

Some PICmicros such as the 16F87x, and 18FXXX range have the ability to read and write to their own flash memory. And although writing to this memory too many times is unhealthy for the PICmicro^{tm}, reading this memory is both fast, and harmless. Which offers a unique form of data storage and retrieval, the **CDATA** command proves this, as it uses the mechanism of reading and storing in the PICmicro's flash memory.

Combining the unique features of the ‘self modifying PICmicro's' with a string format, the compiler is capable of reducing the overhead of printing, or transmitting large amounts of text data. The **CSTR** modifier may be used in commands that deal with text processing i.e. **SEROUT**, **HRSOUT**, and **RSOUT** etc.

The **CSTR** modifier is used in conjunction with the **CDATA** command. The **CDATA** command is used for initially creating the string of characters: -

```
STRING1: CDATA "HELLO WORLD" , 0
```

The above line of case will create, in flash memory, the values that make up the ASCII text "HELLO WORLD", at address STRING1. Note the NULL terminator after the ASCII text.

NULL terminated means that a zero (NULL) is placed at the end of the string of ASCII characters to signal that the string has finished.

To display this string of characters, the following command structure could be used: -

```
PRINT CSTR STRING1
```

The label that declared the address where the list of CDATA values resided, now becomes the string's name. In a large program with lots of text formatting, this type of structure can save quite literally hundreds of bytes of valuable code space.

Try both these small programs, and you'll see that using **CSTR** saves a few bytes of code: -

First the standard way of displaying text: -

```
DEVICE 16F877
CLS
PRINT "HELLO WORLD"
PRINT "HOW ARE YOU?"
PRINT "I AM FINE!"
STOP
```

Now using the **CSTR** modifier: -

```
CLS
PRINT CSTR TEXT1
PRINT CSTR TEXT2
PRINT CSTR TEXT3
STOP

TEXT1: CDATA "HELLO WORLD" , 0
TEXT2: CDATA "HOW ARE YOU?" , 0
TEXT3: CDATA "I AM FINE!" , 0
```

Again, note the NULL terminators after the ASCII text in the **CDATA** commands. Without these, the PICmicro^{tm} will continue to transmit data in an endless loop.

The term 'virtual string' relates to the fact that a string formed from the CDATA command cannot be written too, but only read from.

The **STR** modifier is used for sending a string of bytes from a byte array variable. A string is a set of bytes sized values that are arranged or accessed in a certain order. The values 1, 2, 3 would be stored in a string with the value 1 first, followed by 2 then followed by the value 3. A byte array is a similar concept to a string; it contains data that is arranged in a certain order. Each of the elements in an array is the same size. The string 1,2,3 would be stored in a byte array containing three bytes (elements).

Below is an example that displays four bytes (from a byte array): -

```
DIM MYARRAY[10] AS BYTE             ' Create a 10-byte array.
MYARRAY [0] = "H"                   ' Load the first 5 bytes of the array
MYARRAY [1] = "E"                   ' With the data to send
MYARRAY [2] = "L"
MYARRAY [3] = "L"
MYARRAY [4] = "O"
PRINT STR MYARRAY \5          ' Display a 5-byte string.
```

Note that we use the optional \n argument of **STR**. If we didn't specify this, the PICmicro^{tm} would try to keep sending characters until all 10 bytes of the array were transmitted. Since we do not wish all 10 bytes to be transmitted, we chose to tell it explicitly to only send the first 5 bytes.

The above example may also be written as: -

```
DIM MYARRAY [10] AS BYTE            ' Create a 10-byte array.
STR MYARRAY = "HELLO"               ' Load the first 5 bytes of the array
PRINT STR MYARRAY \5                ' Send 5-byte string.
```

The above example, has exactly the same function as the previous one. The only difference is that the string is now constructed using **STR** as a command instead of a modifier.

Declares

There are six DECLARES for use with an alphanumeric LCD and **PRINT**: -

DECLARE LCD_TYPE 1 or 0 , **GRAPHIC** or **ALPHA**

Inform the compiler as to the type of LCD that the **PRINT** command will output to. If GRAPHIC or 1 is chosen then any output by the **PRINT** command will be directed to a graphic LCD based on the Samsung S6B0108 chipset. A value of 0 or ALPHA, or if the DECLARE is not issued will target the standard alphanumeric LCD type

Targeting the graphic LCD will also enable commands such as PLOT, **UNPLOT**, LCDREAD, and LCDWRITE.

DECLARE LCD_DTPIN PORT **.** PIN

Assigns the Port and Pins that the LCD's DT (data) lines will attach to.

The LCD may be connected to the PICmicro^{tm} using either a 4-bit bus or an 8-bit bus. If an 8-bit bus is used, all 8 bits must be on one port. If a 4-bit bus is used, it must be connected to either the bottom 4 or top 4 bits of one port. For example: -

```
DECLARE LCD_DTPIN PORTB.4        ' Used for 4-line interface.

DECLARE LCD_DTPIN PORTB.0        ' Used for 8-line interface.
```

In the previous examples, PORTB is only a personal preference. The LCD's DT lines may be attached to any valid port on the PICmicro^{tm}. If the **DECLARE** is not used in the program, then the default Port and Pin is PORTB.4, which assumes a 4-line interface.

DECLARE LCD_ENPIN PORT **.** PIN
Assigns the Port and Pin that the LCD's EN line will attach to.

If the **DECLARE** is not used in the program, then the default Port and Pin is PORTB.2.

DECLARE LCD_RSPIN PORT **.** PIN
Assigns the Port and Pins that the LCD's RS line will attach to.

If the **DECLARE** is not used in the program, then the default Port and Pin is PORTB.3.

DECLARE LCD_INTERFACE 4 or 8
Inform the compiler as to whether a 4-line or 8-line interface is required by the LCD.

If the **DECLARE** is not used in the program, then the default interface is a 4-line type.

DECLARE LCD_LINES 1 , 2 , or 4
Inform the compiler as to how many lines the LCD has.

LCD's come in a range of sizes, the most popular being the 2 line by 16 character types. However, there are 4-line types as well. Simply place the number of lines that the particular LCD has, into the declare.

If the **DECLARE** is not used in the program, then the default number of lines is 2.

Notes
If no modifier precedes an item in a **PRINT** command, then the characters value is sent to the LCD. This is useful for sending control codes to the LCD. For example: -

```
PRINT $FE , 128
```

Will move the cursor to line 1, position 1 (HOME).

Below is a list of useful control commands: -

Control Command	**Operation**
$FE, 1	Clear display
$FE, 2	Return home (beginning of first line)
$FE, $0C	Cursor off
$FE, $0E	Underline cursor on
$FE, $0F	Blinking cursor on
$FE, $10	Move cursor left one position
$FE, $14	Move cursor right one position
$FE, $C0	Move cursor to beginning of second line
$FE, $94	Move cursor to beginning of third line
$FE, $D4	Move cursor to beginning of fourth line

Note that if the command for clearing the LCD is used, then a small delay should follow it: -

```
PRINT $FE , 1 : DELAYMS 30
```

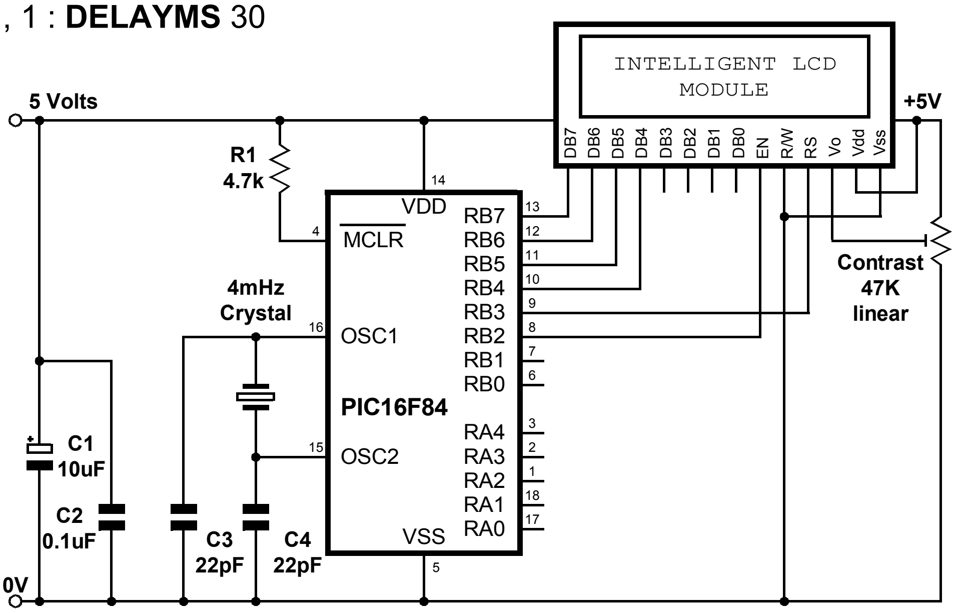
INTELLIGENT LCD MODULE
5 Volts
+5V
DB7
DB6
DB5
DB4
DB3
DB2
DB1
DB0
EN
R/W
RS
Vo
Vdd
Vss
R1
4.7k
14
VDD
4
MCLR
RB7
RB6
RB5
RB4
RB3
RB2
RB1
RB0
13
12
11
10
9
8
7
6
4mHz
Crystal
16
OSC1
PIC16F84
15
OSC2
RA4
RA3
RA2
RA1
RA0
3
2
1
18
17
VSS
5
Contrast
47K
linear
C1
10uF
C2
0.1uF
C3
22pF
C4
22pF
0V

The above diagram shows the default connections for an alphanumeric LCD module. In this instance, connected to the 16F84 PICmicro^{tm}.

Using a Graphic LCD

Once a graphic LCD has been chosen using the **DECLARE LCD_TYPE** directive, all **PRINT** outputs will be directed to that LCD.

The standard modifiers used by an alphanumeric LCD may also be used with the graphics LCD. Most of the above modifiers still work in the expected manner, however, the **AT** modifier now starts at Ypos 0 and Xpos 0, where values 0,0 will be the top left corner of the LCD.

There are also four new modifiers. These are: -

FONT 0 to n	Choose the nth font, if available
INVERSE 0-1	Invert the characters sent to the LCD
OR 0-1	OR the new character with the original
XOR 0-1	XOR the new character with the original

Once one of the four new modifiers has been enabled, all future **PRINT** commands will use that particular feature until the modifier is disabled. For example: -

```
' Enable inverted characters from this point
PRINT AT 0 , 0 , INVERSE 1 , "HELLO WORLD"
PRINT AT 1 , 0 , "STILL INVERTED"
' Now use normal characters
PRINT AT 2 , 0 , INVERSE 0 , "NORMAL CHARACTERS"
```

If no modifiers are present, then the character's ASCII representation will be displayed: -

```
' Print characters A and B
PRINT AT 0 , 0 , 65 , 66
```

Declares
There are nine declares associated with a graphic LCD.

DECLARE LCD_DTPORT PORT
Assign the port that will output the 8-bit data to the graphic LCD.

If the **DECLARE** is not used, then the default port is PORTD.

DECLARE LCD_RWPIN PORT **.** PIN
Assigns the Port and Pin that the graphic LCD's RW line will attach to.

If the **DECLARE** is not used in the program, then the default Port and Pin is PortE.0.

DECLARE LCD_CS1PIN PORT **.** PIN
Assigns the Port and Pin that the graphic LCD's CS1 line will attach to.

If the **DECLARE** is not used in the program, then the default Port and Pin is PORTC.0.

DECLARE LCD_CS2PIN PORT **.** PIN
Assigns the Port and Pin that the graphic LCD's CS2 line will attach to.

If the **DECLARE** is not used in the program, then the default Port and Pin is PORTC.2.

Note
Along with the new declares, two of the existing LCD declares must also be used. Namely, RS_PIN and EN_PIN.

DECLARE INTERNAL_FONT ON - **OFF**, 1 or 0
The graphic LCDs that are compatible with PROTON+ are non-intelligent types, therefore, a separate character set is required. This may be in one of two places, either externally, in an I^2C eeprom, or internally in a **CDATA** table.

If the **DECLARE** is omitted from the program, then an external font is the default setting.

If an external font is chosen, the I^2C eeprom must be connected to the specified SDA and SCL pins (as dictated by **DECLARE** SDA and **DECLARE** SCL).

If an internal font is chosen, it must be on a PICmicro^{tm} device that has self modifying code features, such as the 16F87X range.

The **CDATA** table that contains the font must have a label, named FONT: preceding it. For example: -

```
FONT:- { data for characters 0 to 64 }
        CDATA $7E , $11 , $11 , $11 , $7E , $0' Chr 65 "A"
        CDATA $7F , $49 , $49 , $49 , $36 , $0' Chr 66 "B"
        { rest of font table }
```

Notice the dash after the font's label, this disables any bank switching code that may otherwise disturb the location in memory of the **CDATA** table.

The font table may be anywhere in memory, however, it is best placed after the main program code.

The font is built up of an 8x6 cell, with only 5 of the 6 rows, and 7 of the 8 columns being used for alphanumeric characters. See the diagram below.

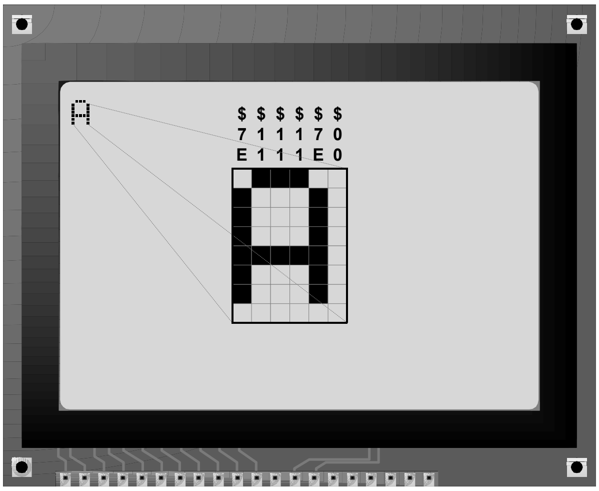

If a graphic character is chosen (chr 0 to 31), the whole of the 8x6 cell is used. In this way, large fonts and graphics may be easily constructed.

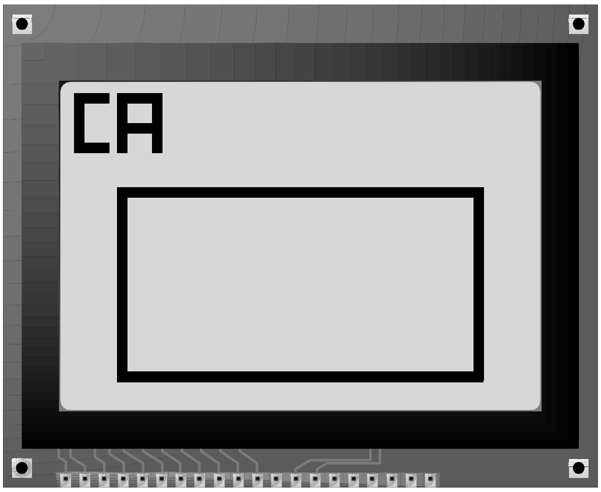

The character set itself is 128 characters long (0 -127). Which means that all the ASCII characters are present, including $, %, &, # etc.

There are two programs on the compiler's CDROM, that are for use with internal and external fonts. **INT_FONT.BAS**, contains a **CDATA** table that may be cut and pasted into your own program if an internal font is chosen. **EXT_FONT.BAS**, writes the character set to a 24C32 I^2C eeprom for use with an external font. Both programs are fully commented.

DECLARE FONT_ADDR 0 to 7
Set the slave address for the I^2C eeprom that contains the font.

When an external source for the font is used, it may be on any one of 8 eeproms attached to the I^2C bus. So as not to interfere with any other eeproms attached, the slave address of the eeprom carrying the font code may be chosen.

If the **DECLARE** is omitted from the program, then address 0 is the default slave address of the font eeprom.

DECLARE GLCD_CS_INVERT ON - **OFF**, 1 or 0
Some graphic LCD types have inverters on the CS lines. Which means that the LCD displays left-hand data on the right side, and vice-versa. The **GLCD_CS_INVERT DECLARE**, adjusts the library LCD handling subroutines to take this into account.

DECLARE GLCD_STROBE_DELAY 0 to 65535 microseconds (us).
If a noisy circuit layout is unavoidable when using a graphic LCD, then the above **DECLARE** may be used. This will create a delay between the ENABLE line being strobed. This can ease random data being produced on the LCD's screen. See below for more details on circuit layout for graphic LCDs.

If the **DECLARE** is not used in the program, then no delay is created between strobes, and the LCD is accessed at full efficiency.

DECLARE GLCD_READ_DELAY 0 to 65535 microseconds (us).
Create a delay of n microseconds between strobing the EN line of the graphic LCD, when reading from the GLCD. This can help noisy, or badly decoupled circuits overcome random bits being examined. The default if the **DECLARE** is not used in the BASIC program is a delay of 0.

Important
Because of the complexity involved with interfacing to the graphic LCD, **six** of the eight stack levels available on the 14-bit core devices, are used when the **PRINT** command is issued with an external font. Therefore, be aware that if **PRINT** is used within a subroutine, you must limit the amount of subroutine nesting that may take place.

If an internal font is implemented, then only **four** stack levels are used.

If the default setting of PORTE is used for the LCD's CS1, CS2, and RW pin connections, then these pins must be set to digital by issuing the following line of code near the beginning of the program: -

```
ADCON1 = 7          ' Set PORTA and PORTE to all digital
```

or alternatively, you may use the directive: -

ALL_DIGITAL = **TRUE**

You will need to refer to the PICmicro's datasheet for ADCON1 settings if PORTA is to be used for analogue inputs.

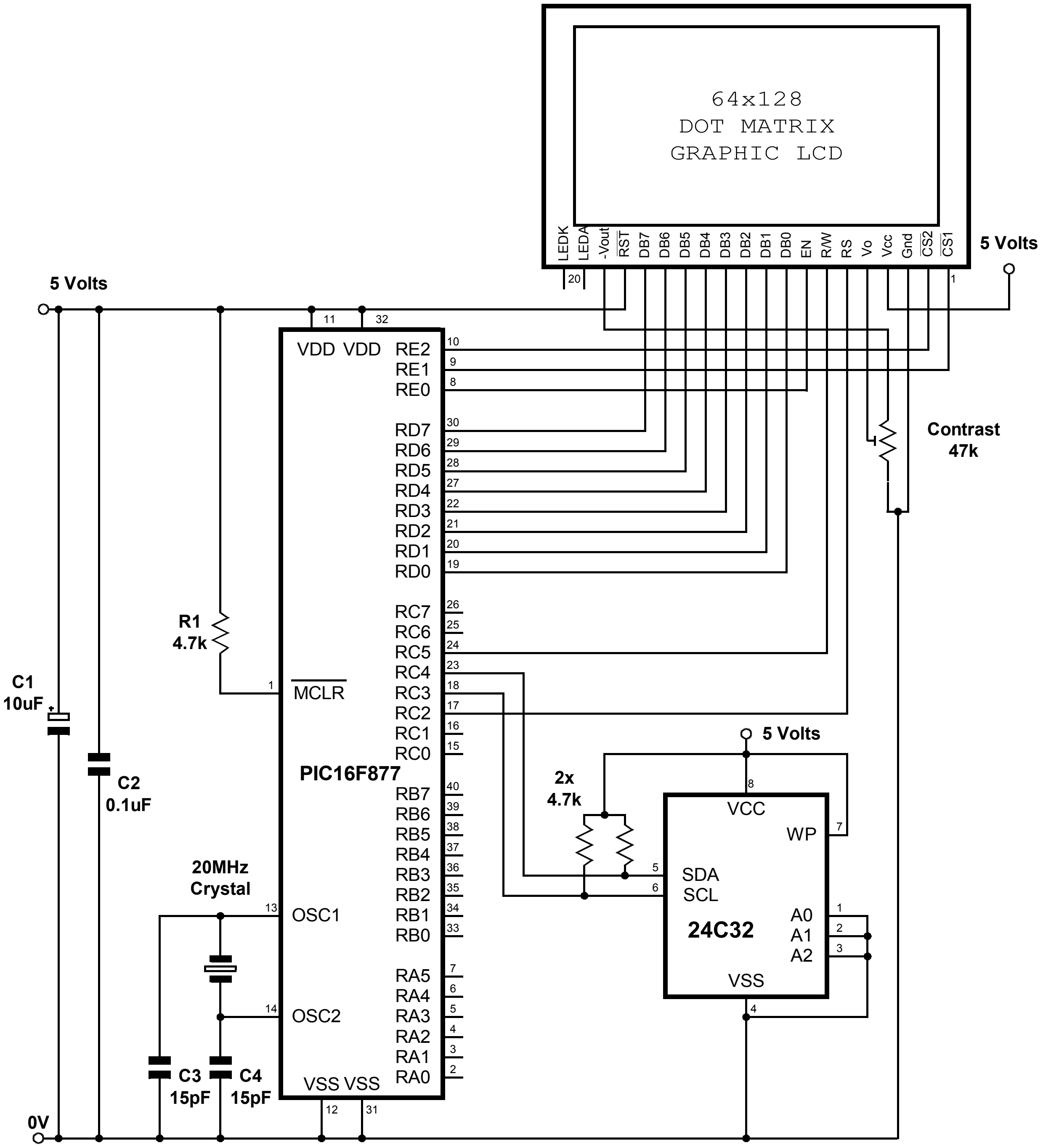
64x128
DOT MATRIX
GRAPHIC LCD
LEDK
LEDA
-Vout
RST
DB7
DB6
DB5
DB4
DB3
DB2
DB1
DB0
EN
R/W
RS
Vo
Vcc
Gnd
CS2
CS1
20
1
5 Volts
5 Volts
Contrast
47k
11
32
VDD VDD
RE2
RE1
RE0
RD7
RD6
RD5
RD4
RD3
RD2
RD1
RD0
RC7
RC6
RC5
RC4
RC3
RC2
RC1
RC0
RB7
RB6
RB5
RB4
RB3
RB2
RB1
RB0
RA5
RA4
RA3
RA2
RA1
RA0
10
9
8
30
29
28
27
22
21
20
19
26
25
24
23
18
17
16
15
40
39
38
37
36
35
34
33
7
6
5
4
3
2
R1
4.7k
1
MCLR
PIC16F877
C1
10uF
C2
0.1uF
20MHz
Crystal
13
OSC1
14
OSC2
C3
15pF
C4
15pF
VSS VSS
12
31
0V
5 Volts
2x
4.7k
8
VCC
WP
7
5
6
SDA
SCL
24C32
A0
A1
A2
1
2
3
VSS
4

The diagram above shows the connections required for an external font. The eeprom has a slave address of 0. If an internal font is used, then the eeprom may be omitted.

PULSIN

Syntax
Variable **= PULSIN** *Pin* , *State*

Overview
Change the specified pin to input and measure an input pulse.

Operators
Variable is a user defined variable. This may be a word variable with a range of 1 to 65535, or a byte variable with a range of 1 to 255.
Pin is a Port.Pin constant that specifies the I/O pin to use.
State is a constant (0 or 1) or name HIGH - LOW that specifies which edge must occur before beginning the measurement.

Example
```
        DIM VAR1 AS BYTE
Loop:
        VAR1 = PULSIN PORTB.0 , 1      ' Measure a pulse on pin 0 of PORTB.
        PRINT DEC VAR1 , " "           ' Display the reading
        GOTO Loop                      ' Repeat the process.
```

Notes
PULSIN acts as a fast clock that is triggered by a change in state (0 or 1) on the specified pin. When the state on the pin changes to the state specified, the clock starts counting. When the state on the pin changes again, the clock stops. If the state of the pin doesn't change (even if it is already in the state specified in the **PULSIN** instruction), the clock won't trigger. **PULSIN** waits a maximum of 0.65535 seconds for a trigger, then returns with 0 in *variabl*e.

The variable can be either a **WORD** or a **BYTE** . If the variable is a word, the value returned by **PULSIN** can range from 1 to 65535 units.

The units are dependant on the frequency of the crystal used. If a 4MHz crystal is used, then each unit is 10us, while a 20MHz crystal produces a unit length of 2us.

If the variable is a byte and the crystal is 4MHz, the value returned can range from 1 to 255 units of 10µs. Internally, **PULSIN** always uses a 16-bit timer. When your program specifies a byte, **PULSIN** stores the lower 8 bits of the internal counter into it. Pulse widths longer than 2550µs will give false, low readings with a byte variable. For example, a 2560µs pulse returns a reading of 256 with a word variable and 0 with a byte variable.

See also : COUNTER, PULSOUT, RCIN.

PULSOUT

Syntax

PULSOUT *Pi*n , *Period,* { *Initial State* }

Overview

Generate a pulse on *Pin* of specified *Period*. The pulse is generated by toggling the pin twice, thus the initial state of the pin determines the polarity of the pulse. Or alternatively, the initial state may be set by using HIGH-LOW or 1-0 after the *Period*. *Pin* is automatically made an output.

Operators

Pin is a Port.Pin constant that specifies the I/O pin to use.
Period can be a constant of user defined variable. See notes.
State is an optional constant (0 or 1) or name HIGH - LOW that specifies the state of the outgoing pulse.

Example

```
' Send a high pulse 1ms long (at 4MHz) to PORTB Pin5
LOW PORTB.5
PULSOUT PORTB.5 , 100

' Send a high pulse 1ms long (at 4MHz) to PORTB Pin5
PULSOUT PORTB.5 , 100 , HIGH
```

Notes

The resolution of **PULSOUT** is dependent upon the oscillator frequency. If a 4MHz oscillator is used, the *Period* of the generated pulse will be in 10us increments. If a 20MHz oscillator is used, *Period* will have a 2us resolution. Declaring an XTAL value has no effect on **PULSOUT**. The resolution always changes with the actual oscillator speed.

See also : COUNTER , PULSIN, RCIN.

PUSH

Syntax
PUSH *Variable*, {*Variable*, *Variable* etc}

Overview
Place a single variable or multiple variables onto a software stack.
If the **PUSH** command is issued without a following variable, it will implement the assembler mnemonic **PUSH**, which manipulates the PICmicro's call stack.

Operators
Variable is a user defined variable of type **BIT**, **BYTE**, **BYTE_ARRAY**, **WORD**, **WORD_ARRAY**, **DWORD**, **FLOAT**, or **STRING**, or **constant** value.

The amount of bytes pushed on to the stack varies with the variable type used. The list below shows how many bytes are pushed for a particular variable type, and their order.

BIT	1 Byte is pushed that holds the condition of the bit.
BYTE	1 Byte is pushed.
BYTE_ARRAY	1 Byte is pushed.
WORD	2 Bytes are pushed. High Byte then Low Byte.
WORD_ARRAY	2 Bytes are pushed. High Byte then Low Byte.
DWORD	4 Bytes are pushed. High Byte, Mid2 Byte, Mid1 Byte then Low Byte.
FLOAT	4 Bytes are pushed. High Byte, Mid2 Byte, Mid1 Byte then Low Byte.
STRING	2 Bytes are pushed. High Byte then Low Byte that point to the start address of the string in memory.
CONSTANT	Amount of bytes varies according to the value pushed. High Byte first.

Example 1
' Push two variables on to the stack then retrieve them

```
DEVICE = 18F452                 ' Stack only suitable for 16-bit core devices
STACK_SIZE = 20                 ' Create a small stack capable of holding 20 bytes

DIM WRD as WORD                 ' Create a WORD variable
DIM DWD as DWORD                ' Create a DWORD variable

WRD = 1234                      ' Load the WORD variable with a value
DWD = 567890                    ' Load the DWORD variable with a value
PUSH WRD , DWD                  ' Push the WORD variable then the DWORD variable

CLEAR WRD                       ' Clear the WORD variable
CLEAR DWD                       ' Clear the DWORD variable

POP DWD , WRD                   ' Pop the DWORD variable then the WORD variable
PRINT DEC WRD , "  " , DEC DWD       ' Display the variables as decimal
STOP
```

Example 2
' Push a STRING on to the stack then retrieve it

```
DEVICE = 18F452                    ' Stack only suitable for 16-bit core devices
STACK_SIZE = 10                    ' Create a small stack capable of holding 10 bytes

DIM SOURCE_STRING as STRING * 20         ' Create a STRING variable
DIM DEST_STRING as STRING * 20           ' Create another STRING variable

SOURCE_STRING = "HELLO WORLD"    ' Load the STRING variable with characters

PUSH SOURCE_STRING                    ' Push the STRING variable's address

POP DEST_STRING          ' Pop the previously pushed STRING into DEST_STRING
PRINT DEST_STRING        ' Display the string, which will be "HELLO WORLD"
STOP
```

Formatting a PUSH.
Each variable type, and more so, constant value, will push a different amount of bytes on to the stack. This can be a problem where values are concerned because it will not be known what size variable is required in order to **POP** the required amount of bytes from the stack. For example, the code below will push a constant value of 200 on to the stack, which requires 1 byte.

```
PUSH 200
```

All well and good, but what if the recipient popped variable is of a **WORD** or **DWORD** type.

```
POP WRD
```

Popping from the stack into a **WORD** variable will actually pull 2 bytes from the stack, however, the code above has only pushed on byte, so the stack will become out of phase with the values or variables previously pushed. This is not really a problem where variables are concerned, as each variable has a known byte count and the user knows if a **WORD** is pushed, a **WORD** should be popped.

The answer lies in using a formatter preceding the value or variable pushed, that will force the amount of bytes loaded on to the stack. The formatters are **BYTE**, **WORD**, **DWORD** or **FLOAT**.

The **BYTE** formatter will force any variable or value following it to push only 1 byte to the stack.

```
PUSH BYTE 12345
```

The **WORD** formatter will force any variable or value following it to push only 2 bytes to the stack: -

```
PUSH WORD 123
```

The **DWORD** formatter will force any variable or value following it to push only 4 bytes to the stack: -

```
PUSH DWORD 123
```

The **FLOAT** formatter will force any variable or value following it to push only 4 bytes to the stack, and will convert a constant value into the 4-byte floating point format: -

PUSH FLOAT 123

So for the **PUSH** of 200 code above, you would use: -

PUSH WORD 200

In order for it to be popped back into a **WORD** variable, because the push would be the high byte of 200, then the low byte.

If using the multiple variable **PUSH**, each parameter can have a different formatter preceding it.

PUSH WORD 200 , **DWORD** 1234 , **FLOAT** 1234

Note that if a floating point value is pushed, 4 bytes will be placed on the stack because this is a known format.

What is a STACK?
All microprocessors and most microcontrollers have access to a STACK, which is an area of RAM allocated for temporary data storage. But this is sadly lacking on a PICmicro^{tm} device. However, the 16-bit core devices have an architecture and low-level mnemonics that allow a STACK to be created and used very efficiently.

A stack is first created in high memory by issuing the **STACK_SIZE Declare**.

STACK_SIZE = 40

The above line of code will reserve 40 bytes at the top of RAM that cannot be touched by any BASIC command, other than **PUSH** and **POP**. This means that it is a safe place for temporary variable storage.

Taking the above line of code as an example, we can examine what happens when a variable is pushed on to the 40 byte stack, and then popped off again.

First the RAM is allocated. For this explanation we will assume that a 18F452 PICmicro^{tm} device is being used. The 18F452 has 1536 bytes of RAM that stretches linearly from address 0 to 1535. Reserving a stack of 40 bytes will reduce the top of memory so that the compiler will only see 1495 bytes (1535 - 40). This will ensure that it will not inadvertently try and use it for normal variable storage.

Pushing.
When a **WORD** variable is pushed onto the stack, the memory map would look like the diagram below: -

```
Top of Memory     |...............Empty RAM...........................| Address 1535
                  ~                                                   ~
                  ~                                                   ~
                  |...............Empty RAM...........................| Address 1502
                  |...............Empty RAM...........................| Address 1501
                  |  Low Byte address of WORD variable   | Address 1496
Start of Stack    |  High Byte address of WORD variable  | Address 1495
```

The high byte of the variable is first pushed on to the stack, then the low byte. And as you can see, the stack grows in an upward direction whenever a **PUSH** is implemented, which means it shrinks back down whenever a **POP** is implemented.

If we were to **PUSH** a **DWORD** variable on to the stack as well as the **WORD** variable, the stack memory would look like: -

```
Top of Memory    |...............Empty RAM............................| Address 1535
                 ~                                                    ~
                 ~                                                    ~
                 |...............Empty RAM............................| Address 1502
                 |...............Empty RAM............................| Address 1501
                 |  Low Byte address of DWORD variable | Address 1500
                 |  Mid1 Byte address of DWORD variable| Address 1499
                 |  Mid2 Byte address of DWORD variable| Address 1498
                 |  High Byte address of DWORD variable| Address 1497
                 |  Low Byte address of WORD variable   | Address 1496
Start of Stack   |  High Byte address of WORD variable  | Address 1495
```

Popping.
When using the **POP** command, the same variable type that was pushed last must be popped first, or the stack will become out of phase and any variables that are subsequently popped will contain invalid data. For example, using the above analogy, we need to **POP** a **DWORD** variable first. The **DWORD** variable will be popped Low Byte first, then MID1 Byte, then MID2 Byte, then lastly the High Byte. This will ensure that the same value pushed will be reconstructed correctly when placed into its recipient variable. After the **POP**, the stack memory map will look like: -

```
Top of Memory    |...............Empty RAM...........................| Address 1535
                 ~                                                    ~
                 ~                                                    ~
                 |...............Empty RAM............................| Address 1502
                 |...............Empty RAM............................| Address 1501
                 |  Low Byte address of WORD variable   | Address 1496
Start of Stack   |  High Byte address of WORD variable  | Address 1495
```

If a **WORD** variable was then popped, the stack will be empty, however, what if we popped a **BYTE** variable instead? the stack would contain the remnants of the **WORD** variable previously pushed. Now what if we popped a **DWORD** variable instead of the required **WORD** variable? the stack would underflow by two bytes and corrupt any variables using those address's . The compiler cannot warn you of this occurring, so it is up to you, the programmer, to ensure that proper stack management is carried out. The same is true if the stack overflows. i.e. goes beyond the top of RAM. The compiler cannot give a warning.

Technical Details of Stack implementation.
The stack implemented by the compiler is known as an ***Incrementing Last-In First-Out*** Stack. *Incrementing* because it grows upwards in memory. *Last-In First-Out* because the last variable pushed, will be the first variable popped.

The stack is not circular in operation, so that a stack overflow will rollover into the PICmicro's hardware register, and an underflow will simply overwrite RAM immediately below the Start of Stack memory. If a circular operating stack is required, it will need to be coded in the main BASIC program, by examination and manipulation of the stack pointer (see below).

Indirect register pair FSR2L and FSR2H are used as a 16-bit stack pointer, and are incremented for every **BYTE** pushed, and decremented for every **BYTE** popped. Therefore checking the FSR2 registers in the BASIC program will give an indication of the stack's condition if required. This also means that the BASIC program cannot use the FSR2 register pair as part of its code, unless for manipulating the stack. Note that none of the compiler's commands, other than **PUSH** and **POP**, use FSR2.

Whenever a variable is popped from the stack, the stack's memory is not actually cleared, only the stack pointer is moved. Therefore, the above diagrams are not quite true when they show empty RAM, but unless you have use of the remnants of the variable, it should be considered as empty, and will be overwritten by the next **PUSH** command.

See also : POP, GOSUB, RETURN .

PWM

Syntax

PWM *Pin* , *Duty* , *Cycles*

Overview

Output pulse-width-modulation on a pin, then return the pin to input state.

Operators

Pin is a Port.Pin constant that specifies the I/O pin to use.
Duty is a variable, constant (0-255), or expression, which specifies the analogue level desired (0-5 volts).
Cycles is a variable or constant (0-255) which specifies the number of cycles to output. Larger capacitors require multiple cycles to fully charge. Cycle time is dependant on Xtal frequency. If a 4MHz crystal is used, then *cycle* takes approx 5 ms. If a 20MHz crystal is used, then *cycle* takes approx 1 ms.

Notes

PWM can be used to generate analogue voltages (0-5V) through a pin connected to a resistor and capacitor to ground; the resistor-capacitor junction is the analogue output (see circuit). Since the capacitor gradually discharges, **PWM** should be executed periodically to refresh the analogue voltage.

PWM emits a burst of 1s and 0s whose ratio is proportional to the *duty* value you specify. If *duty* is 0, then the pin is continuously low (0); if *duty* is 255, then the pin is continuously high. For values in between, the proportion is *duty*/255. For example, if *duty* is 100, the ratio of 1s to 0s is 100/255 = 0.392, approximately 39 percent.

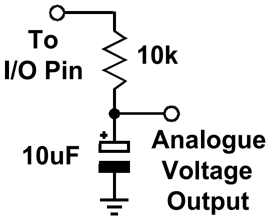
To
I/O Pin
10k
10uF
Analogue
Voltage
Output

When such a burst is used to charge a capacitor arranged, the voltage across the capacitor is equal to:-

(duty/ 255) * 5.

So if *duty* is 100, the capacitor voltage is

(100/255) * 5 = 1.96 volts.

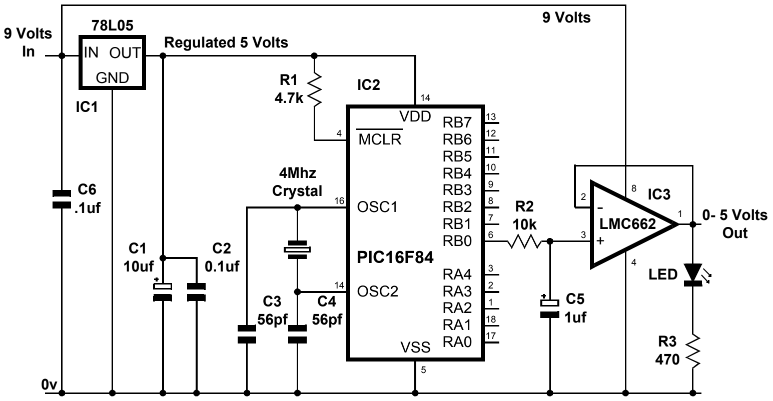
9 Volts
In
78L05
IN OUT
GND
IC1
Regulated 5 Volts
9 Volts
R1
4.7k
IC2
VDD
MCLR
C6
.1uf
4Mhz
Crystal
OSC1
OSC2
PIC16F84
VSS
RB7
RB6
RB5
RB4
RB3
RB2
RB1
RB0
RA4
RA3
RA2
RA1
RA0
R2
10k
C1
10uf
C2
0.1uf
C3
56pf
C4
56pf
C5
1uf
IC3
LMC662
0- 5 Volts
Out
LED
R3
470
0v

This voltage will drop as the capacitor discharges through whatever load it is driving. The rate of discharge is proportional to the current drawn by the load; more current = faster discharge. You can reduce this effect in software by refreshing the capacitor's charge with frequent use of the **PWM** command. You can also buffer the output using an op-amp to greatly reduce the need for frequent **PWM** cycles.

See also : **HPWM, PULSOUT, SERVO.**

RANDOM

Syntax
Variable **= RANDOM**

or

RANDOM *Variable*

Overview
Generate a pseudo-randomisation on *Va*riable. *Variable* should be a 16-bit variable.

Operators
Variable to store the result. The pseudo-random algorithm used has a working length of 1 to 65535 (only zero is not produced).

Example

```
VAR1 = RANDOM   ' Get a random number into VAR1
RANDOM VAR1     ' Get a random number into VAR1
```

See also: **SEED.**

RCIN

Syntax

Variable = **RCIN** *Pin* , *State*

Overview

Count time while pin remains in *state*, usually used to measure the charge/ discharge time of resistor/capacitor (RC) circuit.

Operators

Pin is a Port.Pin constant that specifies the I/O pin to use. This pin will be placed into input mode and left in that state when the instruction finishes.
State is a variable or constant (1 or 0) that will end the Rcin period. Text, HIGH or LOW may also be used instead of 1 or 0.
Variable is a variable in which the time measurement will be stored.

Example

```
DIM Result AS WORD              ' Word variable to hold result.
HIGH PORTB.0                    ' Discharge the cap
DELAYMS 1                       ' Wait for 1 ms.
Result = RCIN PORTB.0 , High    ' Measure RC charge time.
PRINT DEC Result , " "          ' Display the value on an LCD.
```

Notes

The resolution of **RCIN** is dependent upon the oscillator frequency. If a 4MHz oscillator is used, the time in state is returned in 10us increments. If a 20MHz oscillator is used, the time in state will have a 2us resolution. Declaring an XTAL value has no effect on **RCIN**. The resolution always changes with the actual oscillator speed. If the pin never changes state 0 is returned.

When **RCIN** executes, it starts a counter. The counter stops as soon as the specified pin is no longer in *State* (0 or 1). If *pin* is not in *State* when the instruction executes, **RCIN** will return 1 in *Variabl*e, since the instruction requires one timing cycle to discover this fact. If pin remains in *State* longer than 65535 timing cycles **RCIN** returns 0.

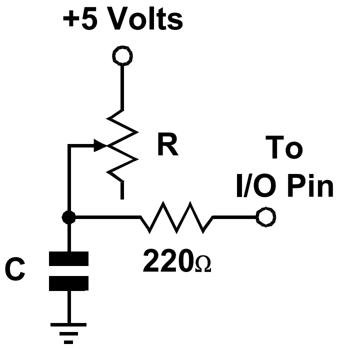

Figure A

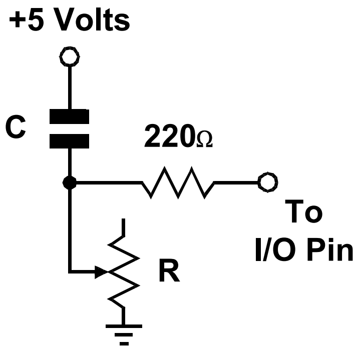

Figure B

The diagrams above show two suitable RC circuits for use with **RCIN**. The circuit in figure B is preferred, because the PICmicro's logic threshold is approximately 1.5 volts. This means that the voltage seen by the pin will start at 5V then fall to 1.5V (a span of 3.5V) before **RCIN** stops. With the circuit in figure A, the voltage will start at 0V and rise to 1.5V (spanning only 1.5V) before **RCIN** stops.

For the same combination of R and C, the circuit shown in figure A will produce a higher result, and therefore more resolution than figure B.

Before **RCIN** executes, the capacitor must be put into the state specified in the **RCIN** command. For example, with figure B, the capacitor must be discharged until both plates (sides of the capacitor) are at 5V. It may seem strange that discharging the capacitor makes the input high, but you must remember that a capacitor is charged when there is a voltage difference between its plates. When both sides are at +5 Volts, the capacitor is considered discharged. Below is a typical sequence of instructions for the circuit in figure A.

```
DIM Result AS WORD              ' Word variable to hold result.
HIGH PORTB.0                    ' Discharge the cap
DELAYMS 1                       ' Wait for 1 ms.
Result = RCIN PORTB.0 , High    ' Measure RC charge time.
PRINT DEC Result , “  “         ' Display the value on an LCD.
```

Using **RCIN** is very straightforward, except for one detail: For a given R and C, what value will **RCIN** return? It’s actually rather easy to calculate, based on a value called the RC time constant, or tau (τ) for short. Tau represents the time required for a given RC combination to charge or discharge by 63 percent of the total change in voltage that they will undergo. More importantly, the value τ is used in the generalized RC timing calculation. Tau’s formula is just R multiplied by C: -

$\tau = R \times C$

The general RC timing formula uses τ to tell us the time required for an RC circuit to change from one voltage to another: -

$\text{time} = -\tau * (\ln (V_{final} / V_{initial}))$

In this formula ln is the natural logarithm. Assume we’re interested in a 10kΩ resistor and 0.1µF cap. Calculate τ: -

$\tau = (10 \times 10^{3}) \times (0.1 \times 10^{-6}) = 1 \times 10^{-3}$

The RC time constant is 1×10^{-3} or 1 millisecond. Now calculate the time required for this RC circuit to go from 5V to 1.5V (as in figure B):

$\text{Time} = -1 \times 10^{-3} * (\ln(5.0v / 1.5v)) = 1.204 \times 10^{-3}$

Using a 20MHz crystal, the unit of time is 2µs, that time (1.204×10^{-3}) works out to 602 units. With a 10kΩ resistor and 0.1µF capacitor, **RCIN** would return a value of approximately 600. Since $V_{initial}$ and V_{final} don't change, we can use a simplified rule of thumb to estimate **RCIN** results for circuits similar to figure A: -

RCIN units = 600 x R (in kΩ) x C (in µF)

Another useful rule of thumb can help calculate how long to charge/discharge the capacitor before **RCIN**. In the example shown, that’s the purpose of the **HIGH** and **DELAYMS** commands. A given RC charges or discharges 98 percent of the way in 4 time constants (4 x R x C).

In both circuits, the charge/discharge current passes through a 220Ω series resistor and the capacitor. So if the capacitor were 0.1µF, the minimum charge/discharge time should be: -

Charge time = 4 x 220 x (0.1 x 10^{-6}) = 88 x 10^{-6}

So it takes only 88µs for the cap to charge/discharge, which means that the 1ms charge/discharge time of the example is more than adequate.

You may be wondering why the 220Ω resistor is necessary at all. Consider what would happen if resistor R in figure A were a pot, and was adjusted to 0Ω. When the I/O pin went high to discharge the cap, it would see a short direct to ground. The 220Ω series resistor would limit the short circuit current to 5V/220Ω = 23mA and protect the PICmicro^{tm} from any possible damage.

See also : **ADIN, COUNTER, POT, PULSIN.**

READ

Syntax
READ *Variable*

Overview
READ the next value from a **DATA** table and place into *variable*

Operators
Variable is a user defined variable.

Example 1

```
DIM VAR1 AS BYTE
DATA 5 , 8 , "fred" , 12
RESTORE
READ VAR1           ' VAR1 will now contain the value 5
READ VAR1           ' VAR1 will now contain the value 8
RESTORE 3           ' Pointer now placed at location 4 in our data table i.e. "r"
READ VAR1           ' VAR1 will now contain the value 114 i.e. the 'r' character in decimal
```

The data table is defined with the values 5,8,102,114,101,100,12 as "fred" equates to f:102,r:114,e:101,d:100 in decimal. The table pointer is immediately restored to the beginning of the table. This is not always required but as a general rule, it is a good idea to prevent table reading from overflowing.

The first **READ** VAR1 takes the first item of data from the table and increments the table pointer. The next **READ** VAR1 therefore takes the second item of data.

RESTORE 3 moves the table pointer to the fourth location in the table, in this case where the letter 'r' is. **READ** VAR1 now retrieves the decimal equivalent of 'r' which is 114.

Example 2

```
DEVICE 16F877
DIM CHAR AS BYTE
DIM LOOP AS BYTE
DATA "HELLO WORLD"          ' Create a string of text in code memory
CLS
FOR LOOP = 0 TO 9           ' Create a loop of 10
RESTORE LOOP                ' Point to position within the DATA statement
READ CHAR                   ' Read data into CHAR
PRINT CHAR                  ' Display the value read
NEXT
STOP
```

The program above reads and displays 10 values from the accompanying **DATA** statement. Resulting in "HELLO WORL" being displayed.

DATA is not simply used for character storage, it may also hold 8, 16, 32 bit, or floating point values. The example below illustrates this: -

```
DEVICE = 16F628
DIM VAR1 AS BYTE
DIM WRD1 AS WORD
DIM DWD1 AS DWORD
DIM FLT1 AS FLOAT
DATA 123 , 1234 , 123456 , 123.456
CLS
RESTORE                    ' Point to first location within DATA
READ VAR1                  ' Read the 8-bit value
PRINT DEC VAR1,"  "
READ WRD1                  ' Read the 16-bit value
PRINT DEC WRD1
READ DWD1                  ' Read the 32-bit value
PRINT AT 2,1, DEC DWD1,"  "
READ FLT1                  ' Read the floating point value
PRINT DEC FLT1
STOP
```

Floating point examples.

14-bit core example

```
' 14-bit read floating point data from a table and display the results
DEVICE = 16F877
DIM FLT AS FLOAT                ' Declare a FLOATING POINT variable
DATA 3.14 , 65535.123 , 1234.5678 , -1243.456 , -3.14 , 998999.12 , 0.005
CLS                             ' Clear the LCD
RESTORE                         ' Point to first location within DATA
REPEAT                          ' Create a loop
READ FLT                        ' Read the data from the DATA table
PRINT AT 1 , 1 , DEC3 FLT       ' Display the data read
DELAYMS 1000                    ' Slow things down
UNTIL FLT = 0.005               ' Stop when 0.005 is read
STOP
```

16-bit core example

```
' 16-bit read floating point data from a table and display the results
DEVICE = 18F452
DIM FLT AS FLOAT                ' Declare a FLOATING POINT variable
DATA 3.14 , 65535.123 , 1234.5678 , -1243.456 , -3.14 , 998999.12 , 0.005
CLS                             ' Clear the LCD
RESTORE                         ' Point to first location within DATA
REPEAT                          ' Create a loop
READ FLT                        ' Read the data from the DATA table
PRINT AT 1 , 1 , DEC3 FLT       ' Display the data read
DELAYMS 1000                    ' Slow things down
UNTIL FLT = 0.005               ' Stop when 0.005 is read
STOP
```

Notes

If a **FLOAT**, **DWORD**, or **WORD** size variable is used in the **READ** command, then a 32, or 16-bit (respectively) value is read from the data table. Consequently, if a **BYTE** size variable is used, then 8-bits are read. **BIT** sized variables also read 8-bits from the table, but any value greater than 0 is treated as a 1.

Attempts to read past the end of the table will result in errors and undetermined results.

See also : **CDATA, CREAD, CWRITE, DATA, LDATA, LREAD, LOOKUP, RESTORE.**

REM

Syntax
REM *Comments* or**'** *Comments* or **;** *Comments*

Overview
Insert reminders in your BASIC source code. These lines are not compiled and are used merely to provide information to the person viewing the source.

Operators
Comments can be any alphanumeric text.

Example

```
DIM A , B , C
A = 12 : B = 4
REM Now add them together
C = A + B
' Now subtract them
C = A - B' They are now subtracted
```

Notes
Semicolon **;** single quote**'** and **REM** are the same.

Remarks in the assembler listing are turned off by default. To turn them on, use the following command near the top of your program: -

REMARKS ON

To turn off the remarks, use **OFF** instead of **ON**.

REPEAT...UNTIL

Syntax
REPEAT *Condition*
Instructions
Instructions
UNTIL *Condition*

or

REPEAT { *Instructions* **:** } **UNTIL** *Condition*

Overview
Execute a block of instructions until a condition is true.

Example

```
VAR1 = 1
REPEAT
    PRINT DEC VAR1 , " "
    DELAYMS 200
    INC VAR1
UNTIL VAR1 > 10
```

or

```
REPEAT HIGH LED : UNTIL PORTA.0 = 1      ' Wait for a Port change
```

Notes
The **REPEAT-UNTIL** loop differs from the **WHILE-WEND** type in that, the **REPEAT** loop will carry out the instructions within the loop at least once, then continuously until the condition is true, but the **WHILE** loop only carries out the instructions if the condition is true.

The **REPEAT-UNTIL** loop is an ideal replacement to a **FOR-NEXT** loop, and actually takes less code space, thus performing the loop faster.

Two commands have been added especially for a **REPEAT** loop, these are **INC** and **DEC**.

INC. Increment a variable i.e. VAR1 = VAR1 + 1

DEC. Decrement a variable i.e. VAR1 = VAR1 - 1

The above example shows the equivalent to the **FOR-NEXT** loop: -

```
FOR VAR1 = 1 TO 10 : NEXT
```

See also : **WHILE...WEND, FOR...NEXT...STEP.**

RESTORE

Syntax
RESTORE *Value*

Overview
Moves the pointer in a **DATA** table to the position specified by *value*

Operators
Value can be a constant, variable, or expression.

Example

```
DIM VAR1
DATA 5 , 8 , "fred" , 12
RESTORE
READ VAR1
' VAR1 will now contain the value 5
READ VAR1
' VAR1 will now contain the value 8
RESTORE 3
' Pointer now placed at location 4 in our data table i.e. "r"
READ VAR1
'VAR1 will now contain the value 114 i.e. the 'r' character in decimal
```

The data table is defined with the values 5,8,102,114,101,100,12 as "fred" equates to f:102,r:114,e:101,d:100 in decimal. The table pointer is immediately restored to the beginning of the table. This is not always required but as a general rule, it is a good idea to prevent table reading from overflowing.

The first **READ** VAR1 takes the first item of data from the table and increments the table pointer. The next **READ** VAR1 therefore takes the second item of data.

RESTORE 3 moves the table pointer to the fourth location (first location is pointer position 0) in the table - in this case where the letter 'r' is. **READ** VAR1 now retrieves the decimal equivalent of 'r' which is 114.

DATA, **READ**, and **RESTORE** are a remnant of previous compiler versions and have been superceded by **LDATA**, **LREAD**, **LREAD8**, **LREAD16**, **LREAD32**, **CDATA**, and **CREAD**. Using **DATA**, **READ**, or **RESTORE** is not recommended for new programs.

See also : CDATA, CREAD, CWRITE, DATA, LOOKUP, READ.

RESUME

When the **RESUME** statement is encountered at the end of the BASIC interrupt handler, it sets the GIE bit to re-enable interrupts and returns to where the program was before the interrupt occurred. DISABLE stops the compiler from inserting the Call to the interrupt checker before each command. This allows sections of code to execute without the possibility of being interrupted. ENABLE allows the insertion to continue.

A DISABLE should be placed before the interrupt handler so that it will not be restarted every time the GIE bit is checked. If it is desired to turn off interrupts for some reason after **ON INTERRUPT** is encountered, you must not turn off the GIE bit. Turning off this bit informs the compiler an interrupt has happened and it will execute the interrupt handler forever.

Instead use: -

```
        INTCON = $80
```

This disables all the individual interrupts but leaves the Global Interrupt Enable bit set.

A final note about interrupts in BASIC is if the program uses the command structure: -

```
Fin:    GOTO Fin
```

You must remember the interrupt flag is checked before each instruction. It immediately jumps to label Fin with no interrupt check. Other commands must be placed in the loop for the interrupt check to happen: -

```
Fin:    DELAYMS 1
        GOTO Fin
```

See also : SOFTWARE INTERRUPTS in BASIC, DISABLE, ENABLE.

RETURN

Syntax
RETURN

or

RETURN *Variable*

Availability
All devices. But a parameter return is only supported with 16-bit core devices.

Overview
Return from a subroutine.

If using a 16-bit core device, a parameter can be pushed onto a software stack before the return mnemonic is implemented.

Variable is a user defined variable of type **BIT**, **BYTE**, **BYTE_ARRAY**, **WORD**, **WORD_ARRAY**, **DWORD**, **FLOAT**, or **STRING**, or **constant** value, that will be pushed onto the stack before the subroutine is exited.

Example

```
' Call a subroutine with parameters
        DEVICE = 18F452                 ' Stack only suitable for 16-bit core devices
        STACK_SIZE = 20                 ' Create a small stack capable of holding 20 bytes

        DIM WRD1 as WORD                ' Create a WORD variable
        DIM WRD2 as WORD                ' Create another WORD variable
        DIM RECEIPT as WORD             ' Create a variable to hold result

        WRD1 = 1234                     ' Load the WORD variable with a value
        WRD2 = 567                      ' Load the other WORD variable with a value
        ' Call the subroutine and return a value
        GOSUB ADD_THEM [WRD1 , WRD2] , RECEIPT
        PRINT DEC RECEIPT                       ' Display the result as decimal
        STOP

' Subroutine starts here. Add the two parameters passed and return the result
ADD_THEM:
        DIM ADD_WRD1 as WORD                    ' Create two uniquely named variables
        DIM ADD_WRD2 as WORD

        POP ADD_WRD2                            ' Pop the last variable pushed
        POP ADD_WRD1                            ' Pop the first variable pushed
        ADD_WRD1 = ADD_WRD1 + ADD_WRD2                  ' Add the values together
        RETURN ADD_WRD1                         ' Return the result of the addition
```

In reality, what's happening with the **RETURN** in the above program is simple, if we break it into its constituent events: -

```
PUSH ADD_WRD1
RETURN
```

Notes

The same rules apply for the variable returned as they do for **POP**, which is after all, what is happening when a variable is returned.

RETURN resumes execution at the statement following the **GOSUB** which called the subroutine.

See also : CALL, GOSUB, PUSH, POP .

RIGHT$

Syntax
Destination String = **RIGHT$ (***Source String* **,** *Amount of characters***)**

Overview
Extract *n* amount of characters from the right of a source string and copy them into a destination string.

Overview
Destination String can only be a **STRING** variable, and should be large enough to hold the correct amount of characters extracted from the *Source String*.
Source String can be a **STRING** variable, or a **Quoted String of Characters**. See below for more variable types that can be used for *Source String*.
Amount of characters can be any valid variable type, expression or constant value, that signifies the amount of characters to extract from the right of the *Source String*. Values start at 1 for the rightmost part of the string and should not exceed 255 which is the maximum allowable length of a STRING variable.

Example 1
' Copy 5 characters from the right of SOURCE_STRING into DEST_STRING

```
DEVICE = 18F452                        ' Must be a 16-bit core device for Strings
DIM SOURCE_STRING as STRING * 20       ‘ Create a String of 20 characters
DIM DEST_STRING as STRING * 20         ‘ Create another String

SOURCE_STRING = "HELLO WORLD"          ' Load the source string with characters
' Copy 5 characters from the source string into the destination string
DEST_STRING = RIGHT$ (SOURCE_STRING , 5)
PRINT DEST_STRING                 ' Display the result, which will be "WORLD"
STOP
```

Example 2
' Copy 5 characters from the right of a Quoted Character String into DEST_STRING

```
DEVICE = 18F452                        ' Must be a 16-bit core device for Strings
DIM DEST_STRING as STRING * 20         ‘ Create a String of 20 characters

' Copy 5 characters from the quoted string into the destination string
DEST_STRING = RIGHT$ ("HELLO WORLD" , 5)
PRINT DEST_STRING                 ' Display the result, which will be "WORLD"
STOP
```

The *Source String* can also be a **BYTE**, **WORD**, **BYTE_ARRAY**, **WORD_ARRAY** or **FLOAT** variable, in which case the value contained within the variable is used as a pointer to the start of the Source String's address in RAM.

Example 3
' Copy 5 characters from the right of SOURCE_STRING into DEST_STRING using a pointer to
‘ SOURCE_STRING

```
    DEVICE = 18F452                          ' Must be a 16-bit core device for Strings
    DIM SOURCE_STRING as STRING * 20         ‘ Create a String of 20 characters
    DIM DEST_STRING as STRING * 20           ‘ Create another String
    ' Create a WORD variable to hold the address of SOURCE_STRING
    DIM STRING_ADDR as WORD

    SOURCE_STRING = "HELLO WORLD"            ' Load the source string with characters
    ' Locate the start address of SOURCE_STRING in RAM
    STRING_ADDR = VARPTR (SOURCE_STRING)
    ' Copy 5 characters from the source string into the destination string
    DEST_STRING = RIGHT$ (STRING_ADDR , 5)
    PRINT DEST_STRING                   ' Display the result, which will be "WORLD"
    STOP
```

A third possibility for *Source String* is a LABEL name, in which case a NULL terminated Quoted String of Characters is read from a **CDATA** table.

Example 4
' Copy 5 characters from the right of a CDATA table into DEST_STRING

```
    DEVICE = 18F452                          ' Must be a 16-bit core device for Strings
    DIM DEST_STRING as STRING * 20           ‘ Create a String of 20 characters

    ' Copy 5 characters from label SOURCE into the destination string
    DEST_STRING = RIGHT$ (SOURCE , 5)
    PRINT DEST_STRING                   ' Display the result, which will be "WORLD"
    STOP

' Create a NULL terminated string of characters in code memory
SOURCE:
    CDATA "HELLO WORLD" , 0
```

See also : **Creating and using Strings, Creating and using VIRTUAL STRINGS with CDATA, CDATA, LEN, LEFT$, MID$, STR$, TOLOWER, TOUPPER VARPTR .**

RSIN

Syntax

Variable **= RSIN , {** *Timeout Label* **}**

or

RSIN { *Timeout Label* **}**, *Modifier*..*Variable* { , *Modifier*.. *Variable*...}

Overview

Receive one or more bytes from a predetermined pin at a predetermined baud rate in standard asynchronous format using 8 data bits, no parity and 1 stop bit (8N1). The pin is automatically made an input.

Operators

Modifiers may be one of the serial data modifiers explained below.
Variable can be any user defined variable.
An optional *Timeout Label* may be included to allow the program to continue if a character is not received within a certain amount of time. *Timeout* is specified in units of 1 millisecond and is specified by using a **DECLARE** directive.

Example

```
        RSIN_TIMEOUT = 2000                 ' Timeout after 2 seconds
        DIM VAR1 AS BYTE
        DIM WRD AS WORD
        VAR1 = RSIN , {Label}
        RSIN VAR1 , WRD
        RSIN { Label } , VAR1 , WRD

Label: { do something when timed out }
```

Declares

There are four **DECLARES** for use with **RSIN**. These are : -

DECLARE RSIN_PIN PORT **.** PIN
Assigns the Port and Pin that will be used to input serial data by the **RSIN** command. This may be any valid port on the PICmicro^{tm}.

If the **DECLARE** is not used in the program, then the default Port and Pin is PORTB.1.

DECLARE RSIN_MODE INVERTED , **TRUE** or 1 , 0
Sets the serial mode for the data received by **RSIN**. This may be inverted or true. Alternatively, a value of 1 may be substituted to represent inverted, and 0 for true.

If the **DECLARE** is not used in the program, then the default mode is INVERTED.

DECLARE SERIAL_BAUD 0 to 65535 bps (baud)
Informs the **RSIN** and **RSOUT** routines as to what baud rate to receive and transmit data.

Virtually any baud rate may be transmitted and received, but there are standard bauds: -

300, 600, 1200, 2400, 4800, 9600, and 19200.

When using a 4MHz crystal, the highest baud rate that is reliably achievable is 9600. However, an increase in the oscillator speed allows higher baud rates to be achieved, including 38400 baud.

If the **DECLARE** is not used in the program, then the default baud is 9600.

DECLARE RSIN_TIMEOUT 0 to 65535 milliseconds (ms)
Sets the time, in milliseconds, that **RSIN** will wait for a start bit to occur.

RSIN waits in a tight loop for the presence of a start bit. If no timeout value is used, then it will wait forever. The **RSIN** command has the option of jumping out of the loop if no start bit is detected within the time allocated by timeout.

If the **DECLARE** is not used in the program, then the default timeout value is 10000ms or 10 seconds.

RSIN MODIFIERS.
As we already know, **RSIN** will wait for and receive a single byte of data, and store it in a variable . If the PICmicro^{tm} were connected to a PC running a terminal program and the user pressed the "A" key on the keyboard, after the **RSIN** command executed, the variable would contain 65, which is the ASCII code for the letter "A"

What would happen if the user pressed the "1" key? The result would be that the variable would contain the value 49 (the ASCII code for the character "1"). This is an important point to remember: every time you press a character on the keyboard, the computer receives the ASCII value of that character. It is up to the receiving side to interpret the values as necessary. In this case, perhaps we actually wanted the variable to end up with the value 1, rather than the ASCII code 49.

The **RSIN** command provides a modifier, called the decimal modifier, which will interpret this for us. Look at the following code: -

```
DIM SERDATA AS BYTE
RSIN DEC SERDATA
```

Notice the decimal modifier in the **RSIN** command that appears just to the left of the SERDATA variable. This tells **RSIN** to convert incoming text representing decimal numbers into true decimal form and store the result in SERDATA. If the user running the terminal software pressed the "1", "2" and then "3" keys followed by a space or other non-numeric text, the value 123 will be stored in the variable SERDATA, allowing the rest of the program to perform any numeric operation on the variable.

Without the decimal modifier, however, you would have been forced to receive each character ("1", "2" and "3") separately, and then would still have to do some manual conversion to arrive at the number 123 (one hundred twenty three) before you can do the desired calculations on it.

The decimal modifier is designed to seek out text that represents decimal numbers. The characters that represent decimal numbers are the characters "0" through "9". Once the **RSIN** command is asked to use the decimal modifier for a particular variable, it monitors the incoming serial data, looking for the first decimal character. Once it finds the first decimal character, it will continue looking for more (accumulating the entire multi-digit number) until is finds a non-decimal numeric character. Remember that it will not finish until it finds at least one decimal character followed by at least one non-decimal character.

To illustrate this further, examine the following examples (assuming we're using the same code example as above): -

Serial input: "ABC"
Result: The program halts at the **RSIN** command, continuously waiting for decimal text.

Serial input: "123" (with no characters following it)
Result: The program halts at the **RSIN** command. It recognises the characters "1", "2" and "3" as the number one hundred twenty three, but since no characters follow the "3", it waits continuously, since there's no way to tell whether 123 is the entire number or not.

Serial input: "123" (followed by a space character)
Result: Similar to the above example, except once the space character is received, the program knows the entire number is 123, and stores this value in SERDATA. The **RSIN** command then ends, allowing the next line of code to run.

Serial input: "123A"
Result: Same as the example above. The "A" character, just like the space character, is the first non-decimal text after the number 123, indicating to the program that it has received the entire number.

Serial input: "ABCD123EFGH"
Result: Similar to examples 3 and 4 above. The characters "ABCD" are ignored (since they're not decimal text), the characters "123" are evaluated to be the number 123 and the following character, "E", indicates to the program that it has received the entire number.

The final result of the **DEC** modifier is limited to 16 bits (up to the value 65535). If a value larger than this is received by the decimal modifier, the end result will be incorrect because the result rolled-over the maximum 16-bit value. Therefore, **RSIN** modifiers may not (at this time) be used to load **DWORD** (32-bit) variables.

The decimal modifier is only one of a family of conversion modifiers available with **RSIN** See below for a list of available conversion modifiers. All of the conversion modifiers work similar to the decimal modifier (as described above). The modifiers receive bytes of data, waiting for the first byte that falls within the range of characters they accept (e.g., "0" or "1" for binary, "0" to "9" for decimal, "0" to "9" and "A" to "F" for hex. Once they receive a numeric character, they keep accepting input until a non-numeric character arrives, or in the case of the fixed length modifiers, the maximum specified number of digits arrives.

While very effective at filtering and converting input text, the modifiers aren't completely foolproof. As mentioned before, many conversion modifiers will keep accepting text until the first non-numeric text arrives, even if the resulting value exceeds the size of the variable. After **RSIN**, a **BYTE** variable will contain the lowest 8 bits of the value entered and a **WORD** (16-bits) would contain the lowest 16 bits. You can control this to some degree by using a modifier that specifies the number of digits, such as **DEC2**, which would accept values only in the range of 0 to 99.

Conversion Modifier	**Type of Number Numeric**	**Characters Accepted**
DEC{1..10}	Decimal, optionally limited to 1 - 10 digits	0 through 9
HEX{1..8}	Hexadecimal, optionally limited to 1 - 8 digits	0 through 9, A through F
BIN{1..32}	Binary, optionally limited to 1 - 32 digits	0, 1

A variable preceded by **BIN** will receive the ASCII representation of its binary value.
For example, if **BIN** VAR1 is specified and "1000" is received, VAR1 will be set to 8.

A variable preceded by **DEC** will receive the ASCII representation of its decimal value.
For example, if **DEC** VAR1 is specified and "123" is received, VAR1 will be set to 123.

A variable preceded by **HEX** will receive the ASCII representation of its hexadecimal value.
For example, if **HEX** VAR1 is specified and "FE" is received, VAR1 will be set to 254.

SKIP followed by a count will skip that many characters in the input stream.
For example, **SKIP** 4 will skip 4 characters.

The **RSIN** command can be configured to wait for a specified sequence of characters before it retrieves any additional input. For example, suppose a device attached to the PICmicro^{tm} is known to send many different sequences of data, but the only data you wish to observe happens to appear right after the unique characters, "XYZ". A modifier named **WAIT** can be used for this purpose: -

```
RSIN WAIT( "XYZ" ) , SERDATA
```

The above code waits for the characters "X", "Y" and "Z" to be received, in that order, then it receives the next data byte and places it into variable SERDATA.

STR modifier.
The **RSIN** command also has a modifier for handling a string of characters, named **STR**.

The **STR** modifier is used for receiving a string of characters into a byte array variable.

A string is a set of characters that are arranged or accessed in a certain order. The characters "ABC" would be stored in a string with the "A" first, followed by the "B" then followed by the "C". A byte array is a similar concept to a string; it contains data that is arranged in a certain order. Each of the elements in an array is the same size. The string "ABC" would be stored in a byte array containing three bytes (elements).

Below is an example that receives ten bytes and stores them in the 10-byte array, SERSTRING: -

```
DIM SerString[10] AS BYTE       ' Create a 10-byte array.
RSIN STR SerString              ' Fill the array with received data.
PRINT STR SerString             ' Display the string.
```

If the amount of received characters is not enough to fill the entire array, then a formatter may be placed after the array's name, which will only receive characters until the specified length is reached. For example: -

```
DIM SerString[10] AS BYTE       ' Create a 10-byte array.
RSIN STR SerString\5            ' Fill the first 5-bytes of the array
PRINT STR SerString\5           ' Display the 5-character string.
```

The example above illustrates how to fill only the first *n* bytes of an array, and then how to display only the first *n* bytes of the array. *n* refers to the value placed after the backslash.

Because of its complexity, serial communication can be rather difficult to work with at times. Using the guidelines below when developing a project using the **RSIN** and RSOUT commands may help to eliminate some obvious errors: -

Always build your project in steps.
Start with small, manageable pieces of code, (that deal with serial communication) and test them, one individually.
Add more and more small pieces, testing them each time, as you go.
Never write a large portion of code that works with serial communication without testing its smallest workable pieces first.

Pay attention to timing.
Be careful to calculate and overestimate the amount of time, operations should take within the PICmicro^{tm} for a given oscillator frequency. Misunderstanding the timing constraints is the source of most problems with code that communicate serially. If the serial communication in your project is bi-directional, the above statement is even more critical.

Pay attention to wiring.
Take extra time to study and verify serial communication wiring diagrams. A mistake in wiring can cause strange problems in communication, or no communication at all. Make sure to connect the ground pins (Vss) between the devices that are communicating serially.

Verify port setting on the PC and in the RSIN / RSOUT commands.
Unmatched settings on the sender and receiver side will cause garbled data transfers or no data transfers. This is never more critical than when a line transceiver is used(i.e. MAX232). Always remember that a line transceiver inverts the serial polarity.
If the serial data received is unreadable, it is most likely caused by a baud rate setting error, or a polarity error.

If receiving data from another device that is not a PICmicro^{tm}, try to use baud rates of 9600 and below, or alternatively, use a higher frequency crystal.

Because of additional overheads in the PICmicro^{tm}, and the fact that the **RSIN** command offers no hardware receive buffer for serial communication, received data may sometimes be missed or garbled. If this occurs, try lowering the baud rate, or increasing the crystal frequency. Using simple variables (not arrays) will also increase the chance that the PICmicro^{tm} will receive the data properly.

Notes
RSIN is oscillator independent as long as the crystal frequency is declared at the top of the program. If no XTAL **DECLARE** is used, then **RSIN** defaults to a 4MHz crystal frequency for its bit timing.

See also : DECLARE, RSOUT, SERIN, SEROUT, HRSIN, HRSOUT, HSERIN, HSEROUT.

RSOUT

Syntax
RSOUT *Item* { , *Item...* }

Overview
Send one or more *Items* to a predetermined pin at a predetermined baud rate in standard asynchronous format using 8 data bits, no parity and 1 stop bit (8N1). The pin is automatically made an output.

Operators
Item may be a constant, variable, expression, or string list.
There are no operators as such, instead there are *modifiers*. For example, if an at sign'@' precedes an *Ite*m, the ASCII representation for each digit is transmitted.

The modifiers are listed below: -

Modifier	**Operation**
AT ypos,xpos	Position the cursor on a serial LCD
CLS	Clear a serial LCD (also creates a 30ms delay)
BIN{1..32}	Send binary digits
DEC{1..10}	Send decimal digits
HEX{1..8}	Send hexadecimal digits
SBIN{1..32}	Send signed binary digits
SDEC{1..10}	Send signed decimal digits
SHEX{1..8}	Send signed hexadecimal digits
IBIN{1..32}	Send binary digits with a preceding '%' identifier
IDEC{1..10}	Send decimal digits with a preceding '#' identifier
IHEX{1..8}	Send hexadecimal digits with a preceding '$' identifier
ISBIN{1..32}	Send signed binary digits with a preceding '%' identifier
ISDEC{1..10}	Send signed decimal digits with a preceding '#' identifier
ISHEX{1..8}	Send signed hexadecimal digits with a preceding '$' identifier
REP c\n	Send character c repeated n times
STR array\n	Send all or part of an array
CSTR cdata	Send string data defined in a CDATA statement.

The numbers after the **BIN**, **DEC**, and **HEX** modifiers are optional. If they are omitted, then the default is all the digits that make up the value will be displayed.

If a floating point variable is to be displayed, then the digits after the **DEC** modifier determine how many remainder digits are send. i.e. numbers after the decimal point.

```
DIM FLT AS FLOAT
FLT = 3.145
RSOUT DEC2 FLT          ' Send 2 values after the decimal point
```

The above program will send 3.14

If the digit after the **DEC** modifier is omitted, then 3 values will be displayed after the decimal point.

```
DIM FLT AS FLOAT
FLT = 3.1456
RSOUT DEC FLT            ' Send 3 values after the decimal point
```

The above program will send 3.145

There is no need to use the **SDEC** modifier for signed floating point values, as the compiler's **DEC** modifier will automatically display a minus result: -

```
DIM FLT AS FLOAT
FLT = -3.1456
RSOUT DEC FLT            ' Send 3 values after the decimal point
```

The above program will send -3.145

HEX or **BIN** modifiers cannot be used with floating point values or variables.

The Xpos and Ypos values in the **AT** modifier both start at 1. For example, to place the text "HELLO WORLD" on line 1, position 1, the code would be: -

```
RSOUT AT 1 , 1 , "HELLO WORLD"
```

Example 1

```
DIM VAR1 AS BYTE
DIM WRD AS WORD
DIM DWD AS DWORD

RSOUT "Hello World"             ' Display the text "Hello World"
RSOUT "VAR1= " , DEC VAR1       ' Display the decimal value of VAR1
RSOUT "VAR1= " , HEX VAR1       ' Display the hexadecimal value of VAR1
RSOUT "VAR1= " , BIN VAR1       ' Display the binary value of VAR1
RSOUT "VAR1= " , @VAR1          ' Display the decimal value of VAR1
RSOUT "DWD= " , HEX6 DWD        ' Display 6 hex characters of a DWORD type variable
```

Example 2

```
' Display a negative value on a serial LCD.
SYMBOL NEGATIVE = -200
RSOUT AT 1 , 1 , SDEC NEGATIVE
```

Example 3

```
' Display a negative value on a serial LCD with a preceding identifier.
RSOUT AT 1 , 1 , ISHEX -$1234
```

Example 3 will produce the text "$-1234" on the LCD.

Some PICmicros such as the 16F87x, and 18FXXX range have the ability to read and write to their own flash memory. And although writing to this memory too many times is unhealthy for the PICmicro^{tm}, reading this memory is both fast, and harmless. Which offers a unique form of data storage and retrieval, the **CDATA** command proves this, as it uses the mechanism of reading and storing in the PICmicro's flash memory.

Combining the unique features of the ‘self modifying PICmicro's' with a string format, the compiler is capable of reducing the overhead of printing, or transmitting large amounts of text data.

The **CSTR** modifier may be used in commands that deal with text processing i.e. **SEROUT**, **HRSOUT**, and **PRINT** etc.

The **CSTR** modifier is used in conjunction with the **CDATA** command. The **CDATA** command is used for initially creating the string of characters: -

```
STRING1: CDATA "HELLO WORLD" , 0
```

The above line of case will create, in flash memory, the values that make up the ASCII text "HELLO WORLD", at address STRING1. Note the NULL terminator after the ASCII text.

NULL terminated means that a zero (NULL) is placed at the end of the string of ASCII characters to signal that the string has finished.

To display, or transmit this string of characters, the following command structure could be used:

```
RSOUT CSTR STRING1
```

The label that declared the address where the list of CDATA values resided, now becomes the string's name. In a large program with lots of text formatting, this type of structure can save quite literally hundreds of bytes of valuable code space.

Try both these small programs, and you'll see that using **CSTR** saves a few bytes of code: -

First the standard way of displaying text: -

```
DEVICE 16F877
CLS
RSOUT "HELLO WORLD"
RSOUT "HOW ARE YOU?"
RSOUT "I AM FINE!"
STOP
```

Now using the **CSTR** modifier: -

```
CLS
RSOUT CSTR TEXT1
RSOUT CSTR TEXT2
RSOUT CSTR TEXT3
STOP

TEXT1: CDATA "HELLO WORLD" , 13, 0
TEXT2: CDATA "HOW ARE YOU?" , 13, 0
TEXT3: CDATA "I AM FINE!" , 13, 0
```

Again, note the NULL terminators after the ASCII text in the CDATA commands. Without these, the PICmicro^{tm} will continue to transmit data in an endless loop.

The term 'virtual string' relates to the fact that a string formed from the CDATA command cannot be written too, but only read from.

The **STR** modifier is used for sending a string of bytes from a byte array variable. A string is a set of bytes sized values that are arranged or accessed in a certain order.

The values 1, 2, 3 would be stored in a string with the value 1 first, followed by 2 then followed by the value 3. A byte array is a similar concept to a string; it contains data that is arranged in a certain order. Each of the elements in an array is the same size. The string 1,2,3 would be stored in a byte array containing three bytes (elements).

Below is an example that displays four bytes (from a byte array): -

```
DIM MYARRAY[10] AS BYTE         ' Create a 10-byte array.
MYARRAY [0] = "H"               ' Load the first 5 bytes of the array
MYARRAY [1] = "E"               ' With the data to send
MYARRAY [2] = "L"
MYARRAY [3] = "L"
MYARRAY [4] = "O"
RSOUT STR MYARRAY \5            ' Display a 5-byte string.
```

Note that we use the optional \n argument of **STR**. If we didn't specify this, the PICmicro^{tm} would try to keep sending characters until all 10 bytes of the array were transmitted. Since we do not wish all 10 bytes to be transmitted, we chose to tell it explicitly to only send the first 5 bytes.

The above example may also be written as: -

```
DIM MYARRAY [10] AS BYTE        ' Create a 10-byte array.
STR MYARRAY = "HELLO"           ' Load the first 5 bytes of the array
RSOUT STR MYARRAY \5            ' Send 5-byte string.
```

The above example, has exactly the same function as the previous one. The only difference is that the string is now constructed using **STR** as a command instead of a modifier.

Declares
There are four **DECLARES** for use with **RSOUT**. These are : -

DECLARE RSOUT_PIN PORT **.** PIN
Assigns the Port and Pin that will be used to output serial data from the **RSOUT** command. This may be any valid port on the PICmicro^{tm}.

If the **DECLARE** is not used in the program, then the default Port and Pin is PORTB.0.

DECLARE RSOUT_MODE INVERTED , **TRUE** or 1 , 0
Sets the serial mode for the data transmitted by **RSOUT**. This may be inverted or true. Alternatively, a value of 1 may be substituted to represent inverted, and 0 for true.

If the **DECLARE** is not used in the program, then the default mode is INVERTED.

DECLARE SERIAL_BAUD 0 to 65535 bps (baud)
Informs the **RSIN** and **RSOUT** routines as to what baud rate to receive and transmit data.

Virtually any baud rate may be transmitted and received, but there are standard bauds: -

300, 600, 1200, 2400, 4800, 9600, and 19200.

When using a 4MHz crystal, the highest baud rate that is reliably achievable is 9600. However, an increase in the oscillator speed allows higher baud rates to be achieved, including 38400 baud.

If the **DECLARE** is not used in the program, then the default baud is 9600.

DECLARE RSOUT_PACE 0 to 65535 microseconds (us)
Implements a delay between characters transmitted by the **RSOUT** command.

On occasion, the characters transmitted serially are in a stream that is too fast for the receiver to catch, this results in missed characters. To alleviate this, a delay may be implemented between each individual character transmitted by **RSOUT**.

If the **DECLARE** is not used in the program, then the default is no delay between characters.

Notes
RSOUT is oscillator independent as long as the crystal frequency is declared at the top of the program. If no declare is used, then **RSOUT** defaults to a 4MHz crystal frequency for its bit timing.

The **AT** and **CLS** modifiers are primarily intended for use with serial LCD modules. Using the following command sequence will first clear the LCD, then display text at position 5 of line 2: -

```
RSOUT CLS , AT 2 , 5 , "HELLO WORLD"
```

The values after the **AT** modifier may also be variables.

See also : **DECLARE, RSIN , SERIN, SEROUT, HRSIN, HRSOUT, HSERIN, HSEROUT.**

SEED

Syntax
SEED *Value*

Overview
Seed the random number generator, in order to obtain a more random result.

Operators
Value can be a variable, constant or expression, with a value from 1 to 65535. A value of $0345 is a good starting point.

Example

```
        ' Create and display a RANDOM number
        DEVICE = 16F877
        XTAL = 4
        DIM RND AS WORD

        SEED $0345
        CLS
AGAIN:
        RND = RANDOM
        PRINT AT 1,1,DEC RND, "     "
        DELAYMS 500
        GOTO AGAIN
```

See also: **RANDOM.**

SELECT..CASE..ENDSELECT

Syntax

```
SELECT Expression

        CASE Condition(s)
                Instructions
        {
        CASE Condition(s)
                Instructions

        CASE ELSE
                Statement(s)
                                }
ENDSELECT
```

The curly braces signify optional conditions.

Overview
Evaluate an *Expression* then continually execute a block of BASIC code based upon comparisons to *Condition(s)*. After executing a block of code, the program continues at the line following the **ENDCASE**. If no conditions are found to be True and a **CASE ELSE** block is included, the code after the **CASE ELSE** leading to the **ENDSELECT** will be executed.

Operators
Expression can be any valid variable, constant, expression or inline command that will be compared to the *Conditions*.
Condition(s) is a statement that can evaluate as True or False. The Condition can be a simple or complex relationship, as described below. Multiple conditions within the same **CASE** can be separated by commas.
Instructions can be any valid BASIC command that will be operated on if the **CASE** condition produces a True result.

Example
' Load variable RESULT according to the contents of variable VAR1
' Result will return a value of 255 if no valid condition was met

```
        INCLUDE "PROTON_4.INC"      ' Use the PROTON development board for the demo
        DIM VAR1 AS BYTE
        DIM RESULT AS BYTE

        DELAYMS 300                 ' Wait for PICmicro to stabilise
        CLS                         ' Clear the LCD

        RESULT = 0                  ' Clear the result variable before we start
        VAR1 = 1                    ' Variable to base the conditions upon

        SELECT VAR1

          CASE 1                    ' Is VAR1 equal to 1 ?
              RESULT = 1            ' Load RESULT with 1 if yes

          CASE 2                    ' Is VAR1 equal to 2 ?
        RESULT = 2              ' Load RESULT with 2 if yes

    CASE 3                      ' Is VAR1 equal to 3 ?
        RESULT = 3              ' Load RESULT with 3 if yes

    CASE ELSE                   ' Otherwise...
        RESULT = 255            ' Load RESULT with 255

ENDSELECT

PRINT DEC RESULT                ' Display the result
STOP
```

Notes
SELECT..CASE is simply an advanced form of the **IF..THEN..ELSEIF..ELSE** construct, in which multiple **ELSEIF** statements are executed by the use of the **CASE** command.

Taking a closer look at the **CASE** command: -

CASE *Conditional_Op Expression*

Where *Conditional_Op* can be an = operator (which is implied if absent), or one of the standard comparison operators <>, <, >, >= or <=. Multiple conditions within the same **CASE** can be separated by commas. If, for example, you wanted to run a **CASE** block based on a value being less than one or greater than nine, the syntax would look like: -

```
CASE <1, >9
```

Another way to implement CASE is: -

CASE *value1* **TO** *value2*

In this form, the valid range is from *Value1* to *Value2*, inclusive. So if you wished to run a CASE block on a value being between the values 1 AND 9 inclusive, the syntax would look like: -

```
CASE 1 TO 9
```

For those of you that are familiar with C or Java, you will know that in those languages the statements in a **CASE** block fall through to the next **CASE** block unless the keyword break is encountered. In BASIC however, the code under an executed **CASE** block jumps to the code immediately after **ENDSELECT**.

Shown below is a typical **SELECT CASE** structure with its corresponding IF..THEN equivalent code alongside.

```
SELECT VAR1

     CASE 6, 9, 99, 66
    ' IF VAR1 = 6 OR VAR1 = 9 OR VAR1 = 99 OR VAR1 = 66 THEN
    PRINT "OR VALUES"

    CASE 110 TO 200
    ' ELSEIF VAR1 >= 110 AND VAR1 <= 200 THEN
```

```
        PRINT "AND VALUES"

        CASE 100
        ' ELSEIF VAR1 = 100 THEN
        PRINT "EQUAL VALUE"

        CASE >300
        ' ELSEIF VAR1 > 300 THEN
        PRINT "GREATER VALUE"

        CASE ELSE
        ' ELSE
        PRINT "DEFAULT VALUE"

    ENDSELECT
   ' ENDIF
```

See also : **IF..THEN..ELSEIF..ELSE..ENDIF.**

SERIN

Syntax
SERIN *Rpin* { **** *Fpin* } , *Baudmode* , { *Plabel*, } { *Timeout* , *Tlabel*, } **[** InputData **]**

Overview
Receive asynchronous serial data (i.e. RS232 data).

Operators
Rpin is a PORT.BIT constant that specifies the I/O pin through which the serial data will be received. This pin will be set to input mode.
Fpin is an optional PORT.BIT constant that specifies the I/O pin to indicate flow control status on. This pin will be set to output mode.
Baudmode may be a variable, constant, or expression (0 - 65535) that specifies serial timing and configuration.
Plabel is an optional label indicating where the program should jump to in the event of a parity error. This argument should only be provided if *Baudmode* indicates that parity is required.
Timeout is an optional constant (0 - 65535) that informs **SERIN** how long to wait for incoming data. If data does not arrive in time, the program will jump to the address specified by *Tlabl*e.
Tlabel is an optional label that must be provided along with *Timeou*t, indicating where the program should go in the event that data does not arrive within the period specified by *Timeou*t.
InputData is list of variables and modifiers that informs **SERIN** what to do with incoming data. **SERIN** may store data in a variable, array, or an array string using the **STR** modifier.

Notes
One of the most popular forms of communication between electronic devices is serial communication. There are two major types of serial communication; asynchronous and synchronous. The **RSIN**, **RSOUT**, **SERIN** and **SEROUT** commands are all used to send and receive asynchronous serial data. While the **SHIN** and **SHOUT** commands are for use with synchronous communications.

The term asynchronous means ‘no clock.’ More specifically, ‘asynchronous serial communication’ means data is transmitted and received without the use of a separate ‘clock’ line. Data can be sent using as few as two wires; one for data and one for ground. The PC's serial ports (also called COM ports or RS232 ports) use asynchronous serial communication. Note: the other kind of serial communication, synchronous, uses at least three wires; one for clock, one for data and one for ground.

RS232 is the electrical specification for the signals that PC serial ports use. Unlike standard TTL logic, where 5 volts is a logic 1 and 0 volts is logic 0, RS232 uses -12 volts for logic 1 and +12 volts for logic 0. This specification allows communication over longer wire lengths without amplification.

Most circuits that work with RS232 use a line driver / receiver (transceiver). This component does two things: -

Convert the ±12 volts of RS-232 to TTL compatible 0 to 5 volt levels.
Invert the voltage levels, so that 5 volts = logic 1 and 0 volts = logic 0.

By far, the most common line driver device is the MAX232 from Maxim semiconductor. With the addition of a few capacitors, a complete 2-way level converter is realised. Figure 1 shows a typical circuit for one of these devices. The MAX232 is not the only device available, there are other types that do not require any external capacitors at all. Visit Maxim's excellent web site at **www.maxim.com**, and download one of their many detailed datasheets.

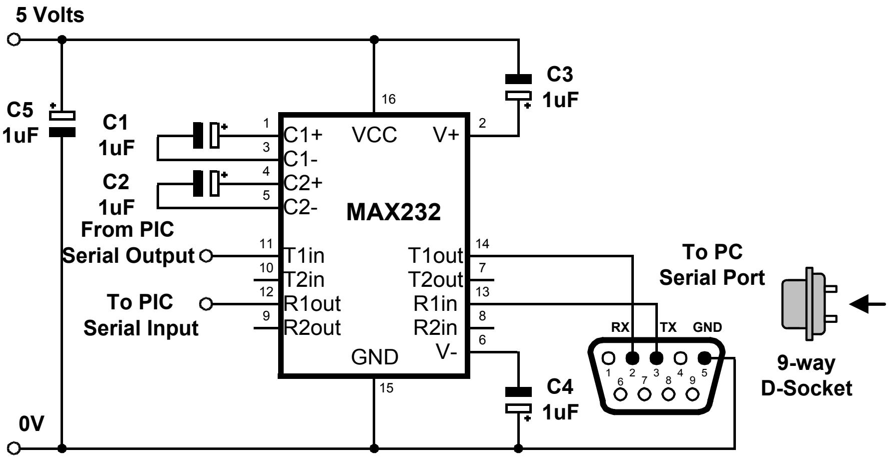
5 Volts
C5
1uF
C1
1uF
C2
1uF
From PIC
Serial Output
To PIC
Serial Input
0V
MAX232
C1+
C1-
C2+
C2-
VCC
V+
T1in
T2in
R1out
R2out
T1out
T2out
R1in
R2in
GND
V-
1
3
4
5
11
10
12
9
16
2
14
7
13
8
6
15
C3
1uF
C4
1uF
To PC
Serial Port
RX
TX
GND
1
2
3
4
5
6
7
8
9
9-way
D-Socket

Typical MAX232 RS232 line-transceiver circuit.

Because of the excellent IO capabilities of the PICmicro^{tm} range of devices, and the adoption of TTL levels on most modern PC serial ports, a line driver is often unnecessary unless long distances are involved between the transmitter and the receiver. Instead a simple current limiting resistor is all that's required. As shown below: -

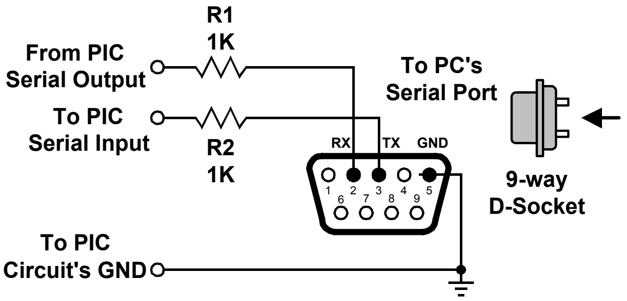
R1
1K
From PIC
Serial Output
To PIC
Serial Input
R2
1K
To PC's
Serial Port
RX
TX
GND
1
2
3
4
5
6
7
8
9
9-way
D-Socket
To PIC
Circuit's GND

Directly connected RS232 circuit.

You should remember that when using a line transceiver such as the MAX232, the serial mode (polarity) is inverted in the process of converting the signal levels, however, if using the direct connection, the mode is untouched. This is the single most common cause of errors when connecting serial devices, therefore you must make allowances for this within your software.

Asynchronous serial communication relies on precise timing. Both the sender and receiver must be set for identical timing, this is commonly expressed in bits per second (bps) called baud. **SERIN** requires a value called *Baudmode* that informs it of the relevant characteristics of the incoming serial data; the bit period, number of data and parity bits, and polarity.

The *Baudmode* argument for **SERIN** accepts a 16-bit value that determines its characteristics: 1-stop bit, 8-data bits/no-parity or 7-data bits/even-parity and virtually any speed from as low as 300 baud to greater than 57K baud (depending on the crystal frequency used). The following table shows how *Baudmode* is calculated, while table 1 shows some common *baudmodes* for standard serial baud rates.

Step 1.	**Determine the bit period. (bits 0 – 11)**	(1,000,000 / baud rate) – 20
Step 2.	**data bits and parity. (bit 13)**	8-bit/no-parity = step 1 + 0 7-bit/even-parity = step 1 + 8192
Step 3.	**Select polarity. (bit 14)**	True (noninverted) = step 2 + 0 Inverted = step 2 + 16384

Baudmode calculation.

Add the results of steps 1, 2 3, and 3 to determine the correct value for the *Baudmode* operator.

BaudRate	8-bit no-parity inverted	8-bit no-parity true	7-bit even-parity inverted	7-bit even-parity true
300	19697	3313	27889	11505
600	18030	1646	26222	9838
1200	17197	813	25389	9005
2400	16780	396	24972	8588
4800	16572	188	24764	8380
9600	16468	84	24660	8276

Table 1. Common baud rates and corresponding *Baudmode*s.

If communications are with existing software or hardware, its speed and mode will determine the choice of baud rate and mode. In general, 7-bit/even-parity (7E) mode is used for text, and 8-bit/no-parity (8N) for byte-oriented data. Note: the most common mode is 8-bit/no-parity, even when the data transmitted is just text. Most devices that use a 7-bit data mode do so in order to take advantage of the parity feature. Parity can detect some communication errors, but to use it you lose one data bit. This means that incoming data bytes transferred in 7E (even-parity) mode can only represent values from 0 to 127, rather than the 0 to 255 of 8N (no-parity) mode.

The compiler's serial commands **SERIN** and **SEROUT**, have the option of still using a parity bit with 4 to 8 data bits. This is through the use of a **DECLARE**: -

With parity disabled (the default setting): -

```
DECLARE SERIAL_DATA     4   ' Set SERIN and SEROUT data bits to 4
DECLARE SERIAL_DATA     5   ' Set SERIN and SEROUT data bits to 5
DECLARE SERIAL_DATA     6   ' Set SERIN and SEROUT data bits to 6
DECLARE SERIAL_DATA     7   ' Set SERIN and SEROUT data bits to 7
DECLARE SERIAL_DATA     8   ' Set SERIN and SEROUT data bits to 8 (default)
```

With parity enabled: -

```
DECLARE SERIAL_DATA     5   ' Set SERIN and SEROUT data bits to 4
DECLARE SERIAL_DATA     6   ' Set SERIN and SEROUT data bits to 5
DECLARE SERIAL_DATA     7   ' Set SERIN and SEROUT data bits to 6
DECLARE SERIAL_DATA     8   ' Set SERIN and SEROUT data bits to 7 (default)
DECLARE SERIAL_DATA     9   ' Set SERIN and SEROUT data bits to 8
```

SERIAL_DATA data bits may range from 4 bits to 8 (the default if no DECLARE is issued). Enabling parity uses one of the number of bits specified.

Declaring **SERIAL_DATA** as 9 allows 8 bits to be read and written along with a 9th parity bit.

Parity is a simple error-checking feature. When a serial sender is set for even parity (the mode the compiler supports) it counts the number of 1s in an outgoing byte and uses the parity bit to make that number even. For example, if it is sending the 7-bit value: %0011010, it sets the parity bit to 1 in order to make an even number of 1s (four).

The receiver also counts the data bits to calculate what the parity bit should be. If it matches the parity bit received, the serial receiver assumes that the data was received correctly. Of course, this is not necessarily true, since two incorrectly received bits could make parity seem correct when the data was wrong, or the parity bit itself could be bad when the rest of the data was correct.

Many systems that work exclusively with text use 7-bit/ even-parity mode. For example, to receive one data byte through bit-0 of PORTA at 9600 baud, 7E, inverted:

```
    SERIN PORTA.0 , 24660 , [SerData]
```

The above example will work correctly, however it doesn’t inform the program what to do in the event of a parity error.

Below, is an improved version that uses the optional *Plabel* argument:

```
    SERIN PORTA.0 , 24660 , P_ERROR , [SerData]
    PRINT DEC SerData
    STOP
P_ERROR:
    PRINT "Parity Error"
    STOP
```

If the parity matches, the program continues at the **PRINT** instruction after **SERIN**. If the parity doesn’t match, the program jumps to the label P_ERROR. Note that a parity error takes precedence over other *InputData* specifications (as soon as an error is detected, **SERIN** aborts and jumps to the *Plabel* routine).

In the examples above, the only way to end the **SERIN** instruction (other than RESET or power-off) is to give **SERIN** the serial data it needs. If no serial data arrives, the program is stuck in an endless loop. However, you can force **SERIN** to abort if it doesn’t receive data within a specified number of milliseconds.

For example, to receive a value through bit-0 of PORTA at 9600 baud, 8N, inverted and abort **SERIN** after 2 seconds (2000 ms) if no data arrives: -

```
    SERIN PORTA.0 , 16468 , 2000 , TO_ERROR , [SerData]
    PRINT CLS , DEC Result
    STOP
TO_ERROR:
    PRINT CLS , "Timed Out"
    STOP
```

If no serial data arrives within 2 seconds, **SERIN** aborts and continues at the label TO_ERROR.

Both Parity and Serial Timeouts may be combined. Below is an example to receive a value through bit-0 of PORTA at 2400 baud, 7E, inverted with a 10-second timeout: -

```
        DIM SerData AS BYTE
Again:
        SERIN PORTA.0 , 24660 , P_ERROR , 10000 , TO_ERROR , [SerData]
        PRINT CLS , DEC SerData
        GOTO Again
TO_ERROR:
        PRINT CLS , “Timed Out"
        GOTO Again
P_ERROR:
        PRINT CLS , "Parity Error"
        GOTO Again
```

When designing an application that requires serial communication between PICs, you should remember to work within these limitations: -

When the PICmicro^{tm} is sending or receiving data, it cannot execute other instructions.
When the PICmicro^{tm} is executing other instructions, it cannot send or receive data.
The compiler does not offer a serial buffer as there is in PCs. At lower crystal frequencies, and higher serial rates, the PICmicro^{tm} cannot receive data via **SERIN**, process it, and execute another **SERIN** in time to catch the next chunk of data, unless there are significant pauses between data transmissions.

These limitations can sometimes be addressed by using flow control; the *Fpin* option for **SERIN** and **SEROUT**. Through *Fpi*n, **SERIN** can inform another PICmicro^{tm} sender when it is ready to receive data. (*Fpin* flow control follows the rules of other serial handshaking schemes, however most computers other than the PICmicro^{tm} cannot start and stop serial transmission on a byte-by-byte basis. That is why this discussion is limited to communication between PICmicros.)

Below is an example using flow control with data through bit-0 of PORTA, and flow control through bit-1 of PORTA, 9600 baud, N8, noninverted: -

```
SERIN PORTA.0\PORTA.1 , 84 , [SerData]
```

When **SERIN** executes, bit-0 of PORTA *(Rpi*n) is made an input in preparation for incoming data, and bit-1 of PORTA *(Fpi*n) is made an output low, to signal “go” to the sender. After **SERIN** finishes receiving data, bit-1 of PORTA is brought high to notify the sender to stop. If an inverted *BaudMode* had been specified, the *Fpin’*s responses would have been reversed. The table below illustrates the relationship of serial polarity to *Fpin* states.

Serial Polarity	Ready to Receive ("Go")	Not Ready to Receive ("Stop")
Inverted	*Fpin* is High (1)	*Fpin* is Low (0)
Non-inverted	*Fpin* is Low (0)	*Fpin* is High (1)

See the following circuit for a flow control example using two 16F84 devices. In the demonstration program example, the sender transmits the whole word “HELLO!” in approx 6 ms. The receiver catches the first byte at most; by the time it got back from the first 1-second delay (**DELAYMS** 1000), the rest of the data would be long gone. With flow control, communication is flawless since the sender waits for the receiver to catch up.

In the circuit below, the flow control pin (PORTA.1) is pulled to ground through a 10k□ resistor. This is to ensure that the sender sees a stop signal (0 for inverted communications) when the receiver is first powered up.

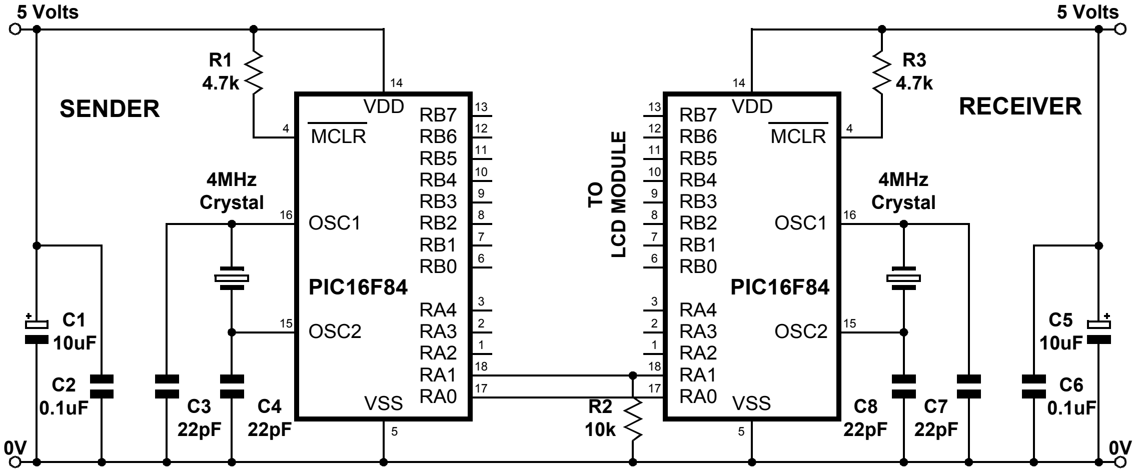
5 Volts
5 Volts
SENDER
RECEIVER
R1
4.7k
R3
4.7k
VDD
MCLR
OSC1
OSC2
VSS
PIC16F84
RB7
RB6
RB5
RB4
RB3
RB2
RB1
RB0
RA4
RA3
RA2
RA1
RA0
4MHz
Crystal
4MHz
Crystal
TO
LCD MODULE
C1
10uF
C2
0.1uF
C3
22pF
C4
22pF
C5
10uF
C6
0.1uF
C7
22pF
C8
22pF
R2
10k
0V
0V

Communicating Communication between two PICs using flow control.

```
‘ SENDER CODE. Program into the SENDER PICmicro.
Loop:
        SEROUT PORTA.0\PORTA.1 , 16468 , [ "HELLO!" ]  ' Send the message.
        DELAYMS 2500                                   ‘ Delay for 2.5 seconds
        GOTO Loop                                      ‘ Repeat the message forever

‘ RECEIVER CODE. Program into the RECEIVER PICmicro.
        DIM Message AS BYTE
Again:
        SERIN PORTA.0\PORTA.1 , 16468 , [Message]      ' Get 1 byte.
        PRINT Message                                  ' Display the byte on LCD.
        DELAYMS 1000                                   ' Delay for 1 second.
        GOTO Again                                     ‘ Repeat forever
```

SERIN Modifiers.

The **SERIN** command can be configured to wait for a specified sequence of characters before it retrieves any additional input. For example, suppose a device attached to the PICmicro^{tm} is known to send many different sequences of data, but the only data you wish to observe happens to appear right after the unique characters, “XYZ”. A modifier named **WAIT** can be used for this purpose: -

```
        SERIN PORTA.0 , 16468, [ WAIT( "XYZ" ) , SERDATA]
```

The above code waits for the characters “X”, “Y” and “Z” to be received, in that order, then it receives the next data byte and p[laces it into variable SERDATA.

The compiler also has a modifier for handling a string of characters, named **STR**.

The **STR** modifier is used for receiving a string of characters into a byte array variable.

A string is a set of characters that are arranged or accessed in a certain order. The characters "ABC" would be stored in a string with the "A" first, followed by the "B" then followed by the "C". A byte array is a similar concept to a string; it contains data that is arranged in a certain order. Each of the elements in an array is the same size. The string "ABC" would be stored in a byte array containing three bytes (elements).

Below is an example that receives ten bytes through bit-0 of PORTA at 9600 bps, N81/inverted, and stores them in the 10-byte array, SERSTRING: -

```
DIM SerString[10] AS BYTE                   ' Create a 10-byte array.
SERIN PORTA.0 , 16468, [ STR SerString ]    ' Fill the array with received data.
PRINT STR SerString                         ' Display the string.
```

If the amount of received characters is not enough to fill the entire array, then a formatter may be placed after the array's name, which will only receive characters until the specified length is reached. For example: -

```
DIM SerString[10] AS BYTE                   ' Create a 10-byte array.
SERIN PORTA.0 , 16468, [ STR SerString\5 ]  ' Fill the first 5-bytes of the array
PRINT STR SerString\5                       ' Display the 5-character string.
```

The example above illustrates how to fill only the first *n* bytes of an array, and then how to display only the first *n* bytes of the array. *n* refers to the value placed after the backslash.

Because of its complexity, serial communication can be rather difficult to work with at times. Using the guidelines below when developing a project using the **SERIN** and **SEROUT** commands may help to eliminate some obvious errors: -

Always build your project in steps.
Start with small, manageable pieces of code, (that deal with serial communication) and test them, one individually.
Add more and more small pieces, testing them each time, as you go.
Never write a large portion of code that works with serial communication without testing its smallest workable pieces first.
Pay attention to timing.
Be careful to calculate and overestimate the amount of time, operations should take within the PICmicro^{tm} for a given oscillator frequency. Misunderstanding the timing constraints is the source of most problems with code that communicate serially. If the serial communication in your project is bi-directional, the above statement is even more critical.
Pay attention to wiring.
Take extra time to study and verify serial communication wiring diagrams. A mistake in wiring can cause strange problems in communication, or no communication at all. Make sure to connect the ground pins (Vss) between the devices that are communicating serially.
Verify port setting on the PC and in the SERIN / SEROUT commands.
Unmatched settings on the sender and receiver side will cause garbled data transfers or no data transfers. This is never more critical than when a line transceiver is used(i.e. MAX232). Always remember that a line transceiver inverts the serial polarity.

If the serial data received is unreadable, it is most likely caused by a baud rate setting error, or a polarity error. If receiving data from another device that is not a PICmicro^{tm}, try to use baud rates of 9600 and below, or alternatively, use a higher frequency crystal.

Because of additional overheads in the PICmicro^{tm}, and the fact that the **SERIN** command offers no hardware receive buffer for serial communication, received data may sometimes be missed or garbled. If this occurs, try lowering the baud rate, or increasing the crystal frequency. Using simple variables (not arrays) will also increase the chance that the PICmicro^{tm} will receive the data properly.

See also : HRSIN, HRSOUT, HSERIN, HSEROUT, RSIN, RSOUT.

SEROUT

Syntax

SEROUT *Tpin* { \ *Fpin* } , *Baudmode* , { *Pace*, } { *Timeout* , *Tlabel*, } **[** OutputData **]**

Overview

Transmit asynchronous serial data (i.e. RS232 data).

Operators

Tpin is a PORT.BIT constant that specifies the I/O pin through which the serial data will be transmitted. This pin will be set to output mode while operating. The state of this pin when finished is determined by the driver bit in *Baudmode*.

Fpin is an optional PORT.BIT constant that specifies the I/O pin to monitor for flow control status. This pin will be set to input mode. Note: *Fpin* must be specified in order to use the optional *Timeout* and *Tlabel* operators in the **SEROUT** command.

Baudmode may be a variable, constant, or expression (0 - 65535) that specifies serial timing and configuration.

Pace is an optional variable, constant, or expression (0 - 65535) that determines the length of the delay between transmitted bytes. Note: *Pace* cannot be used simultaneously with *Timeou*t.

Timeout is an optional variable or constant (0 - 65535) that informs **SEROUT** how long to wait for *Fpin* permission to send. If permission does not arrive in time, the program will jump to the address specified by *Tlabl*e. NOTE: *Fpin* must be specified in order to use the optional *Timeout* and *Tlabel* operators in the **SEROUT** command.

Tlabel is an optional label that must be provided along with *Timeout. Tlabel* indicates where the program should jump to in the event that permission to send data is not granted within the period specified by *Timeou*t.

OutputData is list of variables, constants, expressions and modifiers that informs **SEROUT** how to format outgoing data. **SEROUT** can transmit individual or repeating bytes, convert values into decimal, hex or binary text representations, or transmit strings of bytes from variable arrays, and **CDATA** constructs. These actions can be combined in any order in the *OutputData* list.

Notes

One of the most popular forms of communication between electronic devices is serial communication. There are two major types of serial communication; asynchronous and synchronous. The RSIN, RSOUT, SERIN and **SEROUT** commands are all used to send and receive asynchronous serial data. While the **SHIN** and **SHOUT** commands are for use with synchronous communications.

The term asynchronous means ‘no clock.' More specifically, ‘asynchronous serial communication' means data is transmitted and received without the use of a separate ‘clock' line. Data can be sent using as few as two wires; one for data and one for ground. The PC's serial ports (also called COM ports or RS232 ports) use asynchronous serial communication. Note: the other kind of serial communication, synchronous, uses at least three wires; one for clock, one for data and one for ground.

RS232 is the electrical specification for the signals that PC serial ports use. Unlike standard TTL logic, where 5 volts is a logic 1 and 0 volts is logic 0, RS232 uses -12 volts for logic 1 and +12 volts for logic 0. This specification allows communication over longer wire lengths without amplification.

Most circuits that work with RS232 use a line driver / receiver (transceiver). This component does two things: -

Convert the ±12 volts of RS-232 to TTL compatible 0 to 5 volt levels.
Invert the voltage levels, so that 5 volts = logic 1 and 0 volts = logic 0.

By far, the most common line driver device is the MAX232 from MAXIM semiconductor. With the addition of a few capacitors, a complete 2-way level converter is realised (see **SERIN** for circuit).

The MAX232 is not the only device available, there are other types that do not require any external capacitors at all. Visit Maxim's excellent web site at **www.maxim.com <http://www.maxim.com>**, and download one of their many detailed datasheets.

Because of the excellent IO capabilities of the PICmicro^{tm} range of devices, and the adoption of TTL levels on most modern PC serial ports, a line driver is often unnecessary unless long distances are involved between the transmitter and the receiver. Instead a simple current limiting resistor is all that's required (see **SERIN** for circuit).

You should remember that when using a line transceiver such as the MAX232, the serial mode (polarity) is inverted in the process of converting the signal levels, however, if using the direct connection, the mode is untouched. This is the single most common cause of errors when connecting serial devices, therefore you must make allowances for this within your software.

Asynchronous serial communication relies on precise timing. Both the sender and receiver must be set for identical timing, this is commonly expressed in bits per second (bps) called baud. **SEROUT** requires a value called *Baudmode* that informs it of the relevant characteristics of the incoming serial data; the bit period, number of data and parity bits, and polarity.

The *Baudmode* argument for **SEROUT** accepts a 16-bit value that determines its characteristics: 1-stop bit, 8-data bits/no-parity or 7-data bits/even-parity and virtually any speed from as low as 300 baud to greater than 38K baud (depending on the crystal frequency used). Table 2 below shows how *Baudmode* is calculated, while table 3 shows some common *baudmodes* for standard serial baud rates.

Step 1.	**Determine the bit period. (bits 0 – 11)**	(1,000,000 / baud rate) – 20
Step 2.	**data bits and parity. (bit 13)**	8-bit/no-parity = step 1 + 0 7-bit/even-parity = step 1 + 8192
Step 3.	**Select polarity. (bit 14)**	True (noninverted) = step 2 + 0 Inverted = step 2 + 16384

Baudmode calculation.

Add the results of steps 1, 2 3, and 3 to determine the correct value for the *Baudmode* operator

BaudRate	8-bit no-parity inverted	8-bit no-parity true	7-bit even-parity inverted	7-bit even-parity true
300	19697	3313	27889	11505
600	18030	1646	26222	9838
1200	17197	813	25389	9005
2400	16780	396	24972	8588
4800	16572	188	24764	8380
9600	16468	84	24660	8276

Note
For 'open' baudmodes used in networking, add 32768 to the values from the previous table.

If communications are with existing software or hardware, its speed and mode will determine the choice of baud rate and mode. In general, 7-bit/even-parity (7E) mode is used for text, and 8-bit/no-parity (8N) for byte-oriented data. Note: the most common mode is 8-bit/no-parity, even when the data transmitted is just text. Most devices that use a 7-bit data mode do so in order to take advantage of the parity feature. Parity can detect some communication errors, but to use it you lose one data bit. This means that incoming data bytes transferred in 7E (even-parity) mode can only represent values from 0 to 127, rather than the 0 to 255 of 8N (no-parity) mode.

The compiler's serial commands **SEROUT** and **SERIN**, have the option of still using a parity bit with 4 to 8 data bits. This is through the use of a **DECLARE**: -

With parity disabled (the default setting): -

```
DECLARE SERIAL_DATA 4       ' Set SEROUT and SERIN data bits to 4
DECLARE SERIAL_DATA 5       ' Set SEROUT and SERIN data bits to 5
DECLARE SERIAL_DATA 6       ' Set SEROUT and SERIN data bits to 6
DECLARE SERIAL_DATA 7       ' Set SEROUT and SERIN data bits to 7
DECLARE SERIAL_DATA 8       ' Set SEROUT and SERIN data bits to 8 (default)
```

With parity enabled: -

```
DECLARE SERIAL_DATA 5       ' Set SEROUT and SERIN data bits to 4
DECLARE SERIAL_DATA 6       ' Set SEROUT and SERIN data bits to 5
DECLARE SERIAL_DATA 7       ' Set SEROUT and SERIN data bits to 6
DECLARE SERIAL_DATA 8       ' Set SEROUT and SERIN data bits to 7 (default)
DECLARE SERIAL_DATA 9       ' Set SEROUT and SERIN data bits to 8
```

SERIAL_DATA data bits may range from 4 bits to 8 (the default if no **DECLARE** is issued). Enabling parity uses one of the number of bits specified.

Declaring **SERIAL_DATA** as 9 allows 8 bits to be read and written along with a 9th parity bit.

Parity is a simple error-checking feature. When the **SEROUT** command's *Baudmode* is set for even parity (compiler default) it counts the number of 1s in the outgoing byte and uses the parity bit to make that number even. For example, if it is sending the 7-bit value: %0011010, it sets the parity bit to 1 in order to make an even number of 1s (four).

The receiver also counts the data bits to calculate what the parity bit should be. If it matches the parity bit received, the serial receiver assumes that the data was received correctly. Of course, this is not necessarily true, since two incorrectly received bits could make parity seem correct when the data was wrong, or the parity bit itself could be bad when the rest of the data was correct. Parity errors are only detected on the receiver side.

Normally, the receiver determines how to handle an error. In a more robust application, the receiver and transmitter might be set up in such that the receiver can request a re-send of data that was received with a parity error.

SEROUT Modifiers.
The example below will transmit a single byte through bit-0 of PORTA at 2400 baud, 8N1, inverted: -

```
SEROUT PORTA.0 , 16780 , [ 65 ]
```

In the above example, **SEROUT** will transmit a byte equal to 65 (the ASCII value of the character "A") through PORTA.0. If the PICmicro^{tm} was connected to a PC running a terminal program such as HyperTerminal set to the same baud rate, the character "A" would appear on the screen. Always remembering that the polarity will differ if a line transceiver such as the MAX232 is used.

What if you wanted the value 65 to appear on the PC's screen? As was stated earlier, it is up to the receiving side (in serial communication) to interpret the values. In this case, the PC is interpreting the byte-sized value to be the ASCII code for the character "A". Unless you're also writing the software for the PC, you cannot change how the PC interprets the incoming serial data, therefore to solve this problem, the data needs to be translated before it is sent.

The **SEROUT** command provides a modifier which will translate the value 65 into two ASCII codes for the characters "6" and "5" and then transmit them: -

```
SEROUT PORTA.0 , 16780 , [ @ 65 ]
```

or

```
SEROUT PORTA.0 , 16780 , [ DEC 65 ]
```

Notice that the decimal modifier in the **SEROUT** command is the character **@** or word **DEC**, both these modifiers do the same thing, which is to inform **SEROUT** to convert the number into separate ASCII characters which represent the value in decimal form. If the value 65 in the code were changed to 123, the **SEROUT** command would send three bytes (49, 50 and 51) corresponding to the characters "1", "2" and "3".

This is exactly the same modifier that is used in the **RSOUT** and **PRINT** commands.

As well as the **DEC** modifier, **SEROUT** may use **HEX**, or **BIN** modifiers, again, these are the same as used in the **RSOUT** and **PRINT** commands. Therefore, please refer to the **RSOUT** or **PRINT** command descriptions for an explanation of these. The **SEROUT** command sends quoted text exactly as it appears in the *OutputData* list:

```
SEROUT PORTA.0 , 16780 , [ "HELLO WORLD" , 13 ]
SEROUT PORTA.0 , 16780 , [ "Num = " , DEC 100 ]
```

The above code will display "HELLO WORLD" on one line and "Num = 100" on the next line. Notice that you can combine data to output in one **SEROUT** command, separated by commas. In the example above, we could have written it as one line of code: -

```
SEROUT PORTA.0 , 16780 , [ "HELLO WORLD" , 13 , "Num = " , DEC 100 ]
```

SEROUT also has some other modifiers. These are listed below: -

Modifier	**Operation**
AT ypos,xpos	Position the cursor on a serial LCD
CLS	Clear a serial LCD (also creates a 30ms delay)
BIN{1..32}	Send binary digits
DEC{1..10}	Send decimal digits
HEX{1..8}	Send hexadecimal digits
SBIN{1..32}	Send signed binary digits
SDEC{1..10}	Send signed decimal digits
SHEX{1..8}	Send signed hexadecimal digits
IBIN{1..32}	Send binary digits with a preceding '%' identifier
IDEC{1..10}	Send decimal digits with a preceding '#' identifier
IHEX{1..8}	Send hexadecimal digits with a preceding '$' identifier
ISBIN{1..32}	Send signed binary digits with a preceding '%' identifier
ISDEC{1..10}	Send signed decimal digits with a preceding '#' identifier
ISHEX{1..8}	Send signed hexadecimal digits with a preceding '$' identifier
REP c\n	Send character c repeated n times

If a floating point variable is to be displayed, then the digits after the **DEC** modifier determine how many remainder digits are printed. i.e. numbers after the decimal point.

```
DIM FLT AS FLOAT
FLT = 3.145
SEROUT PORTA.0 , 16780 , [DEC2 FLT]        ' Send 2 values after the decimal point
```

The above program will send 3.14

If the digit after the **DEC** modifier is omitted, then 3 values will be displayed after the decimal point.

```
DIM FLT AS FLOAT
FLT = 3.1456
SEROUT PORTA.0 , 16780 , [DEC FLT]         ' Send 3 values after the decimal point
```

The above program will send 3.145

There is no need to use the **SDEC** modifier for signed floating point values, as the compiler's **DEC** modifier will automatically display a minus result: -

```
DIM FLT AS FLOAT
FLT = -3.1456
SEROUT PORTA.0 , 16780 , [DEC FLT]         ' Send 3 values after the decimal point
```

The above program will send -3.145

HEX or **BIN** modifiers cannot be used with floating point values or variables.

Using Strings with SEROUT.

The **STR** modifier is used for transmitting a string of characters from a byte array variable. A string is a set of characters that are arranged or accessed in a certain order. The characters "ABC" would be stored in a string with the "A" first, followed by the "B" then followed by the "C". A byte array is a similar concept to a string; it contains data that is arranged in a certain order. Each of the elements in an array is the same size. The string "ABC" would be stored in a byte array containing three bytes (elements).

Below is an example that transmits five bytes (from a byte array) through bit-0 of PORTA at 9600 bps, N81/inverted: -

```
DIM SerString[10] AS BYTE                   ' Create a 10-byte array.
SerString[0] = "H"                          ' Load the first 5 bytes of the array
SerString[1] = "E"                          ' With the word "HELLO"
SerString[2] = "L"
SerString[3] = "L"
SerString[4] = "O"
SEROUT PORTA.0 , 16468 , [ STR SerString\5 ]   ' Send 5-byte string.
```

Note that we use the optional \n argument of **STR**. If we didn't specify this, the PICmicro^{tm} would try to keep sending characters until all 10 bytes of the array were transmitted, or it found a byte equal to 0 (a NULL terminator). Since we didn't specify a last byte of 0 in the array, and we do not wish the last five bytes to be transmitted, we chose to tell it explicitly to only send the first 5 characters.

The above example may also be written as: -

```
DIM SerString[10] AS BYTE                   ' Create a 10-byte array.
STR SerString = "HELLO" , 0                 ' Load the first 6 bytes of the array
SEROUT PORTA.0 , 16468 , [ STR SerString]   ' Send first 5-bytes of string.
```

In the above example, we specifically added a NULL terminator to the end of the string (a zero). Therefore, the **STR** modifier within the **SEROUT** command will output data until this is reached. An alternative to this would be to create the array exactly the size of the text. In our example, the array would have been 5 elements in length.

Another form of string is used by the **CSTR** modifier. Note: Because this uses the **CDATA** command to create the individual elements it is only for use with PICs that support self-modifying features, such as the 16F87X, and 18XXXX range of devices.

Below is an example of using the **CSTR** modifier. It's function is the same as the above examples, however, no RAM is used for creating arrays.

```
    SEROUT PORTA.0 , 16468 , [ CSTR SerString]

SerString: CDATA "HELLO" , 0
```

The **CSTR** modifier will always be terminated by a NULL (i.e. zero at the end of the text or data). If the NULL is omitted, then the **SEROUT** command will continue transmitting characters forever.

The **SEROUT** command can also be configured to pause between transmitted bytes. This is the purpose of the optional *Pace* operator. For example (9600 baud N8, inverted): -

```
SEROUT PORTA.0 , 16468 , 1000 , [ "Send this message Slowly" ]
```

Here, the PICmicro^{tm} transmits the message "Send this message Slowly" with a 1 second delay between each character.

A good reason to use the *Pace* feature is to support devices that require more than one stop bit. Normally, the PICmicro^{tm} sends data as fast as it can (with a minimum of 1 stop bit between bytes). Since a stop bit is really just a resting state in the line (no data transmitted), using the *Pace* option will effectively add multiple stop bits. Since the requirement for 2 or more stop bits (on some devices) is really just a minimum requirement, the receiving side should receive this data correctly.

SEROUT Flow Control.
When designing an application that requires serial communication between PICs, you need to work within these limitations: -

When the PICmicro^{tm} is sending or receiving data, it cannot execute other instructions.
When the PICmicro^{tm} is executing other instructions, it cannot send or receive data.
The compiler does not offer a serial buffer as there is in PCs. At lower crystal frequencies, and higher serial rates, the PICmicro^{tm} cannot receive data via **SERIN**, process it, and execute another **SERIN** in time to catch the next chunk of data, unless there are significant pauses between data transmissions.

These limitations can sometimes be addressed by using flow control; the *Fpin* option for **SEROUT** and **SERIN**. Through *Fpi*n, **SERIN** can inform another PICmicro^{tm} sender when it is ready to receive data and **SEROUT** (on the sender) will wait for permission to send. *Fpin* flow control follows the rules of other serial handshaking schemes, however most computers other than the PICmicro^{tm} cannot start and stop serial transmission on a byte-by-byte basis. That is why this discussion is limited to communication between PICmicros.

Below is an example using flow control with data through bit-0 of PORTA, and flow control through bit-1 of PORTA, 9600 baud, N8, noninverted: -

```
SEROUT PORTA.0\PORTA.1 , 84 , [SerData]
```

When SERIN executes, bit-0 of PORTA *(Tpi*n) is made an output in preparation for sending data, and bit-1 of PORTA *(Fpi*n) is made an input, to wait for the "go" signal from the receiver. The table below illustrates the relationship of serial polarity to *Fpin* states.

Serial Polarity	Ready to Receive ("Go")	Not Ready to Receive ("Stop")
Inverted	*Fpin* is High (1)	*Fpin* is Low (0)
Non-inverted	*Fpin* is Low (0)	*Fpin* is High (1)

See **SERIN** for a flow control circuit.

The **SEROUT** command supports open-drain and open-source output, which makes it possible to network multiple PICs on a single pair of wires. These ‘open baudmodes' only actively drive the *Tpin* in one state (for the other state, they simply disconnect the pin; setting it to an input mode). If two PICs in a network had their **SEROUT** lines connected together (while a third device listened on that line) and the PICs were using always-driven baudmodes, they could simultaneously output two opposite states (i.e. +5 volts and ground). This would create a short circuit. The heavy current flow would likely damage the I/O pins or the PICs themselves.

Since the open baudmodes only drive in one state and float in the other, there's no chance of this kind of short happening.

The polarity selected for **SEROUT** determines which state is driven and which is open as shown in the table below.

Serial Polarity	State(0)	State(1)	Resistor Pulled to:
Inverted	Open	Driven	Gnd (Vss)
Non-inverted	Driven	Open	+5V (Vdd)

Since open baudmodes only drive to one state, they need a resistor to pull the networked line into the opposite state, as shown in the above table and in the circuits below. Open baudmodes allow the PICmicro^{tm} to share a line, however it is up to your program to resolve other networking issues such as who talks when, and how to detect, prevent and fix data errors.

See also : **RSIN, RSOUT, HRSIN, HRSOUT, HSERIN, HSEROUT, SERIN.**

SERVO

Syntax
SERVO *Pin* , *Rotation Value*

Overview
Control a remote control type servo motor.

Operators
Pin is a Port.Pin constant that specifies the I/O pin for the attachment of the motor's control terminal.
Rotation Value is a 16-bit (0-65535) constant or **WORD** variable that dictates the position of the motor. A value of approx 500 being a rotation to the farthest position in a direction and approx 2500 being the farthest rotation in the opposite direction. A value of 1500 would normally centre the servo but this depends on the motor type.

Example

```
        ' Control a servo motor attached to pin 3 of PORTA

        DEVICE 16F628                          ' We'll use the new PICmicro
        DIM Pos AS WORD                        ' Servo Position
        SYMBOL Pin = PORTA.3                   ' Alias the servo pin
        CMCON = 7                              ' PORTA to digital
        CLS                                    ' Clear the LCD
        Pos = 1500                             ' Centre the servo
        PORTA = 0                              ' PORTA lines low to read buttons
        TRISA = %00000111                      ' Enable the button pins as inputs

        ' ** Check any button pressed to move servo **
Main:
        IF PORTA.0 = 0 Then IF Pos < 3000 Then Pos = Pos + 1     ' Move servo left
        IF PORTA.1 = 0 Then Pos = 1500                           ' Centre servo
        IF PORTA.2 = 0 Then IF Pos > 0 Then Pos = Pos - 1        ' Move servo right
        SERVO Pin , Pos
        DELAYMS 5                                                ' Servo update rate
        PRINT AT 1 , 1 , "Position=" , DEC Pos , " "
        GOTO Main
```

Notes
Servos of the sort used in radio-controlled models are finding increasing applications in this robotics age we live in. They simplify the job of moving objects in the real world by eliminating much of the mechanical design. For a given signal input, you get a predictable amount of motion as an output.

To enable a servo to move it must be connected to a 5 Volt power supply capable of delivering an ampere or more of peak current. It then needs to be supplied with a positioning signal. The signal is normally a 5 Volt, positive-going pulse between 1 and 2 milliseconds (ms) long, repeated approximately 50 times per second.

The width of the pulse determines the position of the servo. Since a servo's travel can vary from model to model, there is not a definite correspondence between a given pulse width and a particular servo angle, however most servos will move to the centre of their travel when receiving 1.5ms pulses.

Servos are closed-loop devices. This means that they are constantly comparing their commanded position (proportional to the pulse width) to their actual position (proportional to the resistance of an internal potentiometer mechanically linked to the shaft). If there is more than a small difference between the two, the servo's electronics will turn on the motor to eliminate the error. In addition to moving in response to changing input signals, this active error correction means that servos will resist mechanical forces that try to move them away from a commanded position. When the servo is unpowered or not receiving positioning pulses, the output shaft may be easily turned by hand. However, when the servo is powered and receiving signals, it won't move from its position.

Driving servos with PROTON+ is extremely easy. The **SERVO** command generates a pulse in 1microsecond (µs) units, so the following code would command a servo to its centred position and hold it there: -

```
Again:
        SERVO PORTA.0 , 1500
        DELAYMS 20
        GOTO Again
```

The 20ms delay ensures that the program sends the pulse at the standard 50 pulse-per-second rate. However, this may be lengthened or shortened depending on individual motor characteristics.

The **SERVO** command is oscillator independent and will always produce 1us pulses regardless of the crystal frequency used.

See also : **PULSOUT.**

SETBIT

Syntax
SETBIT *Variable* , *Index*

Overview
Set a bit of a variable or register using a variable index to the bit of interest.

Operators
Variable is a user defined variable, of type **BYTE**, **WORD**, or **DWORD**.
Index is a constant, variable, or expression that points to the bit within *Variable* that requires setting.

Example

```
        ' Clear then Set each bit of variable EX_VAR
        DEVICE = 16F877
        XTAL = 4
        DIM EX_VAR AS BYTE
        DIM INDEX AS BYTE
        CLS
        EX_VAR = %11111111
AGAIN:
        FOR INDEX = 0 TO 7              ' Create a loop for 8 bits
        CLEARBIT EX_VAR,INDEX           ' Clear each bit of EX_VAR
        PRINT AT 1,1,BIN8 EX_VAR        ' Display the binary result
        DELAYMS 100                     ' Slow things down to see what's happening
        NEXT                            ' Close the loop
        FOR INDEX = 7 TO 0 STEP -1      ' Create a loop for 8 bits
        SETBIT EX_VAR,INDEX             ' Set each bit of EX_VAR
        PRINT AT 1,1,BIN8 EX_VAR        ' Display the binary result
        DELAYMS 100                     ' Slow things down to see what's happening
        NEXT                            ' Close the loop
        GOTO AGAIN                      ' Do it forever
```

Notes
There are many ways to set a bit within a variable, however, each method requires a certain amount of manipulation, either with rotates, or alternatively, the use of indirect addressing using the FSR, and INDF registers. Each method has its merits, but requires a certain amount of knowledge to accomplish the task correctly. The **SETBIT** command makes this task extremely simple using a register rotate method, however, this is not necessarily the quickest method, or the smallest, but it is the easiest. For speed and size optimisation, there is no shortcut to experience.

To SET a known constant bit of a variable or register, then access the bit directly using PORT.n.

```
        PORTA.1 = 1
or
        VAR1.4 = 1
```

If a PORT is targeted by **SETBIT**, the TRIS register is **NOT** affected.

See also : CLEARBIT, GETBIT, LOADBIT.

SET_OSCCAL

Syntax
SET_OSCCAL

Overview
Calibrate the on-chip oscillator found on some PICmicro^{tm} devices.

Notes
Some PICmicro^{tm} devices, such as the PIC12C67x or 16F62x range, have on-chip RC oscillators. These devices contain an oscillator calibration factor in the last location of code space. The on-chip oscillator may be fine-tuned by reading the data from this location and moving it into the OSCCAL register. The command **SET_OSCCAL** has been specially created to perform this task automatically each time the program starts: -

```
DEVICE 12C671
SET_OSCCAL                  ' Set OSCCAL for 1K device 12C671
```

Add this command near the beginning of the program to perform the setting of OSCCAL.

If a UV erasable (windowed) device has been erased, the value cannot be read from memory. To set the OSCCAL register on an erased part, add the following line near the beginning of the program: -

```
OSCCAL = $C0       ' Set OSCCAL register to $C0
```

The value $C0 is only an example. The part would need to be read before it is erased to obtain the actual OSCCAL value for that particular device.

Always refer to the Microchip data sheets for more information on OSCCAL.

SET

Syntax

SET *Variable* or *Variable.Bit*

Overview

Place a variable or bit in a high state. For a variable, this means filling it with 1's. For a bit this means setting it to 1.

Operators

Variable can be any variable or register.
Variable**.**Bit can be any variable and bit combination.

Example

```
SET VAR1.3        ' Set bit 3 of VAR1
SET VAR1          ' Load VAR1 with the value of 255
SET STATUS.0      ' Set the carry flag high
```

Notes

SET does not alter the TRIS register if a PORT is targeted.

See also : **CLEAR, HIGH, LOW.**

SHIN

Syntax
SHIN *dpin* , *cpin* , *mode* , **[** *result* { *bits* } { ,*result* { *bits* }...} **]**

or

Var = **SHIN** *dpin* , *cpin* , *mode , shifts*

Overview
Shift data in from a synchronous-serial device.

Operators
Dpin is a Port.Pin constant that specifies the I/O pin that will be connected to the synchronous-serial device's data output. This pin's I/O direction will be changed to input and will remain in that state after the instruction is completed.
Cpin is a Port.Pin constant that specifies the I/O pin that will be connected to the synchronous-serial device's clock input. This pin's I/O direction will be changed to output.
Mode is a constant that tells **SHIN** the order in which data bits are to be arranged and the relationship of clock pulses to valid data. Below are the symbols, values, and their meanings: -

Symbol	Value	Description
MSBPRE **MSBPRE_L**	0	Shift data in highest bit first. Read data before sending clock. Clock idles low
LSBPRE **LSBPRE_L**	1	Shift data in lowest bit first. Read data before sending clock. Clock idles low
MSBPOST **MSBPOST_L**	2	Shift data in highest bit first. Read data after sending clock. Clock idles low
LSBPOST **LSBPOST_L**	3	Shift data in highest bit first. Read data after sending clock. Clock idles low
MSBPRE_H	4	Shift data in highest bit first. Read data before sending clock. Clock idles high
LSBPRE_H	5	Shift data in lowest bit first. Read data before sending clock. Clock idles high
MSBPOST_H	6	Shift data in highest bit first. Read data after sending clock. Clock idles high
LSBPOST_H	7	Shift data in lowest bit first. Read data after sending clock. Clock idles high

Result is a bit, byte, or word variable in which incoming data bits will be stored.
Bits is an optional constant specifying how many bits (1-16) are to be input by **SHIN**. If no *bits* entry is given, **SHIN** defaults to 8 bits.
Shifts informs the **SHIN** command as to how many bit to shift in to the assignment variable, when used in the inline format.

Notes
SHIN provides a method of acquiring data from synchronous-serial devices, without resorting to the hardware SPI modules resident on some PICmicro^{tm} types. Data bits may be valid after the rising or falling edge of the clock line. This kind of serial protocol is commonly used by controller peripherals such as ADCs, DACs, clocks, memory devices, etc.

The **SHIN** instruction causes the following sequence of events to occur: -

Makes the clock pin (cpin) output low.
Makes the data pin (dpin) an input.
Copies the state of the data bit into the msb (lsb-modes) or lsb (msb modes) either before (-pre modes) or after (-post modes) the clock pulse.
Pulses the clock pin high.
Shifts the bits of the result left (msb- modes) or right (lsb-modes).
Repeats the appropriate sequence of getting data bits, pulsing the clock pin, and shifting the result until the specified number of bits is shifted into the variable.

Making **SHIN** work with a particular device is a matter of matching the mode and number of bits to that device's protocol. Most manufacturers use a timing diagram to illustrate the relationship of clock and data.

```
SYMBOL CLK = PORTB.0
SYMBOL DTA = PORTB.1
SHIN DTA , CLK , MSBPRE , [VAR1]             ' Shiftin msb-first, pre-clock.
```

In the above example, both **SHIN** instructions are set up for msb-first operation, so the first bit they acquire ends up in the msb (leftmost bit) of the variable.

The post-clock Shift in, acquires its bits after each clock pulse. The initial pulse changes the data line from 1 to 0, so the post-clock Shiftin returns %01010101.

By default, **SHIN** acquires eight bits, but you can set it to shift any number of bits from 1 to 16 with an optional entry following the variable name. In the example above, substitute this for the first **SHIN** instruction: -

```
SHIN DTA , CLK , MSBPRE , [VAR1 \ 4] 'Shift in 4 bits.
```

Some devices return more than 16 bits. For example, most 8-bit shift registers can be daisy-chained together to form any multiple of 8 bits; 16, 24, 32, 40... You can use a single **SHIN** instruction with multiple variables.
Each variable can be assigned a particular number of bits with the
backslash (\) option. Modify the previous example: -

```
' 5 bits into VAR1; 8 bits into VAR2.
SHIN DTA , CLK , MSBPRE , [ VAR1 \ 5 , VAR2 ]
PRINT "1st variable: " , BIN8 VAR1
PRINT "2nd variable: " , BIN8 VAR2
```

Inline SHIN Command.
The structure of the INLINE **SHIN** command is: -

Var = **SHIN** *dpin* , *cpin* , *mode , shifts*

DPIN, *CPIN*, and *MODE* have not changed in any way, however, the INLINE structure has a new operand, namely *SHIFTS*. This informs the **SHIN** command as to how many bit to shift in to the assignment variable. For example, to shift in an 8-bit value from a serial device, we would use: -

```
VAR1 = SHIN DT , CK , MSBPRE , 8
```

To shift 16-bits into a **WORD** variable: -

```
WRD = SHIN DT , CK , MSBPRE , 16
```

SHOUT

Syntax
SHOUT *Dpin*, *Cpin*, *Mode*, **[***OutputData* {*Bits*} {,*OutputData* {*Bits*}..} **]**

Overview
Shift data out to a synchronous serial device.

Operators
Dpin is a Port.Pin constant that specifies the I/O pin that will be connected to the synchronous serial device's data input. This pin will be set to output mode.
Cpin is a Port.Pin constant that specifies the I/O pin that will be connected to the synchronous serial device's clock input. This pin will be set to output mode.
Mode is a constant that tells **SHOUT** the order in which data bits are to be arranged. Below are the symbols, values, and their meanings: -

Symbol	Value	Description
LSBFIRST **LSBFIRST _L**	0	Shift data out lowest bit first. Clock idles low
MSBFIRST **MSBFIRST_L**	1	Shift data out highest bit first. Clock idles low
LSBFIRST _H	4	Shift data out lowest bit first. Clock idles high
MSBFIRST_H	5	Shift data out highest bit first. Clock idles high

OutputData is a variable, constant, or expression containing the data to be sent.
Bits is an optional constant specifying how many bits are to be output by **SHOUT**. If no *Bits* entry is given, **SHOUT** defaults to 8 bits.

Notes
SHIN and **SHOUT** provide a method of acquiring data from synchronous serial devices. Data bits may be valid after the rising or falling edge of the clock line. This kind of serial protocol is commonly used by controller peripherals like ADCs, DACs, clocks, memory devices, etc.

At their heart, synchronous-serial devices are essentially shift-registers; trains of flip flops that receive data bits in a bucket brigade fashion from a single data input pin. Another bit is input each time the appropriate edge (rising or falling, depending on the device) appears on the clock line.

The **SHOUT** instruction first causes the clock pin to output low and the data pin to switch to output mode. Then, **SHOUT** sets the data pin to the next bit state to be output and generates a clock pulse. **SHOUT** continues to generate clock pulses and places the next data bit on the data pin for as many data bits as are required for transmission.

Making **SHOUT** work with a particular device is a matter of matching the mode and number of bits to that device's protocol. Most manufacturers use a timing diagram to illustrate the relationship of clock and data. One of the most important items to look for is which bit of the data should be transmitted first; most significant bit (MSB) or least significant bit (LSB).

Example

```
SHOUT DTA , CLK , MSBFIRST , [ 250 ]
```

In the above example, the **SHOUT** command will write to I/O pin DTA (the *Dpi*n) and will generate a clock signal on I/O CLK (the *Cpi*n). The **SHOUT** command will generate eight clock pulses while writing each bit (of the 8-bit value 250) onto the data pin *(Dpi*n). In this case, it will start with the most significant bit first as indicated by the *Mode* value of **MSBFIRST**.

By default, **SHOUT** transmits eight bits, but you can set it to shift any number of bits from 1 to 16 with the *Bits* argument. For example: -

```
SHOUT DTA , CLK , MSBFIRST , [ 250 \ 4 ]
```

Will only output the lowest 4 bits (%0000 in this case). Some devices require more than 16 bits. To solve this, you can use a single **SHOUT** command with multiple values. Each value can be assigned a particular number of bits with the *Bits* argument. As in: -

```
SHOUT DTA , CLK , MSBFIRST , [ 250 \ 4 , 1045 \ 16]
```

The above code will first shift out four bits of the number 250 (%1111) and then 16 bits of the number 1045 (%0000010000010101). The two values together make up a 20 bit value.

See also : **SHIN.**

SNOOZE

Syntax
SNOOZE *Period*

Overview
Enter sleep mode for a short period. Power consumption is reduced to approx 50 µA assuming no loads are being driven.

Operators
Period is a variable or constant that determines the duration of the reduced power nap. The duration is (2^period) * 18 ms. (Read as "2 raised to the power of ‘period', times 18 ms.") Period can range from 0 to 7, resulting in the following snooze lengths: -

Period	**Length of SNOOZE**
0 - 1	18ms
1 - 2	36ms
2 - 4	72ms
3 - 8	144ms
4 - 16	288ms
5 - 32	576ms
6 - 64	1152ms (1.152 seconds)
7 - 128	2304ms (2.304 seconds)

Example

```
SNOOZE 6            'Low power mode for approx 1.152 seconds
```

Notes
SNOOZE intervals are directly controlled by the watchdog timer without compensation. Variations in temperature, supply voltage, and manufacturing tolerance of the PICmicro^{tm} chip you are using can cause the actual timing to vary by as much as -50, +100 percent

See also : **SLEEP.**

SLEEP

Syntax
SLEEP { *Length* }

Overview
Places the PICmicro^{tm} into low power mode for approx *n* seconds. i.e. power down but leaves the port pins in their previous states.

Operators
Length is an optional variable or constant (1-65535) that specifies the duration of sleep in seconds. If length is omitted, then the SLEEP command is assumed to be the assembler mnemonic, which means the PICmicro^{tm} will sleep continuously, or until the Watchdog timer wakes it up.

Example

```
        SYMBOL LED = PORTA.0
Again:
        HIGH LED            ' Turn LED on.
        DELAYMS 1000        ' Wait 1 second.
        LOW LED             ' Turn LED off.
        SLEEP 60            ' Sleep for 1 minute.
        GOTO Again
```

Notes
SLEEP will place the PICmicro^{tm} into a low power mode for the specified period of seconds. Period is 16 bits, so delays of up to 65,535 seconds are the limit (a little over 18 hours) **SLEEP** uses the Watchdog Timer so it is independent of the oscillator frequency. The smallest units is about 2.3 seconds and may vary depending on specific environmental conditions and the device used.

The **SLEEP** command is used to put the PICmicro^{tm} in a low power mode without resetting the registers. Allowing continual program execution upon waking up from the **SLEEP** period.

Waking a 14-bit core PICmicro^{tm} from SLEEP
All the PICmicro^{tm} range have the ability to be placed into a low power mode, consuming micro Amps of current.

The command for doing this is **SLEEP**. The compiler's **SLEEP** command or the assembler's **SLEEP** instruction may be used. The compiler's **SLEEP** command differs somewhat to the assembler's in that the compiler's version will place the PICmicro^{tm} into low power mode for *n* seconds (*where n is a value from 0 to 65535*). The assembler's version still places the PICmicro^{tm} into low power mode, however, it does this forever, or until an internal or external source wakes it. This same source also wakes the PICmicro^{tm} when using the compiler's command.

Many things can wake the PICmicro^{tm} from its sleep, the WATCHDOG TIMER is the main cause and is what the compiler's **SLEEP** command uses.

Another method of waking the PICmicro^{tm} is an external one, a change on one of the port pins. We will examine more closely the use of an external source. There are two main ways of waking the PICmicro^{tm} using an external source. One is a change on bits 4..7 of PORTB.

Another is a change on bit-0 of PORTB. We shall first look at the wake up on change of PORTB,bits-4..7.

As its name suggests, any change on these pins either high to low or low to high will wake the PICmicro^{tm}. However, to setup this mode of operation several bits within registers INTCON and OPTION_REG need to be manipulated. One of the first things required is to enable the weak PORTB pull-up resistors. This is accomplished by clearing the RBPU bit of OPTION_REG (*OPTION_REG.7*). If this was not done, then the pins would be floating and random input states would occur waking the PICmicro^{tm} up prematurely. Although technically we are enabling a form of interrupt, we are not interested in actually running an interrupt handler. Therefore, we must make sure that GLOBAL interrupts are disabled, or the PICmicro^{tm} will jump to an interrupt handler every time a change occurs on PORTB. This is done by clearing the GIE bit of INTCON (*INTCON.7*).

The interrupt we are concerned with is the RB port change type. This is enabled by setting the RBIE bit of the INTCON register (*INTCON.3*). All this will do is set a flag whenever a change occurs (*and of course wake up the PICmicro*^{tm}). The flag in question is RBIF, which is bit-0 of the INTCON register. For now we are not particularly interested in this flag, however, if global interrupts were enabled, this flag could be examined to see if it was the cause of the interrupt. The RBIF flag is not cleared by hardware so before entering SLEEP it should be cleared. It must also be cleared before an interrupt handler is exited.

The SLEEP command itself is then used. Upon a change of PORTB, bits 4..7 the PICmicro^{tm} will wake up and perform the next instruction (*or command*) after the SLEEP command was used. A second external source for waking the PICmicro^{tm} is a pulse applied to PORTB.0. This interrupt is triggered by the edge of the pulse, high to low or low to high. The INTEDG bit of OPTION_REG (*OPTION_REG.6*) determines what type of pulse will trigger the interrupt. If it is set, then a low to high pulse will trigger it, and if it is cleared then a high to low pulse will trigger it.

To allow the PORTB.0 interrupt to wake the PICmicro^{tm} the INTE bit must be set, this is bit-4 of the INTCON register. This will allow the flag INTF (*INTCON.1*) to be set when a pulse with the right edge is sensed. This flag is only of any importance when determining what caused the interrupt. However, it is not cleared by hardware and should be cleared before the SLEEP command is used (*or the interrupt handler is exited*). The program below will wake the PICmicro^{tm} when a change occurs on PORTB, bits 4-7.

```
        SYMBOL LED = PORTB.0              ' Assign the LED's pin
        SYMBOL RBIF = INTCON.0            ' PORTB[4..7] Change Interrupt Flag
        SYMBOL RBIE = INTCON.3            ' PORTB[4..7] Change Interrupt Enable
        SYMBOL RBPU = OPTION_REG.7        ' PortB pull-ups
        SYMBOL GIE = INTCON.7             ' Global interrupt enable/disable
Main:   GIE = 0                           ' Turn OFF global interrupts
        TRISB.4 = 1                       ' Set PORTB.4 as an Input
        RBPU = 0                          ' Enable PORTB Pull-up Resistors
        RBIE = 1                          ' Enable PORTB[4..7] interrupt
Again:  DELAYMS 100
        LOW LED                           ' Turn off the LED
        RBIF = 0                          ' Clear the PORTB[4..7] interrupt flag
        SLEEP                             ' Put the PICmicro to sleep
        DELAYMS 100                       ' When it wakes up, delay for 100ms
        HIGH LED                          ' Then light the LED
        GOTO Again                        ' Do it forever
```

SOUND

Syntax
SOUND *Pi*n, **[** *Not*e,*Duratio*n {,*Not*e,*Duration...*} **]**

Overview
Generates tone and/or white noise on the specified *Pi*n. *Pin* is automatically made an output.

Operators
Pin is a Port.Pin constant that specifies the output pin on the PICmicro^{tm}.
Note can be an 8-bit variable or constant. 0 is silence. *Notes* 1-127 are tones. *Notes* 128-255 are white noise. Tones and white noises are in ascending order (i.e. 1 and 128 are the lowest frequencies, 127 and 255 are the highest). *Note* 1 is approx 78.74Hz and *Note* 127 is approx 10,000Hz.
Duration can be an 8-bit variable or constant that determines how long the *Note* is played in approx 10ms increments.

Example

```
        ' Star Trek The Next Generation...Theme and ship take-off
        DEVICE 16F877
        XTAL = 4

        DIM LOOP AS BYTE
        SYMBOL PIN = PORTB.0

THEME:
        SOUND PIN, [50,60,70,20,85,120,83,40,70,20,50,20,70,20,90,120,90,20,98,160]
        DELAYMS 500
        FOR LOOP = 128 TO 255               ' Ascending white noises
        SOUND PIN, [LOOP,2]                 ' For warp drive sound
        NEXT
        SOUND PIN, [43,80,63,20,77,20,71,80,51,20,_
                    90,20,85,140,77,20,80,20,85,20,_
                    90,20,80,20,85,60,90,60,92,60,87,_
                    60,96,70,0,10,96,10,0,10,96,10,0,_
                    10,96,30,0,10,92,30,0,10,87,30,0,_
                    10,96,40,0,20,63,10,0,10,63,10,0,_
                    10,63,10,0,10,63,20]
        DELAYMS 10000
        GOTO THEME
```

Notes
With the excellent I/O characteristics of the PICmicro^{tm}, a speaker can be driven through a capacitor directly from the pin of the PICmicro^{tm}. The value of the capacitor should be determined based on the frequencies of interest and the speaker load. Piezo speakers can be driven directly.

See also : FREQOUT, DTMFOUT, SOUND2.

SOUND2

Syntax

SOUND2 *Pin2*, *Pin2*, **[** *Note1\Note2\Duration* {,*Note1,Note2\Duration...*} **]**

Overview

Generate specific notes on each of the two defined pins. With the **SOUND2** command more complex notes can be played by the PICmicro^{tm}.

Operators

Pin1 and Pin2 are Port.Pin constants that specify the output pins on the PICmicro^{tm}.
Note is a variable or constant specifying frequency in Hertz (Hz, 0 to 16000) of the tones.
Duration can be a variable or constant that determines how long the *Notes* are played. In approx 1ms increments (0 to 65535).

Example 1

```
' Generate a 2500Hz tone and a 3500Hz tone for 1 second.
' The 2500Hz note is played from the first pin specified (PORTB.0),
' and the 3500Hz note is played from the second pin specified (PORTB.1).
DEVICE = 16F877
XTAL = 20
SYMBOL PIN1 = PORTB.0
SYMBOL PIN2 = PORTB.1
SOUND2 PIN1 , PIN2 , [2500 \ 3500 \ 1000]
STOP
```

Example 2

```
' Play two sets of notes 2500Hz and 3500Hz for 1 second
' and the second two notes, 2500Hz and 3500Hz for 2 seconds.
DEVICE = 16F877
XTAL = 20
SYMBOL PIN1 = PORTB.0
SYMBOL PIN2 = PORTB.1
SOUND2 PIN1 , PIN2 , [2500 \ 3500 \ 1000 , 2500 \ 3500 \ 2000 ]
STOP
```

Notes

SOUND2 generates two pulses at the required frequency one on each pin specified. The **SOUND2** command can be used to play tones through a speaker or audio amplifier. **SOUND2** can also be used to play more complicated notes. By generating two frequencies on separate pins, a more defined sound can be produced. **SOUND2** is somewhat dependent on the crystal frequency used for its note frequency, and duration.

SOUND2 does not require any filtering on the output, and produces a cleaner note than **FREQOUT**. However, unlike **FREQOUT**, the note is not a SINE wave. See diagram: -

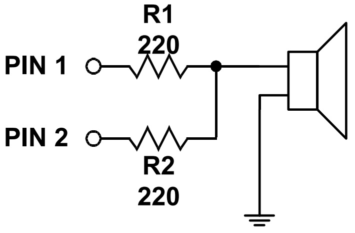

See also : **FREQOUT, DTMFOUT, SOUND.**

STOP

Syntax
STOP

Overview
STOP halts program execution by sending the PICmicro^{tm} into an infinite loop.

Example

```
IF A > 12 THEN STOP
{ code data }
```

If variable A contains a value greater than 12 then stop program execution. *code data* will not be executed.

Notes
Although **STOP** halts the PICmicro^{tm} in its tracks it does not prevent any code listed in the BASIC source after it being compiled. To do this, use the **END** command.

See also : **END, SLEEP, SNOOZE.**

STRN

Syntax
STRN *Byte Array* = *Item*

Overview
Load a Byte Array with NULL terminated data, which can be likened to creating a pseudo String variable.

Operators
Byte Array is the variable that will be loaded with values.
Item can be another **STRN** command, a **STR** command, **STR$** command, or a quoted character string

Example
' Load the Byte Array STRING1 with NULL terminated characters

```
INCLUDE "PROTON_4.INC"       ' Demonstration based on the PROTON dev board
DIM STRING1[21] as BYTE              ' Create a Byte array with 21 elements

DELAYMS 200                  ' Wait for PICmicro to stabilise
CLS                          ' Clear the LCD
STRN STRING1 = "HELLO WORLD"
' Load STRING1 with characters and NULL terminate it
PRINT STR STRING1            ' Display the string
STOP
```

See also: **Arrays as Strings, STR$.**

STR$

Syntax

STR *Byte Array* **= STR$ (***Modifier Variable***)**

Overview

Convert a DECIMAL, HEX, BINARY, or FLOATING POINT value or variable into a NULL terminated string held in a byte array. For use only with the STR and STRN commands.

Operators

Modifier is one of the standard modifiers used with PRINT, RSOUT**,** HSEROUT etc. See list below.
Variable is a variable that holds the value to convert. This may be a BIT, BYTE, WORD, DWORD, or FLOAT.
Byte Array must be of sufficient size to hold the resulting conversion and a terminating NULL character (0).

Notice that there is no comma separating the Modifier from the Variable. This is because the compiler borrows the format and subroutines used in **PRINT**. Which is why the modifiers are the same: -

BIN{1..32}	Convert to binary digits
DEC{1..10}	Convert to decimal digits
HEX{1..8}	Convert to hexadecimal digits
SBIN{1..32}	Convert to signed binary digits
SDEC{1..10}	Convert to signed decimal digits
SHEX{1..8}	Convert to signed hexadecimal digits
IBIN{1..32}	Convert to binary digits with a preceding '%' identifier
IDEC{1..10}	Convert to decimal digits with a preceding '#' identifier
IHEX{1..8}	Convert to hexadecimal digits with a preceding '$' identifier
ISBIN{1..32}	Convert to signed binary digits with a preceding '%' identifier
ISDEC{1..10}	Convert to signed decimal digits with a preceding '#' identifier
ISHEX{1..8}	Convert to signed hexadecimal digits with a preceding '$' identifier

Example 1

```
' Convert a WORD variable to a NULL terminated STRING of characters in a BYTE array.
    INCLUDE "PROTON_4.INC"       ' Use the PROTON board for the demo
    ' Create a byte array long enough to hold converted value, and NULL terminator
    DIM STRING1[11] AS BYTE
    DIM WRD1 AS WORD
    DELAYMS 500                  ' Wait for PICmicro to stabilise
    CLS                          ' Clear the LCD
    WRD1 = 1234                  ' Load the variable with a value
    STRN STRING1 = STR$(DEC WRD1)   ' Convert the Integer to a STRING
    PRINT STR STRING1            ' Display the string
    STOP
```

Example 2

```
' Convert a DWORD variable to a NULL terminated STRING of characters in a BYTE array.
    INCLUDE "PROTON_4.INC"               ' Use the PROTON board for the demo
    ' Create a byte array long enough to hold converted value, and NULL terminator
    DIM STRING1[11] AS BYTE
    DIM DWD1 AS DWORD
```

```
        DELAYMS 500                         ' Wait for PICmicro to stabilise
        CLS                                 ' Clear the LCD
        DWD1 = 1234                         ' Load the variable with a value
        STRN STRING1 = STR$(DEC DWD1)       ' Convert the Integer to a STRING
        PRINT STR STRING1                   ' Display the string
        STOP
```

Example 3

```
' Convert a FLOAT variable to a NULL terminated STRING of characters in a BYTE array.
        INCLUDE "PROTON_4.INC"              ' Use the PROTON board for the demo
        ' Create a byte array long enough to hold converted value, and NULL terminator
        DIM STRING1[11] AS BYTE
        DIM FLT1 AS FLOAT
        DELAYMS 500                         ' Wait for PICmicro to stabilise
        CLS                                 ' Clear the LCD
        FLT1 = 3.14                         ' Load the variable with a value
        STRN STRING1 = STR$(DEC FLT1 )      ' Convert the Float to a STRING
        PRINT STR STRING1                   ' Display the string
        STOP
```

Example 4

```
' Convert a WORD variable to a NULL terminated BINARY STRING
‘ of characters in a BYTE array.
        INCLUDE "PROTON_4.INC"              ' Use the PROTON board for the demo
        ' Create a byte array long enough to hold converted value, and NULL terminator
        DIM STRING1[34] AS BYTE
        DIM WRD1 AS WORD
        DELAYMS 500                         ' Wait for PICmicro to stabilise
        CLS                                 ' Clear the LCD
        WRD1 = 1234                         ' Load the variable with a value
        STRN STRING1 = STR$(BIN WRD1 )      ' Convert the Integer to a STRING
        PRINT STR STRING1                   ' Display the string
        STOP
```

If we examine the resulting string (Byte Array) converted with example 2, it will contain: -

character 1, character 2, character 3, character 4, 0

The zero is not character zero, but value zero. This is a NULL terminated string.

Notes

The Byte Array created to hold the resulting conversion, must be large enough to accommodate all the resulting digits, including a possible minus sign and preceding identifying character. %, $, or # if the **I** version modifiers are used. The compiler will try and warn you if it thinks the array may not be large enough, but this is a rough guide, and you as the programmer must decide whether it is correct or not. If the size is not correct, any adjacent variables will be overwritten, with potentially catastrophic results.

See also : STRN, Arrays as Strings.

SWAP

Syntax
SWAP *Variable* , *Variable*

Overview
Swap any two variable's values with each other.

Operators
Variable is the value to be swapped

Example
```
' If Dog = 2 and Cat = 10 then by using the swap command
' Dog will now equal 10 and Cat will equal 2.

VAR1 = 10                ' VAR1 equals 10
VAR2 = 20                ' VAR2 equals 20
SWAP VAR1 , VAR2         ' VAR2 now equals 20 and VAR1 now equals 10
```

SYMBOL

Syntax
SYMBOL *Name* { = } *Value*

Overview
Assign an alias to a register, variable, or constant value

Operators
Name can be any valid identifier.
Value can be any previously declared variable, system register, or a Register.Bit combination.
The equals '**=**' symbol is optional, and may be omitted if desired.

When creating a program it can be beneficial to use identifiers for certain values that don't change: -

```
SYMBOL Meter = 1
SYMBOL Centimetre = 100
SYMBOL Millimetre = 1000
```

This way you can keep your program very readable and if for some reason a constant changes later, you only have to make one change to the program to change all the values. Another good use of the constant is when you have values that are based on other values.

```
SYMBOL Meter = 1
SYMBOL Centimetre = Meter / 100
SYMBOL Millimetre = Centimetre / 10
```

In the example above you can see how the centimetre and millimetre were derived from the Meter.

Another use of the **SYMBOL** command is for assigning Port.Bit constants: -

```
SYMBOL LED = PORTA.0
HIGH LED
```

In the above example, whenever the text LED is encountered, Bit-0 of PORTA is actually referenced.

Floating point constants may also be created using **SYMBOL** by simply adding a decimal point to a value.

```
SYMBOL PI = 3.14              ' Create a floating point constant named PI
SYMBOL FL_NUM = 5.0           ' Create a floating point constant holding the value 5
```

Floating point constant can also be created using expressions.

```
' Create a floating point constant holding the result of the expression
SYMBOL QUANTA = 5.0 / 1024
```

Notes
SYMBOL cannot create new variables, it simply aliases an identifier to a previously assigned variable, or assigns a constant to an identifier.

TOGGLE

Syntax

TOGGLE *Port.Bit*

Overview

Sets a pin to output mode and reverses the output state of the pin, changing 0 to 1 and 1 to 0.

Operators

Port**.**Bit can be any valid Port and Bit combination.

Example

```
    HIGH PORTB.0              ' Set bit 0 of PORTB high
    TOGGLE PORTB.0            ' And now reverse the bit
    STOP
```

See also : **HIGH, LOW.**

TOLOWER

Syntax

Destination String = **TOLOWER (***Source String***)**

Overview

Convert the characters from a source string to lower case.

Overview

Destination String can only be a **STRING** variable, and should be large enough to hold the correct amount of characters extracted from the *Source String*.
Source String can be a **STRING** variable, or a Quoted String of Characters. The *Source String* can also be a **BYTE**, **WORD**, **BYTE_ARRAY**, **WORD_ARRAY** or **FLOAT** variable, in which case the value contained within the variable is used as a pointer to the start of the Source String's address in RAM. A third possibility for *Source String* is a LABEL name, in which case a NULL terminated Quoted String of Characters is read from a **CDATA** table.

Example 1

```
' Convert the characters from SOURCE_STRING to lowercase and place the result into
‘ DEST_STRING

        DEVICE = 18F452                             ' Must be a 16-bit core device for Strings
        DIM SOURCE_STRING as STRING * 20            ‘ Create a String of 20 characters
        DIM DEST_STRING as STRING * 20              ‘ Create another String

        SOURCE_STRING = "HELLO WORLD"               ' Load the source string with characters
        DEST_STRING = TOLOWER (SOURCE_STRING)    ' Convert to lowercase
        PRINT DEST_STRING                     ' Display the result, which will be "hello world"
        STOP
```

Example 2

```
' Convert the characters from a Quoted Character String to lowercase and place the result into
‘ DEST_STRING

        DEVICE = 18F452                             ' Must be a 16-bit core device for Strings
        DIM DEST_STRING as STRING * 20              ‘ Create a String of 20 characters

        DEST_STRING = TOLOWER ("HELLO WORLD")     ' Convert to lowercase
        PRINT DEST_STRING                     ' Display the result, which will be "hello world"
        STOP
```

Example 3

```
' Convert to lowercase from SOURCE_STRING into DEST_STRING using a pointer to
‘ SOURCE_STRING

        DEVICE = 18F452                             ' Must be a 16-bit core device for Strings
        DIM SOURCE_STRING as STRING * 20            ‘ Create a String of 20 characters
        DIM DEST_STRING as STRING * 20              ‘ Create another String
        ' Create a WORD variable to hold the address of SOURCE_STRING
        DIM STRING_ADDR as WORD
```

```
    SOURCE_STRING = "HELLO WORLD"           ' Load the source string with characters
    ' Locate the start address of SOURCE_STRING in RAM
    STRING_ADDR = VARPTR (SOURCE_STRING)
    DEST_STRING = TOLOWER(STRING_ADDR)          ' Convert to lowercase
    PRINT DEST_STRING                       ' Display the result, which will be "hello world"
    STOP
```

Example 4

' Convert characters from a CDATA table to lowercase and place result into DEST_STRING

```
    DEVICE = 18F452                         ' Must be a 16-bit core device for Strings
    DIM DEST_STRING as STRING * 20          ‘ Create a String of 20 characters

    DEST_STRING = TOLOWER (SOURCE)          ' Convert to lowercase
    PRINT DEST_STRING                       ' Display the result, which will be "hello world"
    STOP

' Create a NULL terminated string of characters in code memory
SOURCE:
    CDATA "HELLO WORLD" , 0
```

See also : **Creating and using Strings**
Creating and using VIRTUAL STRINGS with CDATA, CDATA, LEN
LEFT$, MID$, RIGHT$, STR$, TOUPPER, VARPTR .

TOUPPER

Syntax
Destination String = **TOUPPER (***Source String***)**

Overview
Convert the characters from a source string to UPPER case.

Overview
Destination String can only be a **STRING** variable, and should be large enough to hold the correct amount of characters extracted from the *Source String*.
Source String can be a **STRING** variable, or a Quoted String of Characters . The *Source String* can also be a **BYTE, WORD**, **BYTE_ARRAY**, **WORD_ARRAY** or **FLOAT** variable, in which case the value contained within the variable is used as a pointer to the start of the Source String's address in RAM. A third possibility for *Source String* is a LABEL name, in which case a NULL terminated Quoted String of Characters is read from a **CDATA** table.

Example 1

```
' Convert the characters from SOURCE_STRING to uppercase and place the result into
‘ DEST_STRING

        DEVICE = 18F452                       ' Must be a 16-bit core device for Strings
        DIM SOURCE_STRING as STRING * 20       ‘ Create a String of 20 characters
        DIM DEST_STRING as STRING * 20         ‘ Create another String

        SOURCE_STRING = "hello world"          ' Load the source string with characters
        DEST_STRING = TOUPPER (SOURCE_STRING)     ' Convert to uppercase
        PRINT DEST_STRING              ' Display the result, which will be "HELLO WORLD"
        STOP
```

Example 2

```
' Convert the characters from a Quoted Character String to uppercase and place the result into
‘ DEST_STRING

        DEVICE = 18F452                       ' Must be a 16-bit core device for Strings
        DIM DEST_STRING as STRING * 20         ‘ Create a String of 20 characters

        DEST_STRING = TOUPPER ("hello world")  ' Convert to uppercase
        PRINT DEST_STRING              ' Display the result, which will be "HELLO WORLD"
        STOP
```

Example 3

```
' Convert to uppercase from SOURCE_STRING into DEST_STRING using a pointer to
‘ SOURCE_STRING

        DEVICE = 18F452                       ' Must be a 16-bit core device for Strings
        DIM SOURCE_STRING as STRING * 20       ‘ Create a String of 20 characters
        DIM DEST_STRING as STRING * 20         ‘ Create another String
        ' Create a WORD variable to hold the address of SOURCE_STRING
        DIM STRING_ADDR as WORD
        ' Load the source string with characters
        SOURCE_STRING = "hello world"
        ' Locate the start address of SOURCE_STRING in RAM
        STRING_ADDR = VARPTR (SOURCE_STRING)
        DEST_STRING = TOUPPER (STRING_ADDR)        ' Convert to uppercase
        PRINT DEST_STRING                ' Display the result, which will be "HELLO WORLD"
        STOP
```

Example 4

```
' Convert characters from a CDATA table to uppercase and place result into DEST_STRING

        DEVICE = 18F452                          ' Must be a 16-bit core device for Strings
        DIM DEST_STRING as STRING * 20           ‘ Create a String of 20 characters

        DEST_STRING = TOUPPER (SOURCE)           ' Convert to uppercase
        PRINT DEST_STRING                ' Display the result, which will be "HELLO WORLD"
        STOP

' Create a NULL terminated string of characters in code memory
SOURCE:
        CDATA "hello world" , 0
```

See also : **Creating and using Strings**
Creating and using VIRTUAL STRINGS with CDATA, CDATA, LEN
LEFT$, MID$, RIGHT$, STR$, TOLOWER, VARPTR .

UNPLOT

Syntax
UNPLOT *Ypos* , *Xpos*

Overview
Clear an individual pixel on a 64x128 element graphic LCD.

Operators
Xpos can be a constant, variable, or expression, pointing to the X-axis location of the pixel to clear. This must be a value of 0 to 127. Where 0 is the far left row of pixels.
Ypos can be a constant, variable, or expression, pointing to the Y-axis location of the pixel to clear. This must be a value of 0 to 63. Where 0 is the top column of pixels.

Example

```
        DEVICE 16F877
        LCD_TYPE = GRAPHIC              ' Use a Graphic LCD

        ' Graphic LCD Pin Assignments
        LCD_DTPORT = PORTD
        LCD_RSPIN = PORTC.2
        LCD_RWPIN = PORTE.0
        LCD_ENPIN = PORTC.5
        LCD_CS1PIN = PORTE.1
        LCD_CS2PIN = PORTE.2

        DIM XPOS AS BYTE
        ADCON1 = 7                      ' Set PORTA and PORTE to all digital
        ' Draw a line across the LCD
Again:
        FOR XPOS = 0 TO 127
        PLOT 20 , XPOS
        DELAYMS 10
        NEXT
        ' Now erase the line
        FOR XPOS = 0 TO 127
        UNPLOT 20 , XPOS
        DELAYMS 10
        NEXT
        GOTO Again
```

See also : LCDREAD, LCDWRITE, PIXEL, PLOT. See PRINT for circuit.

VAL

Syntax
Variable = **VAL (***Array Variable* , *Modifier***)**

Overview
Convert a Byte Array containing DECIMAL, HEX, or BINARY numeric text into it's integer equivalent.

Operators
Array Variable is a byte array containing the alphanumeric digits to convert and terminated by a NULL (i.e. value 0).
Modifier can be HEX, DEC, or BIN. To convert a HEX string, use the HEX modifier, for BINARY, use the BIN modifier, for DECIMAL use the DEC modifier.
Variable is a variable that will contain the converted value. Floating point characters and variables cannot be converted, and will be rounded down to the nearest integer value.

Example 1

```
' Convert a string of HEXADECIMAL characters to an integer
INCLUDE "PROTON_4.INC"          ' Use the PROTON board for the demo
DIM STRING1[10] AS BYTE         ' Create a byte array as a STRING
DIM WRD1 AS WORD                ' Create a variable to hold result
DELAYMS 500                     ' Wait for PICmicro to stabilise
CLS                             ' Clear the LCD
STR STRING1 = "12AF",0          ' Load the STRING with HEX digits
WRD1 = VAL(STRING1,HEX)         ' Convert the STRING into an integer
PRINT HEX WRD1                  ' Display the integer as HEX
STOP
```

Example 2

```
' Convert a string of DECIMAL characters to an integer
INCLUDE "PROTON_4.INC"          ' Use the PROTON board for the demo
DIM STRING1[10] AS BYTE         ' Create a byte array as a STRING
DIM WRD1 AS WORD                ' Create a variable to hold result
DELAYMS 500                     ' Wait for PICmicro to stabilise
CLS                             ' Clear the LCD
STR STRING1 = "1234",0          ' Load the STRING with DECIMAL digits
WRD1 = VAL(STRING1,DEC)         ' Convert the STRING into an integer
PRINT DEC WRD1                  ' Display the integer as DECIMAL
STOP
```

Example 3

```
' Convert a string of BINARY characters to an integer
INCLUDE "PROTON_4.INC"          ' Use the PROTON board for the demo
DIM STRING1[17] AS BYTE         ' Create a byte array as a STRING
DIM WRD1 AS WORD                ' Create a variable to hold result
DELAYMS 500                     ' Wait for PICmicro to stabilise
CLS                             ' Clear the LCD
STR STRING1 = "1010101010000000",0      ' Load the STRING with BINARY digits
WRD1 = VAL(STRING1,BIN)         ' Convert the STRING into an integer
PRINT BIN WRD1                  ' Display the integer as BINARY
STOP
```

Notes

There are limitations with the **VAL** command when used on a 14-bit core device, in that the array must fit into a single RAM bank. But this is not really a problem, just a little thought when placing the variables will suffice. The compiler will inform you if the array is not fully located inside a BANK, and therefore not suitable for use with the **VAL** command.

This is not a problem with 16-bit core devices, as they are able to access all their memory very easily.

The **VAL** command is not recommended inside an expression, as the results are not predictable. However, the **VAL** command can be used within an **IF-THEN**, **WHILE-WEND**, or **REPEAT-UNTIL** construct, but the code produced is not as efficient as using it outside a construct, because the compiler must assume a worst case scenario, and use **DWORD** comparisons.

```
INCLUDE "PROTON_4.INC"              ' Use the PROTON board for the demo
DIM STRING1[10] AS BYTE             ' Create a byte array as a STRING
DELAYMS 500                         ' Wait for PICmicro to stabilise
CLS                                 ' Clear the LCD
STR STRING1 = "123",0               ' Load the STRING with DEC digits
IF VAL(STRING1,HEX) = 123 THEN      ' Compare the result
PRINT AT 1,1,DEC VAL (STRING1,HEX)
ELSE
PRINT AT 1,1,"NOT EQUAL"
ENDIF
STOP
```

See also: **STR, STR$.**

VARPTR

Syntax

Assignment Variable = **VARPTR (** *Variable* **)**

Overview

Returns the address of the variable in RAM. Commonly known as a pointer to a variable.

Operators

Assignment Variable can be any of the compiler's variable types, and will receive the pointer to the *variable's* address.
Variable can be any variable name used in the BASIC program.

Notes

Be careful if using **VARPTR** to locate the starting address of an array when using a 14-bit device, as arrays can cross bank boundaries, and the finishing address of the array may be in a different bank to its start address. The compiler can track bank changes internally when accessing arrays, but BASIC code generally cannot. For example, the most common use for **VARPTR** is when implementing indirect addressing using the PICmicro's FSR and INDF registers. This is not the case with 16-bit core devices, as the FSR0, 1, and 2 registers can access all memory areas.

WHILE...WEND

Syntax
WHILE *Condition*
Instructions
Instructions
WEND

or

WHILE *Condition* { *Instructions* **:** } **WEND**

Overview
Execute a block of instructions while a condition is true.

Example

```
VAR1 = 1
WHILE VAR1 <= 10
    PRINT DEC VAR1 , " "
    VAR1 = VAR1 + 1
WEND
```

or

```
WHILE PORTA.0 = 1: WEND      ' Wait for a change on the Port
```

Notes
WHILE-WEND, repeatedly executes *Instructions* **WHILE** *Condition* is true. When the *Condition* is no longer true, execution continues at the statement following the **WEND**. *Condition* may be any comparison expression.

See also : IF-THEN, REPEAT-UNTIL, FOR-NEXT.

USBINIT

Syntax
USBINIT

Overview
Initialise the USB hardware of the PICmicro^{tm} and wait until the USB bus is configured and enabled. This instruction may only be used with a PICmicro^{tm} that has an on-chip USB port such as the PIC16C745 or PIC16C765.

Notes
USBINIT needs to be one of the first statements in a program that uses USB communications.

USB communications is a whole lot more complicated than synchronous (**SHIN** and **SHOUT**) and asynchronous (**SERIN**, **SEROUT** etc) communications. There is much more to know about USB operation that can possibly be described in this document, as whole books have been written dealing with USB.

The USB subdirectory, located in the INC folder, contains the Microchip USB libraries modified for the PROTON+ Compiler. USB programs require several additional files to operate correctly, some of which may require modification for your particular application. The files in the USB subdirectory are: -

HIDCLASS.ASM	Modified Microchip HID class assembler file
MOUSDESC.ASM	Descriptor file for mouse demo
USB_CH9.ASM	Modified Microchip USB chapter 9 assembler file
USB_DEFS.INC	Modified Microchip USB definitions file
USB-UGV1.PDF	Microchip USB PDF file

The modifications involved removing all linker specific operands, includes to header files and END instructions. Label names that were the same except for the case have been changed to make them unique. Variable names now have a preceding underscore to help prevent duplicate variable errors in the BASIC program.

A USB program consists of the BASIC source code along with the appropriate USB files, including HIDCLASS.ASM, USB_CH9.ASM, USB_DEFS.INC and a USB descriptor file. The BASIC program must setup an assembler interrupt handler, as most USB operations are handled by interrupts.

When the compiler sees that a PIC16C745 or PIC16C765 is required, it will automatically include the required Microchip files into the BASIC program. However, a DESCRIPTOR file must be created and loaded into the BASIC program. This is done by a **DECLARE**: -

DECLARE USB_DESCRIPTOR "FILENAME"

The above **DECLARE** will load the appropriate DESCRIPTOR file for use with the USB routines. The descriptor file may be in the BASIC program's directory, or located in the USB directory (found in the INC folder). The compiler will first look in the BASIC program's directory, and if the file is there, it will use that, otherwise, it will look in the USB directory. This allows descriptors with the same name to have unique features. If the file named in the **DECLARE** is not found, then an error will be produced.

There are three other **DECLARES** that may be used when implementing USB. These are: -

DECLARE USB_CLASS_FILE = "FILENAME"   ' Point to the CLASS file

This **DECLARE** points to the CLASS file required. Not all USB operation use the HID class, some use a more efficient and unique communications method. However, the PICmicro^{tm} is really only intended for HID class, slow speed communications, so this **DECLARE** may be omitted from the program, and the HIDCLASS.ASM file will automatically be loaded.

DECLARE USB_COUNT_ERRORS TRUE/**FALSE ON/OFF** 1 or 0

The USB routines supplied by Microchip have some error detection pointers built into the software. The above **DECLARE** enables or disables these. To use the error pointers, the following ALIAS's should be created at the top of the BASIC program: -

SYMBOL USB_WRITE_ERROR = _USB_WRT_ERR.**WORD**
SYMBOL USB_BTO_ERROR = _USB_BTO_ERR.**WORD**
SYMBOL USB_OWN_ERROR = _USB_OWN_ERR.**WORD**
SYMBOL USB_BTS_ERROR = _USB_BTS_ERR.**WORD**
SYMBOL USB_DFN8_ERROR = _USB_DFN8_ERR.**WORD**
SYMBOL USB_CRC16_ERROR = _USB_CRC16_ERR.**WORD**
SYMBOL USB_CRC5_ERROR = _USB_CRC5_ERR.**WORD**
SYMBOL USB_PID_ERROR = _USB_PID_ERR.**WORD**

DECLARE USB_SHOW_ENUM TRUE/**FALSE ON/OFF** 1 or 0

The Microchip USB routines can indicate the state of the bus by means of LED's attached to PORTB of the PICmicro^{tm}. The above **DECLARE** enables or disables this feature.

USB Code and Memory Concerns.
The Microchip USB routines occupy the whole of PAGE3 within the PICmicro^{tm}, and also require several RAM spaces. The variable names used by the USB routines are listed below. Make sure you do not use the same variables names in the BASIC program, or a duplicate variable error will be produced: -

_BUFFER_DESCRIPTOR
_BUFFER_DESCRIPTOR#1
_BUFFER_DESCRIPTOR#2
_BUFFER_DATA
_BUFFER_DATA#1
_BUFFER_DATA#2
_BUFFER_DATA#3
_BUFFER_DATA#4
_BUFFER_DATA#5
_BUFFER_DATA#6
_BUFFER_DATA#7
_USBMASKEDINTERRUPTS
_USB_CURR_CONFIG
_USB_STATUS_DEVICE
_USB_DEV_REQ
_USB_ADDRESS_PENDING
_USBMASKEDERRORS
_PIDS

EP0_START
EP0_STARTH
_EP0_END
_EP0_MAXLENGTH
TEMP
TEMP2
_GP_TEMP
_BUF_INDEX
_USB_INTERFACE
_USB_INTERFACE#1
_USB_INTERFACE#2
_USB_INNER
_USB_OUTER
_DEST_PTR
_SOURCE_PTR
_HID_DEST_PTR
_HID_SOURCE_PTR
_USB_COUNTER
_BYTE_COUNTER
_RP_SAVE
_IS_IDLE
_USB_USTAT
_USB_PID_ERR
_USB_PID_ERRH
_USB_CRC5_ERR
_USB_CRC5_ERRH
_USB_CRC16_ERR
_USB_CRC16_ERRH
_USB_DFN8_ERR
_USB_DFN8_ERRH
_USB_BTO_ERR
_USB_BTO_ERRH
_USB_WRT_ERR
_USB_WRT_ERRH
_USB_OWN_ERR
_USB_OWN_ERRH
_USB_BTS_ERR
_USB_BTS_ERRH

The USB information on the Microchip web site needs to be studied carefully. Also, the books "USB Complete", and "USB by example" may be helpful.

See also : USBOUT, USBIN for an example and circuit..

USBIN

Syntax
USBIN *Endpoint*, *Buffer*, *Countvar*, *Label*

Overview
Receive USB data from the host computer and place it into ***Buffer***.

Operators
Endpoint is a constant value (0 - 2) that indicates which ENDPOINT to receive data from.
Buffer is a **BYTE** array consisting of no more than 8 elements. The USB adopted by the PICmicro^{tm}, only allows 8 pieces of data to be received in a single operation.
Countvar is a constant value (2 - 8) that indicates how many bytes are transferred from the ***Buffer***.
Label must be a valid BASIC label, that **USBIN** will jump to in the event that no data is available.

Example 1

```
        DIM BUFFER[8] AS BYTE
TRY_AGAIN:
        USBIN 1, BUFFER, 4, TRY_AGAIN
```

Example 2

```
' Program to demonstrate the USB commands
' Moves the computer's cursor in a small square

        DEVICE = 16C765
        XTAL = 24

        USB_DESCRIPTOR = "MOUSDESC.ASM"      ' Point to the DESCRIPTOR file
        ' Point to the CLASS file (not always required)
        USB_CLASS_FILE = "HIDCLASS.ASM"
        USB_COUNT_ERRORS = False             ' Enable/Disable error monitors
        USB_SHOW_ENUM = False                ' Enable/Disable PORTB monitor

        DIM BUFFER[8] AS BYTE
        DIM LOOPCNT AS BYTE
        DIM DIRECTION AS        Byte
        SYMBOL LED = PORTA.5                 ' Red LED on PORTA bit 5

' Define the hardware interrupt handler for the USB vector
        ON_INTERRUPT GOTO USBINT
'-------------------------------------------------------------------------------
      GOTO START                             ' Jump over the interrupt handler
'-------------------------------------------------------------------------------
' Assembly language interrupt handler to check interrupt source and vector to it
USBINT:
        MOVLW (Service@USBInt >> 8)
        MOVWF PCLATH                         ' Point PCLATH to the USB subroutines
        BTFSC PIR1, USBIF                    ' Make sure it is a USB interrupt
        CALL (Service@USBInt)                ' Implement the USB subroutines
        CONTEXT RESTORE                      ' Restore saved registers
'-------------------------------------------------------------------------------
```

```
' *** THE MAIN PROGRAM LOOP STARTS HERE ***
START:
        ALL_DIGITAL = True                      ' Make PORTA, and PORTE all digital
        LOW LED
        USBINIT                                 ' Initialise USB and wait until configured
        HIGH LED                                ' Turn on LED for USB ready
        STR BUFFER = 0,0,0,0,0,0,0,0            ' Clear the buffer array
' Move the computer's cursor in a small square
MOVECURSOR:
        DIRECTION = 0
        REPEAT
        LOOPCNT = 0
        REPEAT
        IF DIRECTION = 0 THEN BUFFER#1 = 0 : BUFFER#2 = -2 : GOTO SENDIT
        IF DIRECTION = 1 THEN BUFFER#1 = -2 : BUFFER#2 = 0 : GOTO SENDIT
        IF DIRECTION = 2 THEN BUFFER#1 = 0 : BUFFER#2 = 2 : GOTO SENDIT
        IF DIRECTION = 3 THEN BUFFER#1 = 2 : BUFFER#2 = 0
SENDIT:
        USBOUT 1, BUFFER, 4, SENDIT             ' Send BUFFER to endpoint 1
        INC LOOPCNT
        UNTIL LOOPCNT = 16                      ' 16 steps in each direction
        INC DIRECTION
        UNTIL DIRECTION = 4
        GOTO MOVECURSOR                         ' Do it forever
```

A suitable circuit for the above example is shown below: -

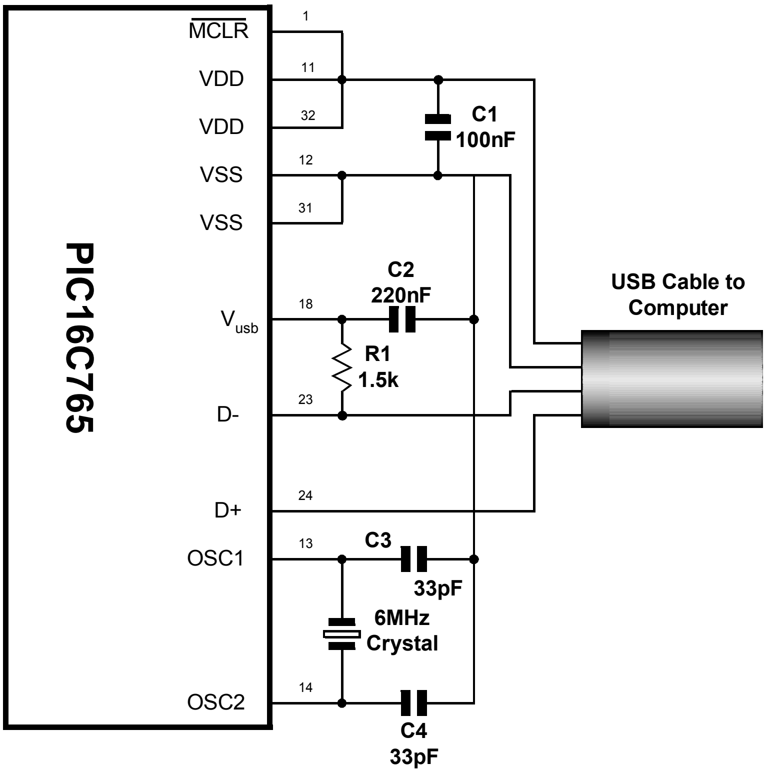

Notes

USB communications is a whole lot more complicated than synchronous (**SHIN** and **SHOUT**) and asynchronous (**SERIN**, **SEROUT** etc) communications. There is much more to know about USB operation that can possibly be described in this help file, as whole books have been written dealing with USB.

The USB information on the Microchip web site needs to be studied carefully. Also, the books "USB Complete", and "USB by example" may be helpful.

See also : **USBINIT, USBOUT.**

USBOUT

Syntax
USBOUT *Endpoint*, *Buffer*, *Countvar*, *Label*

Overview
Take ***Countvar*** number of bytes from the array variable ***Buffer*** and send them to the USB ***Endpoint***.

Operators
Endpoint is a constant value (0 - 2) that indicates which ENDPOINT to send data to.
Buffer is a **BYTE** array consisting of no more than 8 elements. The USB adopted by the PICmicro^{tm}, only allows 8 pieces of data to be sent in a single operation.
Countvar is a constant value (2 - 8) that indicates how many bytes are transferred to the ***Buffer***.
Label must be a valid BASIC label, that **USBOUT** will jump to in the event that the USB buffer does not have room for the data because of a pending transmission.

Example

```
        DIM BUFFER[8] AS BYTE
TRY_AGAIN:
        USBOUT 1, BUFFER, 4, TRY_AGAIN
```

Notes
The USB subdirectory contains modified Microchip USB libraries. USB programs requires several additional files to operate, some of which will require modification for your particular application. See the text file in the USB subdirectory for more information on the USB commands.

USB communications is a whole lot more complicated than synchronous (**SHIN** and **SHOUT**) and asynchronous (**SERIN**, **SEROUT** etc) communications. There is much more to know about USB operation that can possibly be described in this help file, as whole books have been written dealing with USB.

The USB information on the Microchip web site needs to be studied carefully. Also, the books "USB Complete", and "USB by example" may be helpful.

See also : **USBINIT, USBIN for an example and circuit.**

XIN

Syntax

XIN *DataPin* , *ZeroPin* , {*Timeout* , *Timeout Label*} , **[***Variable*{,...}**]**

Overview

Receive X-10 data and store the House Code and Key Code in a variable.

Operators

DataPin is a constant (0 - 15), Port.Bit, or variable, that receives the data from an X-10 interface. This pin is automatically made an input to receive data, and should be pulled up to 5 Volts with a 4.7KΩ resistor.
ZeroPin is a constant (0 - 15), Port.Bit, or variable, that is used to synchronise to a zero-cross event. This pin is automatically made an input to received the zero crossing timing, and should also be pulled up to 5 Volts with a 4.7KΩ resistor.
Timeout is an optional value that allows program continuation if X-10 data is not received within a certain length of time. Timeout is specified in AC power line half-cycles (approximately 8.33 milliseconds).
Timeout Label is where the program will jump to upon a timeout.

Example

```
        DIM HOUSEKEY AS WORD
        CLS
LOOP:
        ' Receive X-10 data, go to NODATA if none
        XIN PORTA.2 , PORTA.0 , 10 , NODATA , [HOUSEKEY]
        ' Display X-10 data on an LCD
        PRINT AT 1 , 1 , "House=" , @HOUSEKEY.BYTE1 , "Key=" , @HOUSEKEY.BYTE0
        GOTO LOOP                                   ' Do it forever
NODATA:
        PRINT "NO DATA"
        STOP
```

XOUT and XIN Declares

In order to make the **XIN** command's results more in keeping with the BASIC Stamp interpreter, two declares have been included for both **XIN** and XOUT These are.

DECLARE XOUT_TRANSLATE = On/**Off**, True/**False** or 1/0

and

DECLARE XIN_TRANSLATE = On/**Off**, True/**False** or 1/0

Notes

XIN processes data at each zero crossing of the AC power line as received on ***ZeroPin***. If there are no transitions on this line, **XIN** will effectively wait forever.

XIN is used to receive information from X-10 devices that can transmit the appropriate data. X-10 modules are available from a wide variety of sources under several trade names. An interface is required to connect the PICmicro^{tm} to the AC power line. The TW-523 for two-way X-10 communications is required by **XIN**. This device contains the power line interface and isolates the PICmicro^{tm} from the AC line.

If ***Variable*** is a **WORD** sized variable, then each House Code received will be stored in the upper 8-bits of the **WORD** And each received Key Code will be stored in the lower 8-bits of the **WORD** variable. If ***Variable*** is a **BYTE** sized variable, then only the Key Code will be stored.

The House Code is a number between 0 and 15 that corresponds to the House Code set on the X-10 module A through P.

The Key Code can be either the number of a specific X-10 module or the function that is to be performed by a module. In normal operation, a command is first sent, specifying the X-10 module number, followed by a command specifying the desired function. Some functions operate on all modules at once so the module number is unnecessary. Key Code numbers 0-15 correspond to module numbers 1-16.

WARNING. Under no circumstances should the PICmicro^{tm} be connected directly to the AC power line. Voltage potentials carried by the power line will not only instantly destroy the PICmicro^{tm}, but could also pose a serious health hazard.

See also : XOUT.

XOUT

Syntax

XOUT *DataPin* , *ZeroPin* , **[***HouseCode\KeyCode* {*\Repeat*} { , ...}**]**

Overview

Transmit a HouseCode followed by a KeyCode in X-10 format.

Operators

DataPin is a constant (0 - 15), Port.Bit, or variable, that transmits the data to an X-10 interface. This pin is automatically made an output.
ZeroPin is a constant (0 - 15), Port.Bit, or variable, that is used to synchronise to a zero-cross event. This pin is automatically made an input to received the zero crossing timing, and should also be pulled up to 5 Volts with a 4.7KΩ resistor.
HouseCode is a number between 0 and 15 that corresponds to the House Code set on the X-10 module A through P. The proper HouseCode must be sent as part of each command.
KeyCode can be either the number of a specific X-10 module, or the function that is to be performed by a module. In normal use, a command is first sent specifying the X-10 module number, followed by a command specifying the function required. Some functions operate on all modules at once so the module number is unnecessary. KeyCode numbers 0-15 correspond to module numbers 1-16.
Repeat is an optional operator, and if it is NOT included, then a repeat of 2 times (the minimum) is assumed. ***Repeat*** is normally reserved for use with the X-10 Bright and Dim commands.

Example

```
        DIM HOUSE AS BYTE
        DIM UNIT AS BYTE
' Create some aliases of the keycodes
        SYMBOL UnitOn = %10010              ' Turn module on
        SYMBOL UnitOff = %11010             ' Turn module off
        SYMBOL UnitsOff = %11100            ' Turn all modules off
        SYMBOL LightsOn = %10100            ' Turn all light modules on
        SYMBOL LightsOff = %10000           ' Turn all light modules off
        SYMBOL Bright = %10110              ' Brighten light module
        SYMBOL DimIt = %11110               ' Dim light module
' Create aliases for the pins used
        SYMBOL DATAPIN = PORTA.1
        SYMBOL ZERO_C = PORTA.0
        HOUSE = 0                           ' Set house to 0 (A)
        UNIT = 8                            ' Set unit to 8 (9)
        ' Turn on unit 8 in house 0
        XOUT DATAPIN ,ZERO_C,[HOUSE \ UNIT,HOUSE \ UnitOn ]
        XOUT DATAPIN ,ZERO_C,[HOUSE \ LightsOff ]' Turn off all the lights in house 0
        XOUT DATAPIN ,ZERO_C,[HOUSE \ 0] ' Blink light 0 on and off every 10 seconds
LOOP:
        XOUT DATAPIN ,ZERO_C,[HOUSE \ UnitOn ]
        DELAYMS 10000                               ' Wait 10 seconds
        XOUT DATAPIN ,ZERO_C,[HOUSE \ UnitOff ]
        DELAYMS 10000                               ' Wait 10 seconds
        GOTO LOOP
```

XOUT and XIN Declares

In order to make the **XOUT** command's results more in keeping with the BASIC Stamp interpreter, two declares have been included for both XIN and **XOUT**. These are.

DECLARE XOUT_TRANSLATE = On/**Off**, True/**False** or 1/0
and
DECLARE XIN_TRANSLATE = On/**Off**, True/**False** or 1/0

Notes

XOUT only transmits data at each zero crossing of the AC power line, as received on ***ZeroPin***. If there are no transitions on this line, **XOUT** will effectively wait forever.

XOUT is used to transmit information from X-10 devices that can receive the appropriate data. X-10 modules are available from a wide variety of sources under several trade names. An interface is required to connect the PICmicro^{tm} to the AC power line. Either the PL-513 for send only, or the TW-523 for two-way X-10 communications are required. These devices contain the power line interface and isolate the PICmicro^{tm} from the AC line.

The KeyCode numbers and their corresponding operations are listed below: -

KeyCode	**KeyCode No.**	**Operation**
UnitOn	%10010	Turn module on
UnitOff	%11010	Turn module off
UnitsOff	%11100	Turn all modules off
LightsOn	%10100	Turn all light modules on
LightsOff	%10000	Turn all light modules off
Bright	%10110	Brighten light module
Dim	%11110	Dim light module

Wiring to the X-10 interfaces requires 4 connections. Output from the X-10 interface (zero crossing and receive data) are open-collector, which is the reason for the pull-up resistors on the PICmicro^{tm}.

Wiring for each type of interface is shown below: -

PL-513 Wiring

Wire No.	**Wire Colour**	**Connection**
1	**Black**	Zero crossing output
2	**Red**	Zero crossing common
3	**Green**	X-10 transmit common
4	**Yellow**	X-10 transmit input

TW-523 Wiring

Wire No.	**Wire Colour**	**Connection**
1	**Black**	Zero crossing output
2	**Red**	Common
3	**Green**	X-10 receive output
4	**Yellow**	X-10 transmit input

WARNING. Under no circumstances should the PICmicro^{tm} be connected directly to the AC power line. Voltage potentials carried by the power line will not only instantly destroy the PICmicro^{tm}, but could also pose a serious health hazard.

See also : XIN.

Protected Compiler Words

Below is a list of protected words that the compiler uses internally. Be sure not to use any of these words as variable or label names, or errors will be produced.

ABS, ACTUAL_BANKS, ADC_RESOLUTION, ADIN, ADIN_RES, ADIN_STIME, ADIN_TAD
ALL_DIGITAL, ASM, AVAILABLE_RAM
BANK0_END, BANK0_START, BANK10_END, BANK10_START, BANK11_END, BANK11_START
BANK12_END, BANK12_START
BANK13_END, BANK13_START, BANK14_END, BANK14_START, BANK15_END,
BANK15_START
BANK1_END, BANK1_START
BANK2_END, BANK2_START, BANK3_END, BANK3_START, BANK4_END, BANK4_START
BANK5_END, BANK5_START
BANK6_END, BANK6_START, BANK7_END, BANK7_START, BANK8_END, BANK8_START
BANK9_END, BANK9_START
BANK_SELECT_SWITCH, BANKA_END, BANKA_START, BIT, BOOTLOADER, BOX, BRANCH
BRANCHL, BRESTART, BREAK, BSTART, BSTOP, BUS_DELAYMS, BUSACK
BUSIN, BUSOUT
BUTTON, BUTTON_DELAY, BYTE, CALL, CCP1_PIN, CCP2_PIN, CASE, CDATA
CERASE, CIRCLE, CLEAR, CLEARBIT, CLS, CON, CONFIG, CONTEXT, CORE, COS COUNT,
COUNT_ERRORS, COUNTER, CREAD, CURSOR, CWRITE, CF_READ, CF_WRITE, CF_INIT,
CF_SECTOR, DATA, DB, DC
DCD, DE, DEC, DECLARE, DEFINE, DELAYMS, DELAYUS, DEVICE
DIG, DIM, DISABLE, DIV2, DT, DTMFOUT, DW, DWORD, EDATA
EEPROM_SIZE, ELSE, ELSEIF, ENABLE, END, ENDCASE ENDASM, ENDIF, ENDM
EQU, EREAD, EWRITE, EXITM, FILE_REF, FLASH_CAPABLE
FLOAT, FONT_ADDR, FOR, FREQOUT, FSRSAVE
GETBIT, GLCD_CS_INVERT, GLCD_FAST_STROBE, GOSUB, GOTO
HBRESTART, HBSTART, HBSTOP, HBUS_BITRATE, HBUSACK
HBUSIN, HBUSOUT, HIGH, HPWM, HRSIN, HRSOUT, HSERIAL_BAUD
HSERIAL_CLEAR, HSERIAL_PARITY, HSERIAL_RCSTA, HSERIAL_SPBRG
HSERIAL_TXSTA
I2CREAD, I2CWRITE, IF, INC, INCLUDE, INKEY, INPUT, INTERNAL_BUS
INTERNAL_FONT, KEYPAD_PORT, KEYBOARD_IN
LCD_CS1PIN, LCD_CS2PIN, LCD_DTPIN, LCD_DTPORT, LCD_ENPIN
LCD_INTERFACE, LCD_LINES, LCD_RSPIN, LCD_RWPIN, LCD_TYPE
LCDOUT, LCDREAD, LCDWRITE, LET, LIBRARY, LINE, LOADBIT, LOCAL
LOOKDOWN, LOOKDOWNL, LOOKUP, LOOKUPL, LOW, LREAD, LREAD8,
LREAD16, LREAD32, MACRO_PARAMS, MAX, MIN, MSSP_TYPE, MOUSE_IN, NCD
NEXT, ON_INTERRUPT, ON_LOW_INTERRUPT, ONBOARD_ADC, ONBOARD_UART
ONBOARD_USB, OREAD, ORG, OUTPUT, OWRITE
PAUSE, PAUSEUS, PEEK, PEEKCODE, PIC_PAGES
PIXEL, PLOT, POKE, POKECODE, PORTB_PULLUPS
POT, PRINT, PSAVE, PULSIN, PULSIN_MAXIMUM
PULSOUT, PWM, RAM_BANK, RAM_BANKS
RANDOM, RCIN, RCTIME, READ, REM, REMARKS
REPEAT, RES, RESTORE, RESUME, RETURN, REV
RSIN, RSIN_MODE, RSIN_PIN, RSIN_TIMEOUT, RSOUT

RSOUT_MODE, RSOUT_PACE, RSOUT_PIN, S_ASM
SCL_PIN, SDA_PIN, SERIAL_BAUD, SEED, SELECT, SERIAL_DATA
SERIN, SERIN2, SEROUT, SEROUT2, SERVO
SET, SETBIT, SET_DEFAULTS, SET_OSCCAL, SHIFT_DELAYUS
SHIN, SHOUT, SIN, SLEEP, SLOW_BUS, SNOOZE
SOUND, SOUND2, SQR, SSAVE, STEP, STOP, STR, SWAP, SYMBOL
THEN, TO, TOGGLE
UNPLOT, UNTIL, UPPER, USB_CLASS_FILE
USB_DESCRIPTOR, USB_SHOW_ENUM, USBIN
USBINIT, USBOUT
VAR, VAL, VARPTR, WATCHDOG, WEND, WHILE, WORD
WRITE, WSAVE, XIN, XOUT, XTAL

NOTES.