APPLICATION SHEET ANCRCT-4

Precision Rectifier Circuit for CT Signal Conditioning

Many times, the designer wishes to generate a DC signal from an AC current transformer for input to a PLC or data acquisition system, or even as part of a current or motor controller. Creating DC from an AC source creates problems with diode voltage drops and the variances over temperature and current. The following circuit provides an accurate method for creating this DC signal.

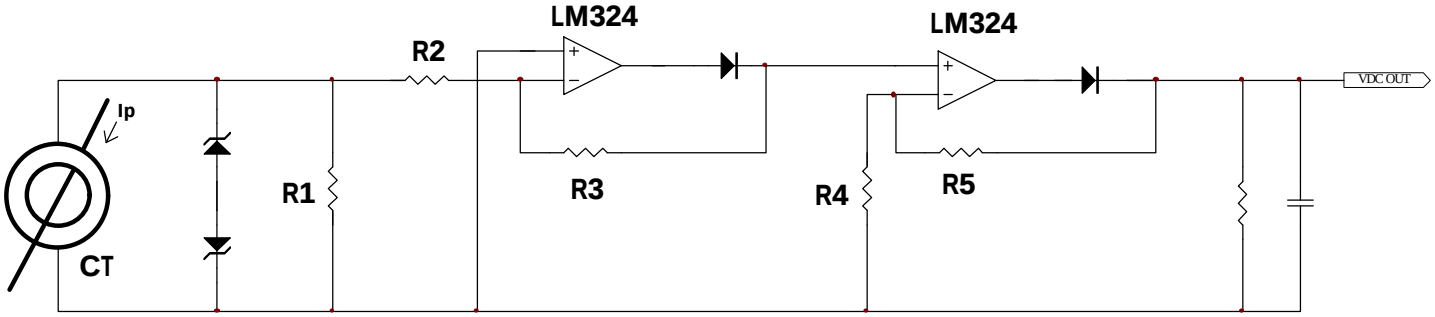

APPLICATION AND LIMITATIONS

- The CT secondary current is applied to the resistor R1, which generates a voltage equal to the primary current divided by the turns ratio and multiplied by the value of R1. This AC voltage is rectified by the first op amp, and then amplified by the second op amp.
- The gain of the first stage is always kept at 1 or unity (R2 = R3) to guarantee symmetry of the rectified waveform. R2 should be chosen at least 10 times greater than R1 for proper accuracy.
- The gain of the second stage is R5/R4 + 1. This gain is chosen to get the desired output DC voltage for the designed input voltage.
- The main advantage of this circuit is the removal of the diode drop as a variance in the signal. DC can be generated directly from R1 by applying the AC voltage to a diode bridge. However, the AC voltage required to do this must be greater than 2 diode voltage drops, or over 2 VAC. This limits the designer to use a silicon steel core that can generate enough voltage before going into saturation. By using the above circuit, the AC voltage input can be very low (10-100 mV) and then amplified to the level desired. This then allows the designer to choose smaller core devices and nickel core devices which saturate at low voltages. Accuracy and cost are both improved.
- Use standard op amp design guidelines when setting up this circuit. Keep resistors at 1 M ohm or less, and keep gains to 100 or less.
- The output must be filtered for pure DC. The RC output network shown should be designed with a time constant at least 10 times greater than the period of the waveform sensed. For 60 Hertz, use a time constant of 1/6. For 400 Hz, use a time constant of 1/40, minimum.