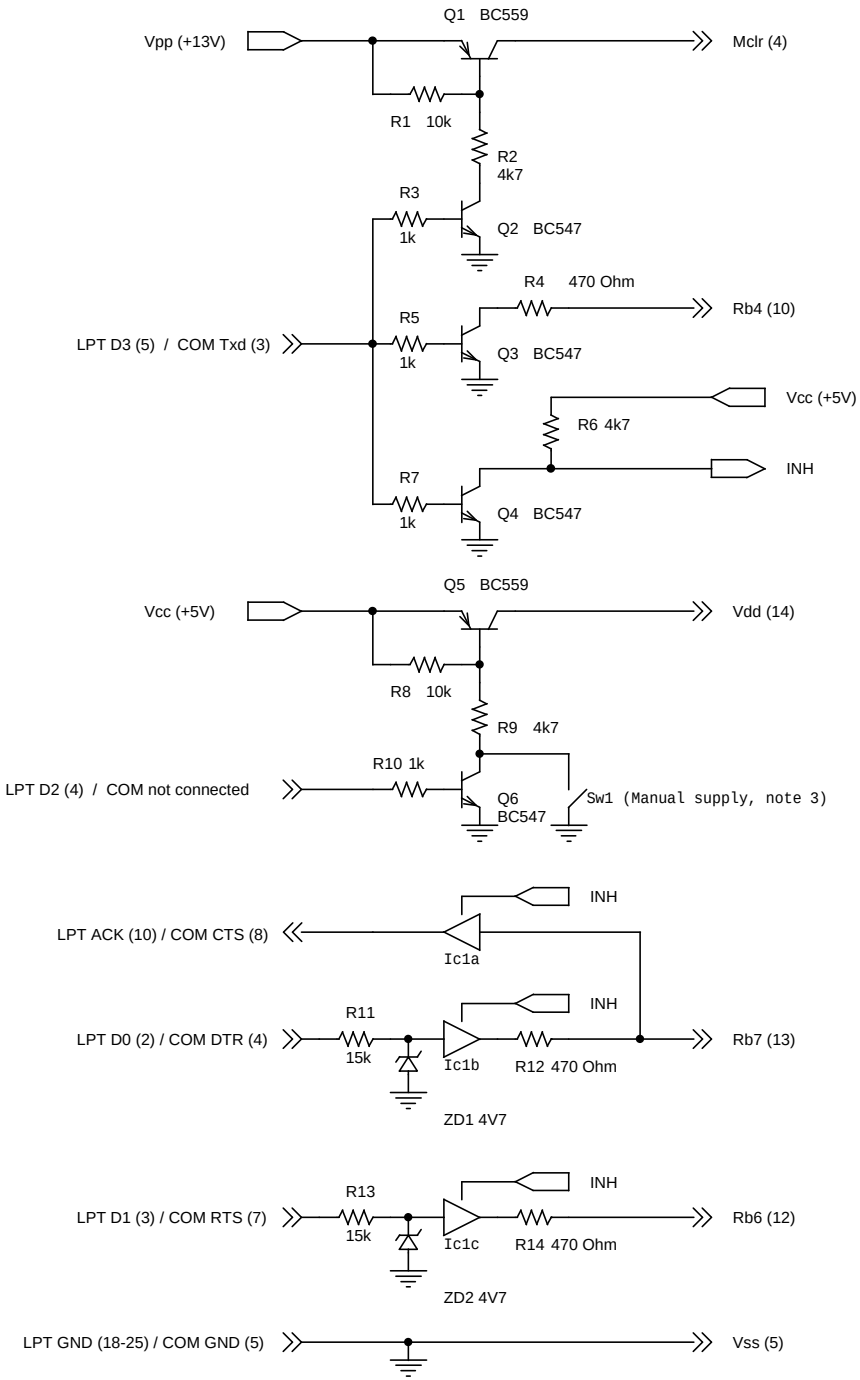

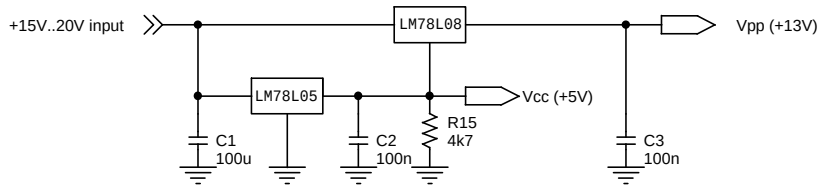

NEW!
Added for 627/628 programming

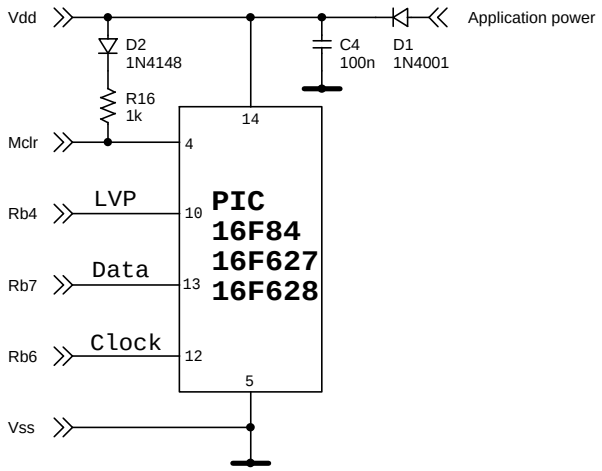

Note 1: The programming voltages are critical! During programming Vdd must be 4.75V....5.25V and Mclr must be 12.75V...13.25V.

Note 2: SW1 manual supply, in case of absence of application power. When COM port driving is used the circuitry (Q5,R8,R9,Q6,R10,Sw1) can be exchanged for one single switch connecting Vcc (+5V) to Vdd.

Note 3: Ic1a..c 74HCT125 (connect pin 14 to Vcc (+5V) and pin 7 to ground (Vss).

Note 4: COM port pin count equals 9 (not 25).

Note 5: This programmer is in steady state floating to w.r.t. the application circuit.

Title	In Circuit Serial Programmer Pic 16F627 / 628 by dB Himself	
Size A4	Document Number dB Programmer	Rev 1.00
Date: Sunday, January 19, 2003	Sheet 1 of 1	