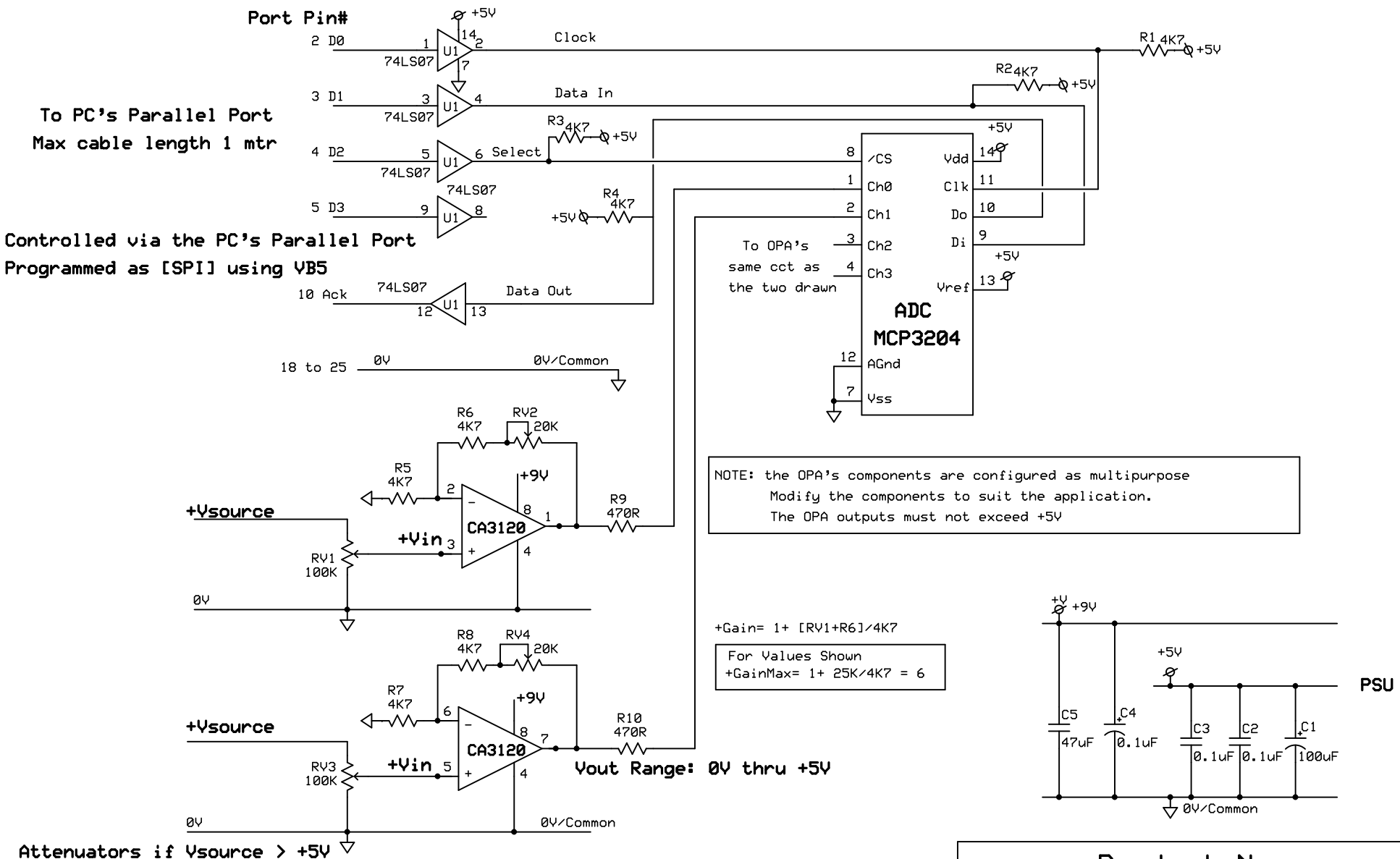
Port Pin#
2 D0
3 D1
4 D2
5 D3
10 Ack
18 to 25
0V
0V/Common
74LS07
U1
+5V
Clock
Data In
Select
Data Out
R1 4K7
R2 4K7
R3 4K7
R4 4K7
To PC's Parallel Port
Max cable length 1 mtr
Controlled via the PC's Parallel Port
Programmed as [SPI] using VB5
/CS
Ch0
Ch1
Ch2
Ch3
AGnd
Vss
Vdd
Clk
Do
Di
Vref
ADC
MCP3204
To OPA's
same cct as
the two drawn
NOTE: the OPA's components are configured as multipurpose
Modify the components to suit the application.
The OPA outputs must not exceed +5V
R6 4K7
RV2 20K
R5 4K7
+9V
CA3120
R9 470R
+Vsource
+Vin
RV1 100K
R8 4K7
RV4 20K
R7 4K7
R10 470R
RV3 100K
Vout Range: 0V thru +5V
+Gain= 1+ [RV1+R6]/4K7
For Values Shown
+GainMax= 1+ 25K/4K7 = 6
PSU
C5 47uF
C4 0.1uF
C3 0.1uF
C2 0.1uF
C1 100uF
Attenuators if Vsource > +5V
Adj RV1/RV2 to limit Vin to +5V
Project Name
MCP3204b to PC Parallel
esp1
Rev 1.0
08/10/2008
Quad 12Bit ADC