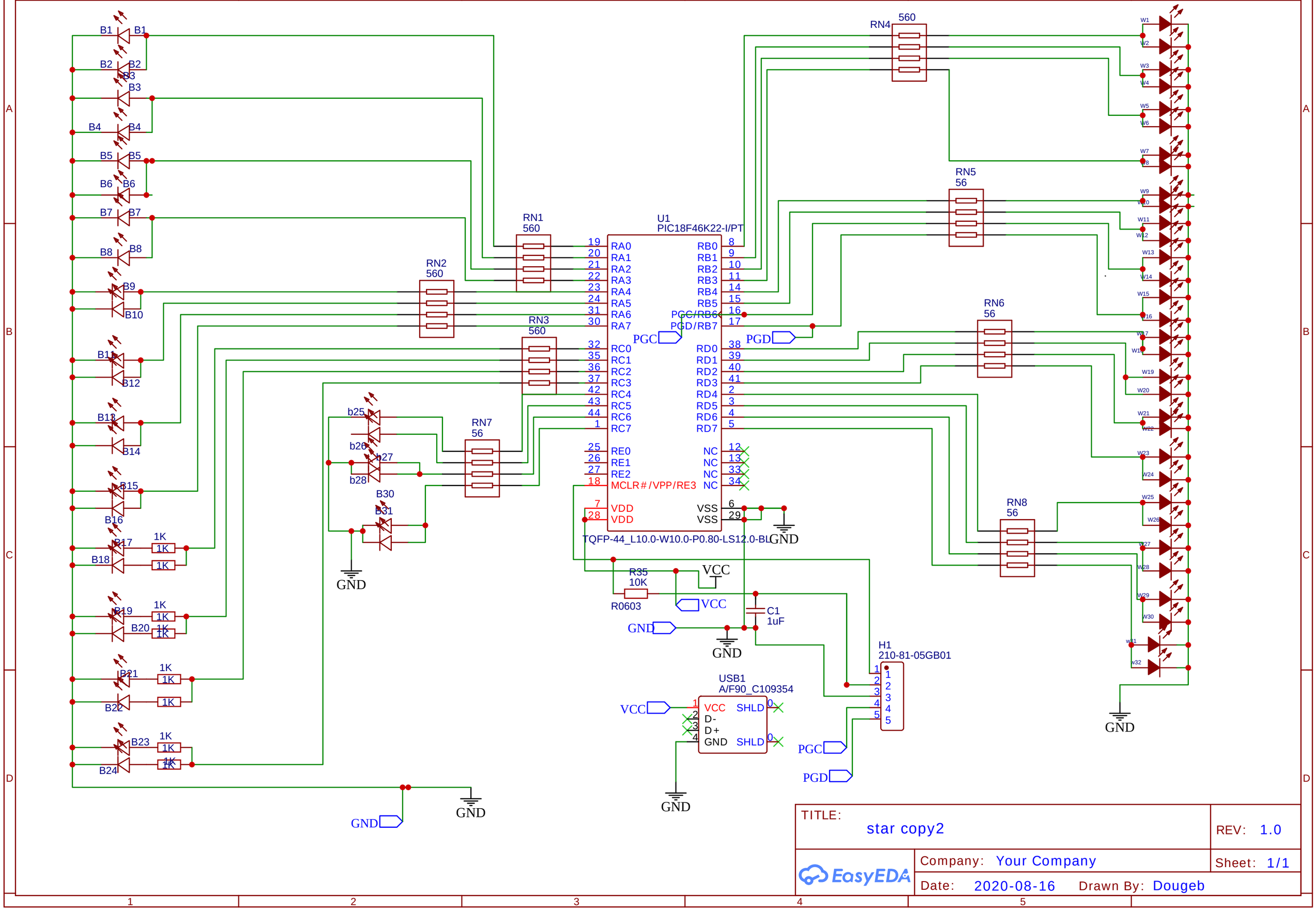
U1
PIC18F46K22-I/PT
TQFP-44_L10.0-W10.0-P0.80-LS12.0-BL
RN1
560
RN2
560
RN3
560
RN4
560
RN5
56
RN6
56
RN7
56
RN8
56
R35
10K
R0603
C1
1uF
H1
210-81-05GB01
USB1
A/F90_C109354
PGC
PGD
VCC
GND
TITLE:
star copy2
REV: 1.0
Company: Your Company
Sheet: 1/1
Date: 2020-08-16
Drawn By: Dougeb
EasyEDA