.options plotwinsize=0 reltol=0.01 abstol=1u vntol=1m gmin=100p method=gear

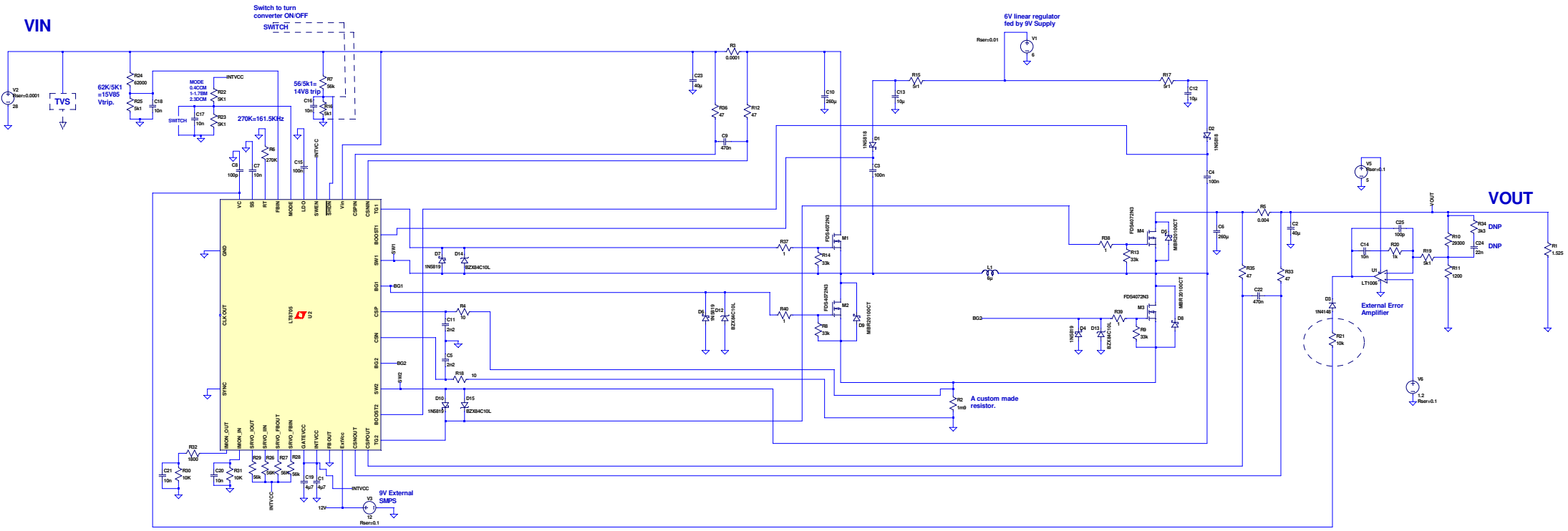

--- C:\forum\lt8705\LT8705_for.asc ---