Arun Micro PGC2 Ion Gauge Controller
Electrometer circuit alternative

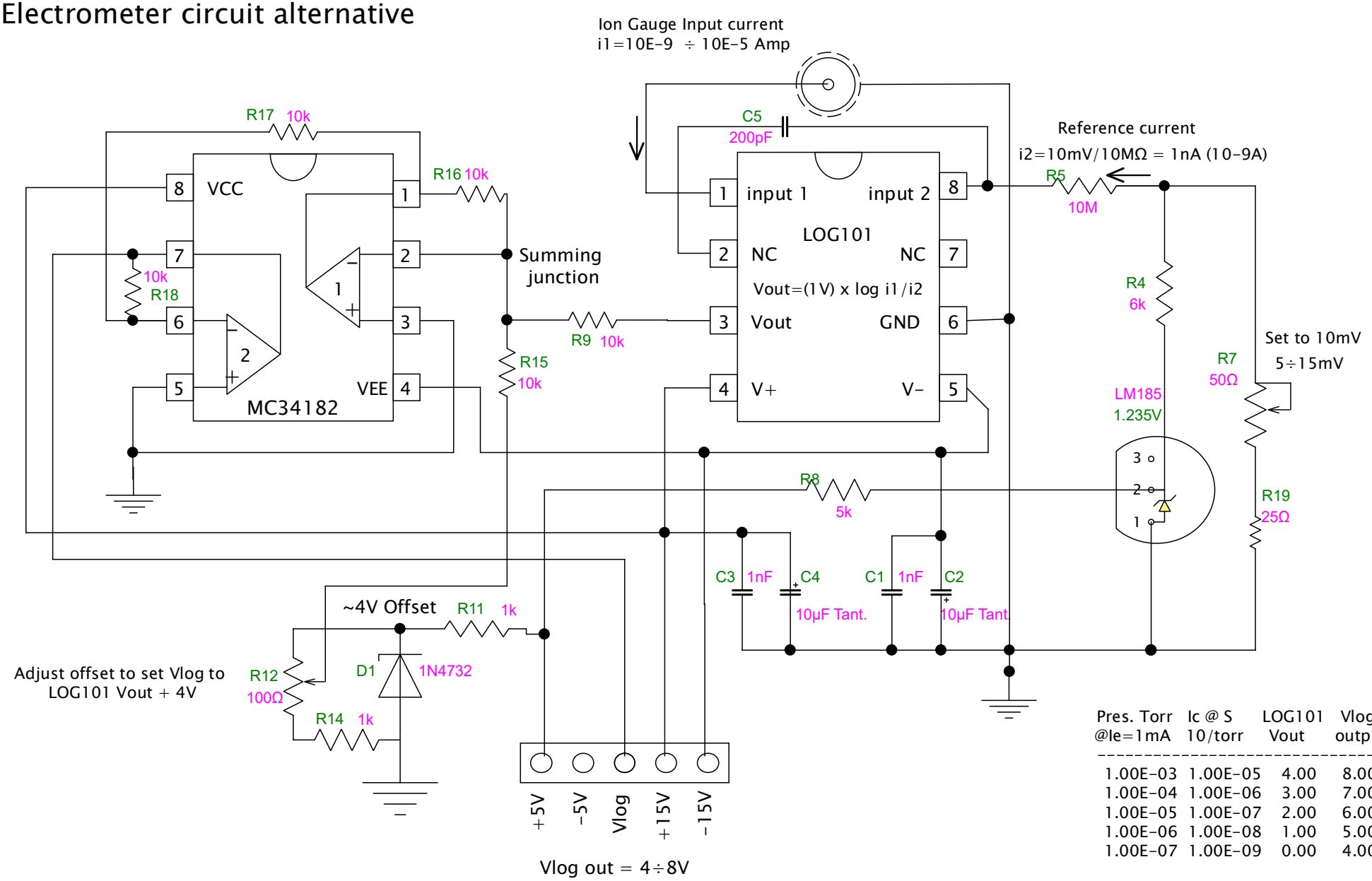

Pres. Torr @Ie=1mA	Ic @ S 10/torr	LOG101 Vout	Vlog output
1.00E-03	1.00E-05	4.00	8.00
1.00E-04	1.00E-06	3.00	7.00
1.00E-05	1.00E-07	2.00	6.00
1.00E-06	1.00E-08	1.00	5.00
1.00E-07	1.00E-09	0.00	4.00

25-12-19