PREPARED BY: DATE	SHARP	SPEC No. LA-01501C
		FILE No.
		ISSUE Jul. 1.1994
APPROVED BY: DATE		PAGE 17
	LIQUID CRYSTAL DISPLAY GROUP SHARP CORPORATION	APPLICABLE DIVISION
	SPECIFICATION	☐ DUTY DEVELOPMENT CENTER ☐ TFT DEVELOPMENT CENTER ☐ LCD PRODUCTS DEVELOPMENT CENTER ☑ EL PRODUCTION DEPT.

SPECIFICATION FOR

EL Display Unit

MODEL No. L J 5 1 A U 2 7

☐ CUSTOMER'S APPROVAL

DATE _____

BY _____

PRESENTED

BY Hiroshi Kishishita

H. Kishishita
Department General Manager
EL Production Department
Nara Factory
Liquid Crystal Display Group
SHARP CORPORATION

SHARP

RECORDS OF REVISION

MODEL No. LJ51AU27

DOC. FIRST ISSUE

IDENT. DATA No.

DATE	REF. PAGE PARAGRAPH DRAWING No.	REVISED No.	SUMMARY	CHECK & APPROVAL
Dec. 24. '92	Page 2	1	Add Note 1) : Survival temperature.	T. Ohba
	Page 2, 3	2	Add the figure based on SI units.	
	Page 3, 4	3	Change the symbol of luminance B → L	
Apr. 14, '94	Page 2,3,6,7	4	Elimination of former units.	
	Page 1,3	5	According as the revissed LCD group standards.	H. Kurokuta
	Page 13	6	Add item 5 to Cautions for Operation	
Jul. 1. '94	Page. 11, 12	7	Revision of drowing.	
	Page. 14	8	Change of signal input block.	
	Page. 15	9	Changes of fuse model and fuse's maker.	H. Kurokuta
	Page. 17	10	Add the figure of packing style.	

SHARP

1. Application

This data sheet is to introduce the specification of EL display unit, LJ51AU27.

2. Overview

The Sharp EL display unit consists of a thin film EL panel, high voltage MOSICs for panel driving and a display control circuit. By supplying four input signals of LS-TTL level and DC power supplies of +5 V, +15 V arbitrary graphs and characters can be displayed.

3. Mechanical Specifications △5

Parameter		Specification Width x Height x Depth	Unit
Outline dimensions	Main unit	228.5 x 148.5 x 20.5 (34*)	mm
	DC-DC conv.	156 x 35 x 18.6	mm
Number of matrix electrodes		512 x 256	--
Active area		191.9 x 95.9	mm
Dot pitch		0.375 x 0.375	mm
Dot pitch ratio		1 x 1	mm
Dot size		0.275 x 0.225	mm
Weight	Main unit	590 (650*)	g
	DC-DC conv.	60	g

Note) *with mounted DC-DC converter board.

4. Absolute Maximum Ratings

4 – 1 Electrical absolute maximum ratings

(Ta=25 ℃)

Parameter	Symbol	Rating	Unit
Interface signal (Logic "H")	V_{IH}	+5.5	V
Interface signal (Logic "L")	V_{IL}	-0.5	V
Supply voltage (Logic)	V_L	+7	V
Supply voltage (panel drive)	V_D	+18	V

SHARP

4 – 2 Environmental conditions ⚠2 ⚠4

Parameter	Tstg		Topr ⚠ Note 1)		Remark
	Min.	Max.	Min.	Max.	
Ambient temperature	-40 ℃	+80 ℃	-5 ℃	+55 ℃	
Humidity	Note 2)		Note 1)		No condensation
Vibration	Note 3)		———		No operating
Shock	Note 4)		———		No operating

⚠ Note 1) Survival temperature: -15 ℃ to +55 ℃
No permanent damage will occur.

Note 2) Ta≦40 ℃ …… 95 % RH Max
Ta>40 ℃ …… Absolute humidity shall be less than Ta=40 ℃/95 % RH.

Note 3) 5 ~ 55 Hz Frequency range
Sweep time ; 15 min each axis
Dwell at resonance ; 10 min each resonance
Peak-to-peak
amplitude ; 3.17 mm over 5 ~ 10 Hz range
; 1.52 mm over 10 ~ 25 Hz range
; 0.38 mm over 25 ~ 55 Hz range

55 ~ 500 Hz Frequency range
Sweep time ; 120 min each axis
Dwell at resonance ; 30 min each resonance
Peak-to-peak
amplitude ; 30 m/s² peak acceleration

Note 4) Acceleration ; 981 m/s²
Pulse width ; 4 ms
3 times for each direction of ±X/±Y/±Z.

5. Electrical Characteristics (Ta=25 ℃)

Parameter	Symbol	Rating			Unit
		Min.	Typ.	Max.	
Supply voltage (Logic)	V_L	+ 4.75	+ 5.0	+ 5.25	V
Supply current (Logic, V_L=+5 V)	I_L	100	—	500	mA
Supply voltage (Panel drive)	V_D	+ 14.25	+ 15.0	+ 15.75	V
Supply current (Panel drive, V_D=+15 V)	I_D	40	—	700	mA
Total power (V_L=+5 V, V_D=+15 V)	P_T	—	7	—	W

SHARP

6. Optical Characteristics ④ ⑤

(Ta=25 ℃)

Parameter	Symbol	Condition	Min.	Typ.	Max.	Unit	Remark
Luminance	L_{ON}	All dots lit	78.8	115	—	cd/m²	Note 1)
OFF luminance	L_{OFF}	All dots turned off	—	—	3.4	cd/m²	
Luminance distribution	ΔL_{DIS}	All dots lit	—	—	30	%	
Fill factor			—	0.44	—		Note 2)
Shadowing characteristics	ΔL_{SD}	fixed pattern	—	2	—	%	Note 3)
Viewing angle			—	160	—	°	

Note 1) Average luminance measured at the five circular windows (R1~R5) shown in Fig.1 (Circular window diameter: ϕ 13 mm)

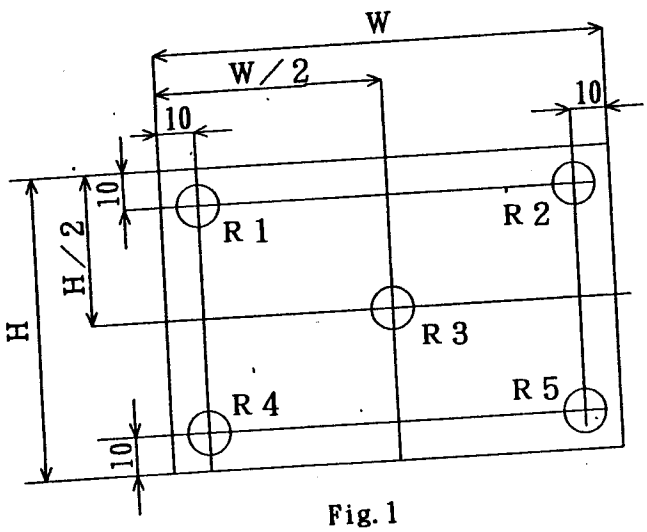

Fig.1

H 95.9 : Height of active area

W 191.9 : Width of active area

Unit : mm

Tolerance: ± 10 %

The following formula defines the luminance distribution:

$$\Delta L_{DIS} = \left(1 - \frac{L_{MIN}}{L_{MAX}}\right) \times 100\ (\%) \quad ③$$

where L_{MAX} is the maximum luminance and L_{MIN} is the minimum luminance taken at the five locations in Fig.1.

SHARP

Note 2) The ratio of the emission area per the display area. SHARP's EL has comparatively high fill factor, and therefore, the visibility of display is excellent.

Note 3) Shadowing characteristics means the variation of luminance according the number of dots lit on a scanning line.

Thanks to the addition of the shadowing compensation circuit, the display quality of SHARP's EL is improved.

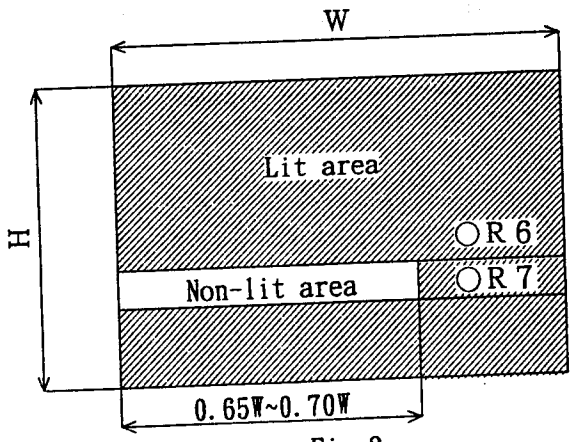

Fig. 2

The following formula defines the shadowing characteristics:

$$\Delta L_{SD} = \left(\frac{L_N}{L_L} - 1\right) \times 100\ (\%)$$

where L_L is the luminance at R_6, L_N at R_7.

SHARP

7. Timing Characteristics

7-1 Input signals

This unit is driven by line-at-a-time scanning method with the following four input signals fed at LS TTL level:

Parameter	Symbol	Description
Data transfer clock	CK_D	The signal controls sampling and transferring data signal.
Data signal	D_{IN}	The signal are sampled at every rising edge of data transfer clock and are transferred in the direction of sequential row from the right end to left end. The display is on while the logic is "H" and off while the logic is "L".
Horizontal sync. signal	$\overline{H.D}$	The signal controls the timing of line-at-a-time scanning. The display data remain in effect while the logic is "H" and blanking while the logic is "L".
Vertical sync. signal	$\overline{V.D}$	The signal controls frame frequency. Typ. 60 Hz Frame starts when the logic rises to "H" from "L".

SHARP

7 – 2 Input signals timing characteristics ⚠4

(Ta=25 ℃)

Parameter	symbol	Min.	Typ.	Max.	unit
Clock frequency	$1/Tc_L$	7.7	–	16	MHz
Clock duty Note 1)	$T_{CL}(H)/T_{CL}$ x100	45	–	55	%
Horizontal sync. signal cycle time	T_H	60	–	69	μs
Horizontal sync. signal blanking time	t_{HB}	2	–	–	μs
Vertical sync. signal blanking time	t_{VB}	1	–	N x T_H	μs
Vertical sync.signal valid time Note 2)	t_{VA}	256xT_H	–	–	μs
Frame Frequency	$1/T_V$	55	60	62	Hz
Data signal delay time required	t_{DD}	0.01	–	T_{CL}	μs
Horizontal sync. signal delay time required	t_{HD}	0.01	–	$T_{CL}/2$	μs
Vertical sync. signal rise wait time	t_{VR}	4x60	–	–	μs
Vertical sync. rise timing	t_{VH}	60	–	$T_H-t_{HB}+50$	μs

Note 1)

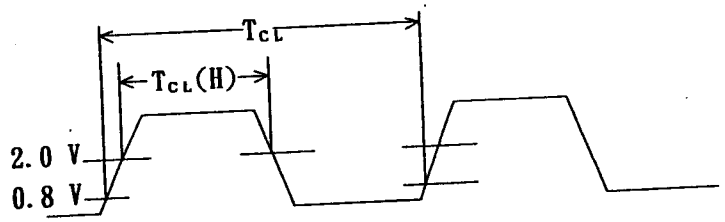

Note 2) The condition of $t_{VA} \geq 256 \times T_H$ shall be strictly obeyed. Negligent of this condition can cause troubles of the unit even if the other conditions listed above are followed.

Note 3) Keep the Valid time of display data (t_{HH}) to $512 \times T_{CL}$

8. Timing Chart

Interface Timing and Display Drive Timing ④

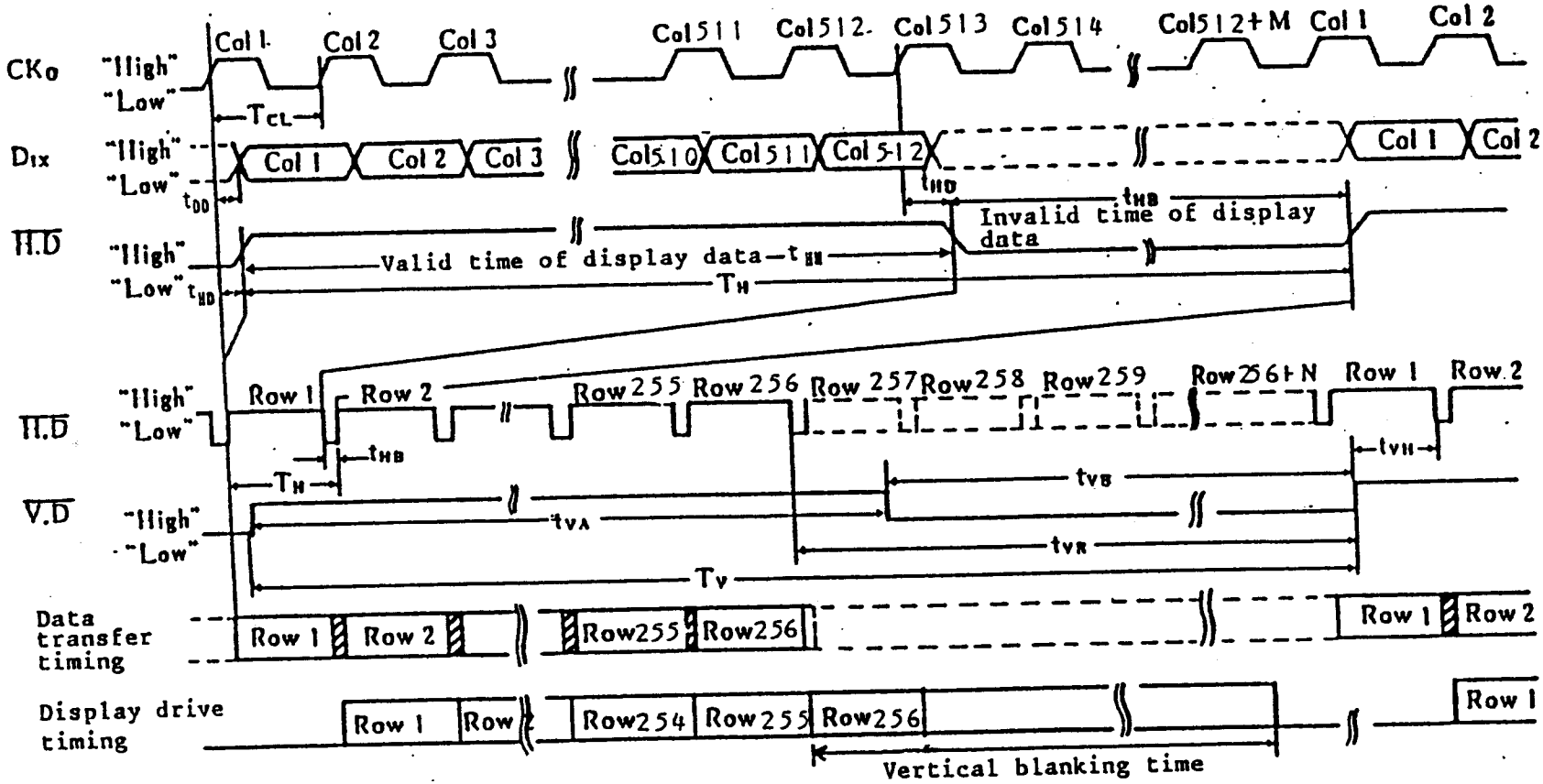

Note 1) Logic level is not necessary to be specified in dotted line portion.

Note 2) $t_{HB} \geqq 2$ μs shall be kept. ($t_{HB} = M \times T_{CL}$)

Note 3) $N \geqq 4$ shall be kept.

SHARP

9. Interface signal and power Supply Connectors

Terminal No.	Signal name	Terminal No.	Signal name
A − 1	Data signal (D_{IN})	B − 1	N.C
A − 2	Data transfer clock (CK_D)	B − 2	GND
A − 3	Horizontal sync. signal ($\overline{H.D}$)	B − 3	GND
A − 4	Vertical sync. signal ($\overline{V.D}$)	B − 4	N.C
A − 5	GND	B − 5	GND
A − 6	N.C	B − 6	N.C
A − 7	V_L (+5 V)	B − 7	V_L (+5 V)
A − 8	V_D (+15 V)	B − 8	V_D (+15 V)

Unit-side pin header
(16-pin board)

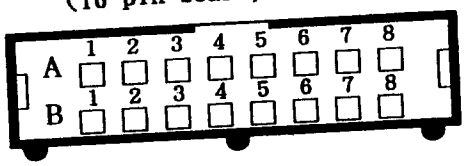

Fitting socket
(16-pin solderless type, it's not included in the unit.)

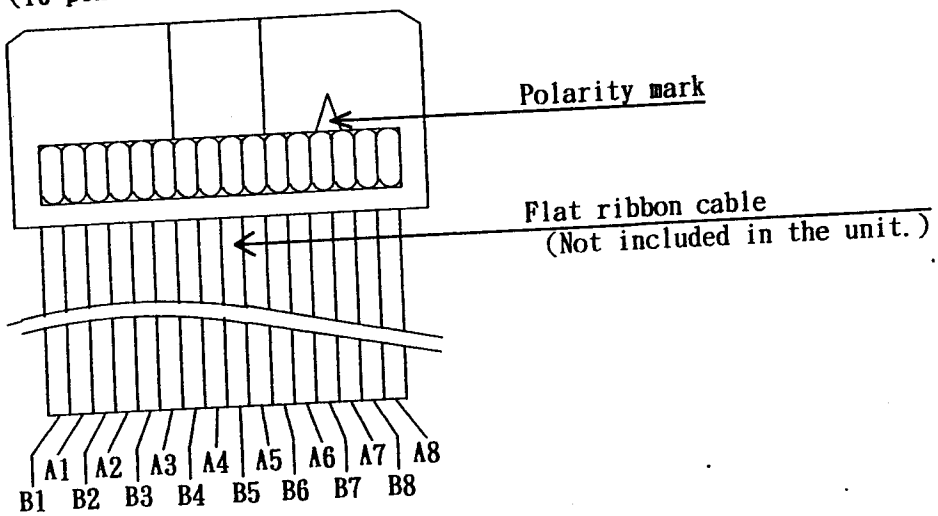

SHARP

Conenectors

	Model No.	Maker
Unit-side pin header	HIF3FC-16PA-2.54DS or equivalents	HIROSE ELECTRIC CO.
Fitting socket	HIF3BA-16D-2.54R or equivalents	- ditto -

Note 1) The length of the cable shall not exceed 50 cm.

Note 2) This unit is not supplied with the socket and the cable.

SHARP

10. Functional Block Diagram

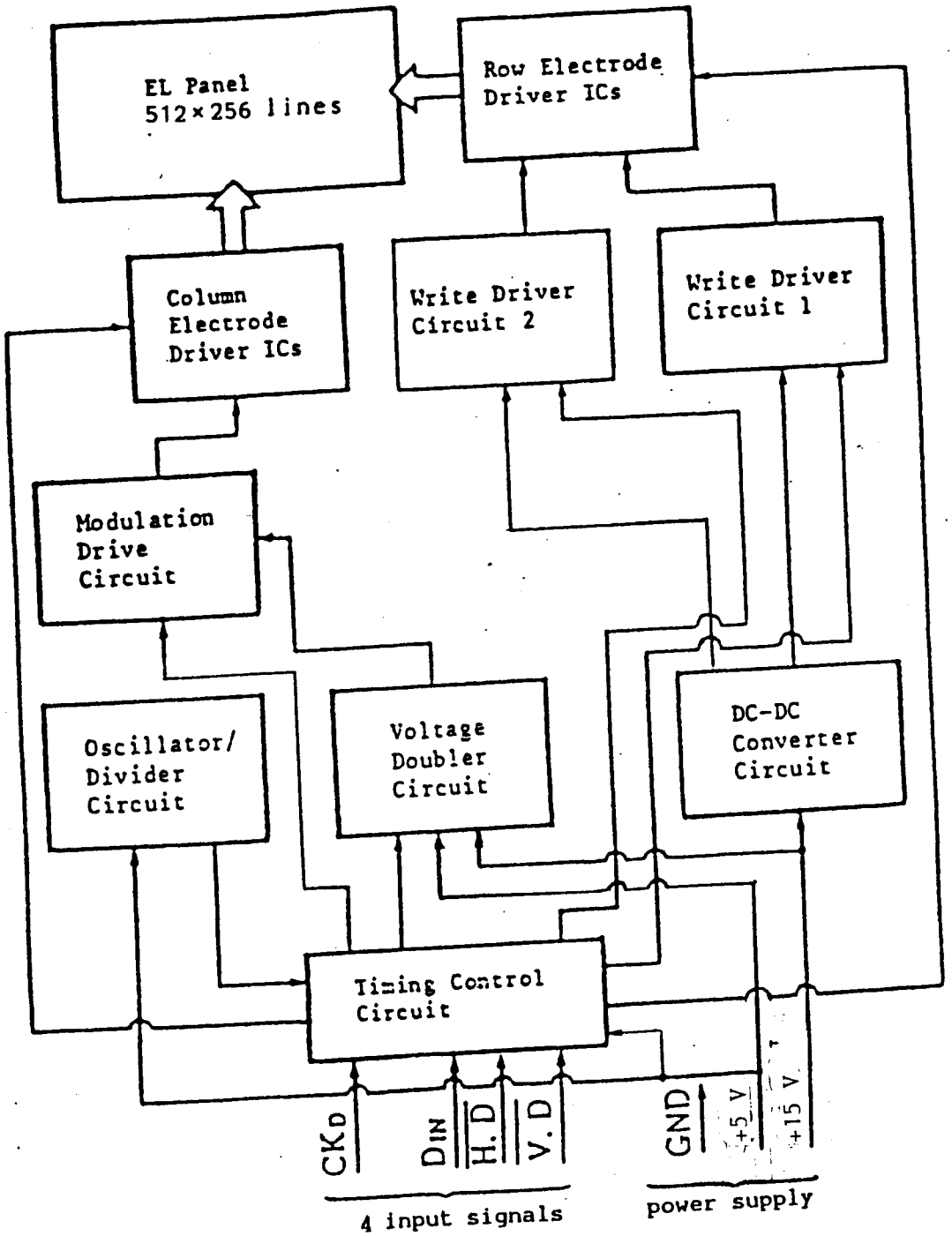

SHARP

Outline Dimensions (unit: mm) ⚠

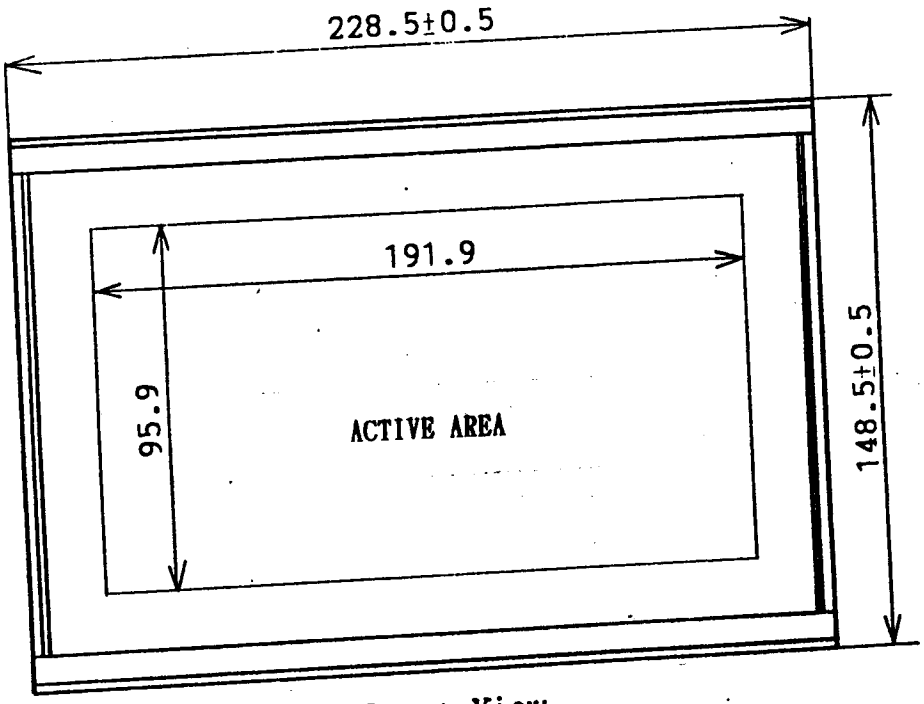

Front View

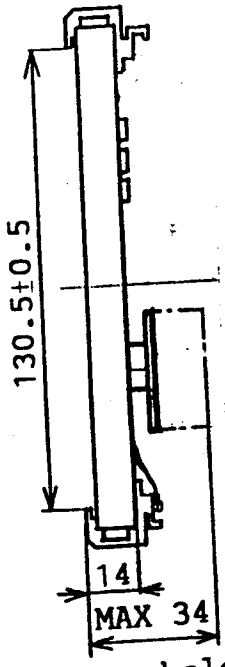

Mounting holes
4-M3x2 (MAX3.5)

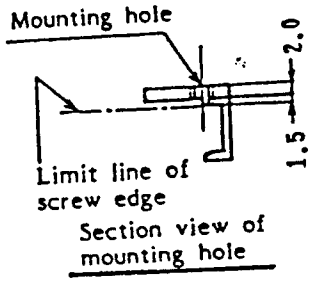

Section view of mounting hole

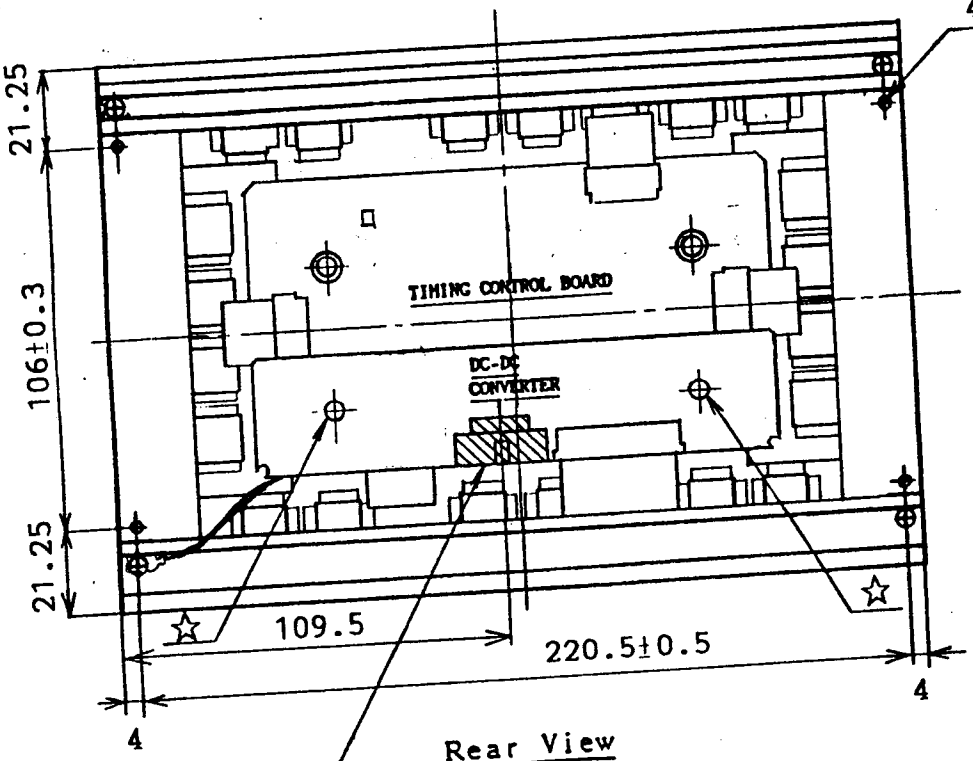

Rear View

Input connector

SHARP

And, if you want the unit to be thinner, take off two screws indicated by ☆ in the figure in P.11, and you can divide the DC-DC converter board from the unit. In this case, the outline of the unit configuration is drawn below.

(Cautions)

1. Be careful against the ESD when you take off the DC-DC converter.
2. The DC-DC converter outputs +250 VDC and -200 VDC. Pay attention this when you build it in your system.
3. Length allowance of the FFC connecting the DC-DC converter board to the timing control board is up to 150 mm. Use the FFC listing below or equivalents.

Sumicard ® SMCD-26xL-ADx10-P1.25-S6.0 (L ≦ 150 mm)
UL No.2737 Ratings 80 ℃ / 300 V
Maker SUMITOMO ELECTRIC INDUSTRIES

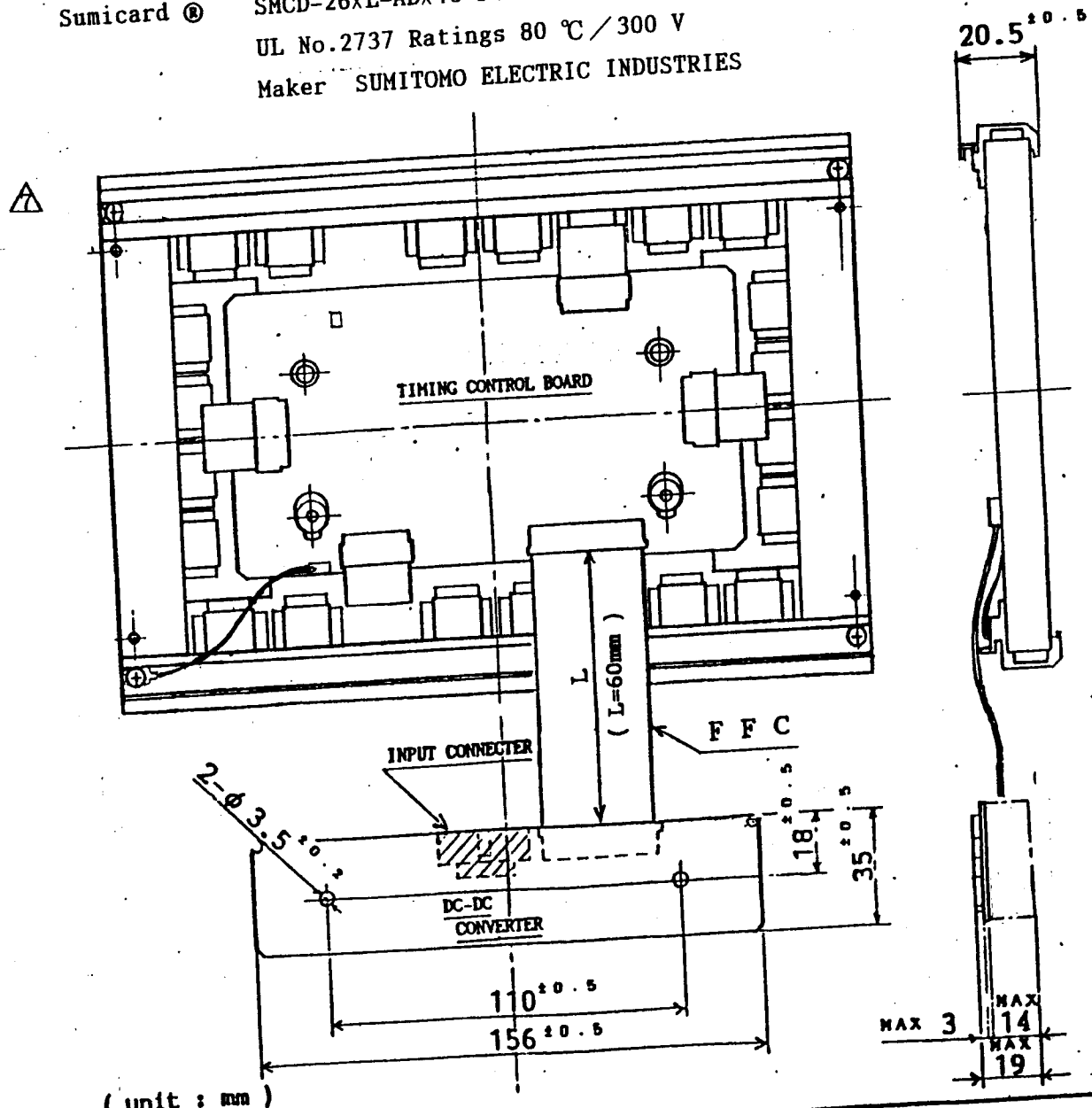

(unit : mm)

SHARP

12. Handling Instructions and Cautions for Operation

Handling Instructions

1. Mounting of the unit on your product shall be done by using the grooves and the mounting tabs of the unit.
2. Since the EL panel is made of glass, care shall be taken to avoid the breakage caused by dropping or bumping it.
3. The display control board or the frame of the unit shall not be removed nor the unit shall be disassembled. ICs mounted on the unit shall never be touched by finger/hands to prevent the breakage due to static electricity.

Cautions for Operation

1. The unit shall be operated within the rated operating conditions specified in this literature.
   When you mount the unit on your product, design your product making the unit breathable.
2. Operation of the unit at high temperature with high humidity shall be strictly avoided.
   Dew on the connector or on the circuits will cause malfunction, which can lead damage to the unit.
3. Cable for the interface and power supplies shall be flat ribbon cable of 16 wires of 1.27 mm pitch (conductor AWG #28) or it's equivalent.
4. The display control board on the rear side of the unit shall never be touched while in operation. It generates AC pulse of approx. 200 V.
5. ⚠6 To avoid the image retention caused by the luminance change due to time lapse, and to increase the panel life, please pay attention to the design of display, so that a fixed pattern may not be displayed as possible as you can, and by using all parts of the viewing area evenly.
   Also, we would recommend to use the unit at the ambient temperature as low as you can because the temperature is one of the causes of acceleration of the luminance change due to time lapse.

Others

If any problem should arise from this specification, the supplier and user should work out a mutually acceptable solution.

SHARP

12. Circuit scheme of the signal input block ⚠8

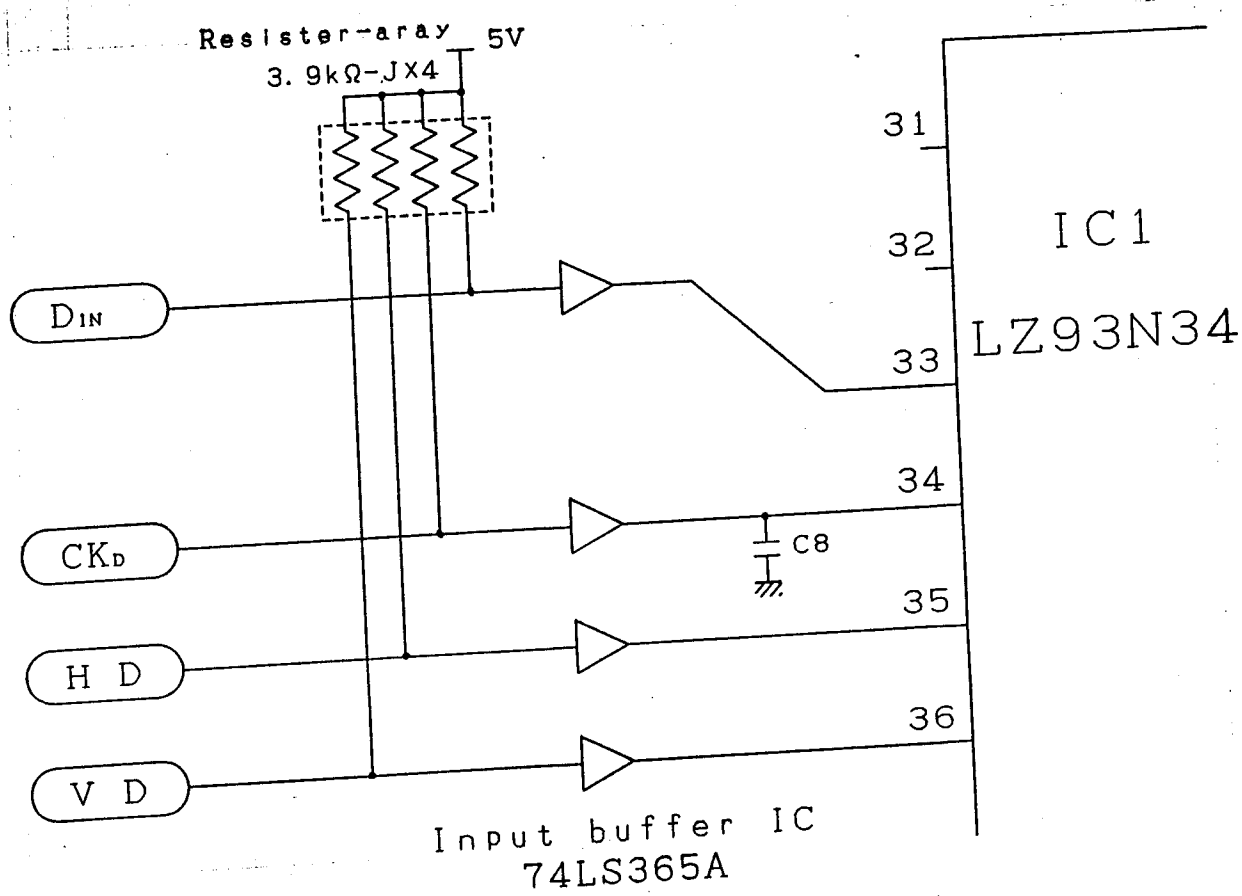

SHARP

14. Power supply input circuit

(a) Over current protection

This unit equips fuses in power supply input circuit protecting fire accident rising from over current in internal circuit, so the fuse may melt down when the specifications are not kept or in case of short circuit.

Fuse specifications ⚠9

Parts No.	Model No.	Ratings	Melt type	Anthorizaition Standerd
F 1	TR-5 19374 *	800 mA	slow	UL.CSA
F 3	TR-5 19374 *	1.25 A	slow	UL.CSA

Maker : Wickman

*: or equivalents

(b) Take account of the scheme below for 5 VDC input rising up time and falling down time of 5 VDC

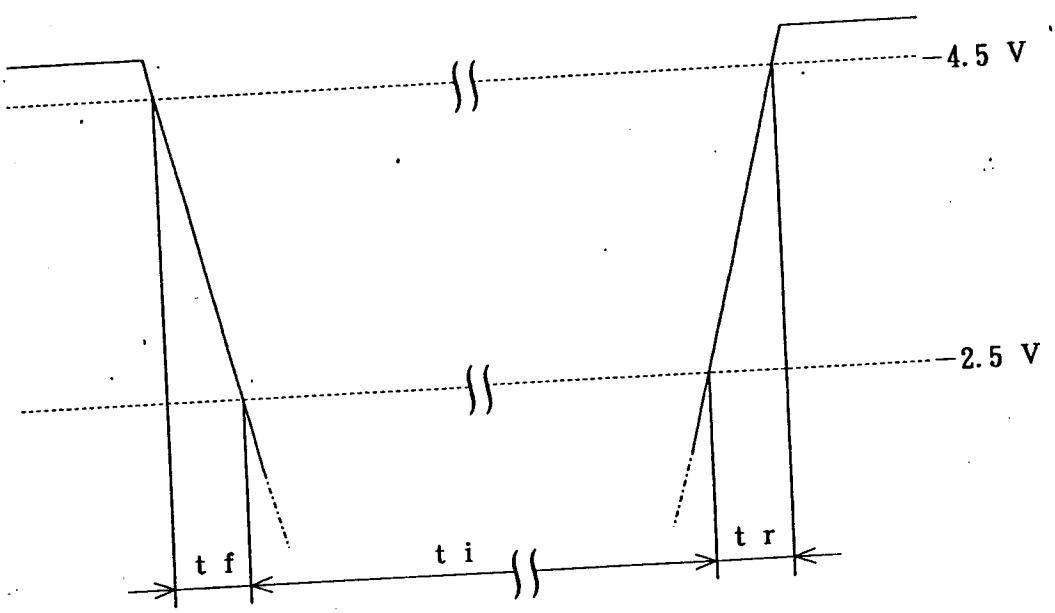

tf = falling down time tr = rising up time

(1) tf, tr ≦ 100 ms is better to be kept.

(2) ti ≧ 1 ms shall be kept.

SHARP

14. Packing Specification

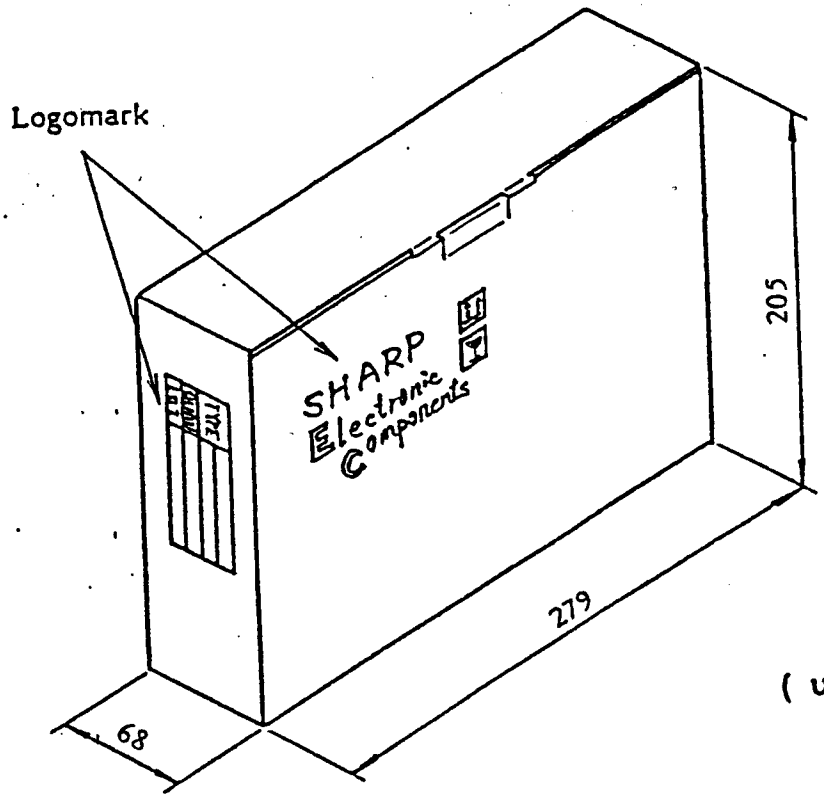

(unit : mm)

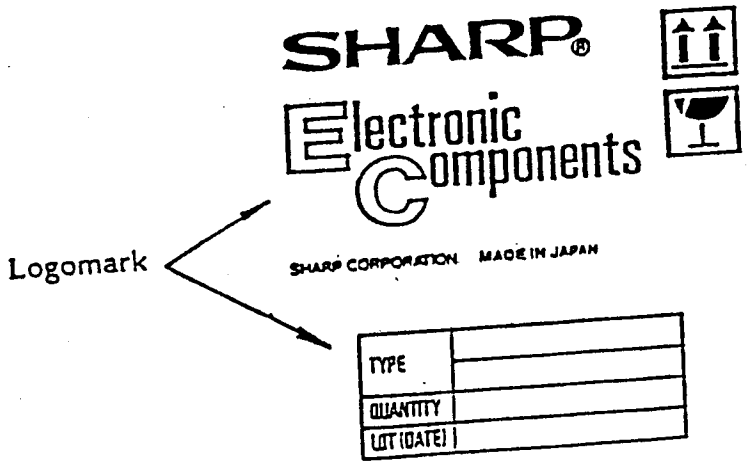

SHARP

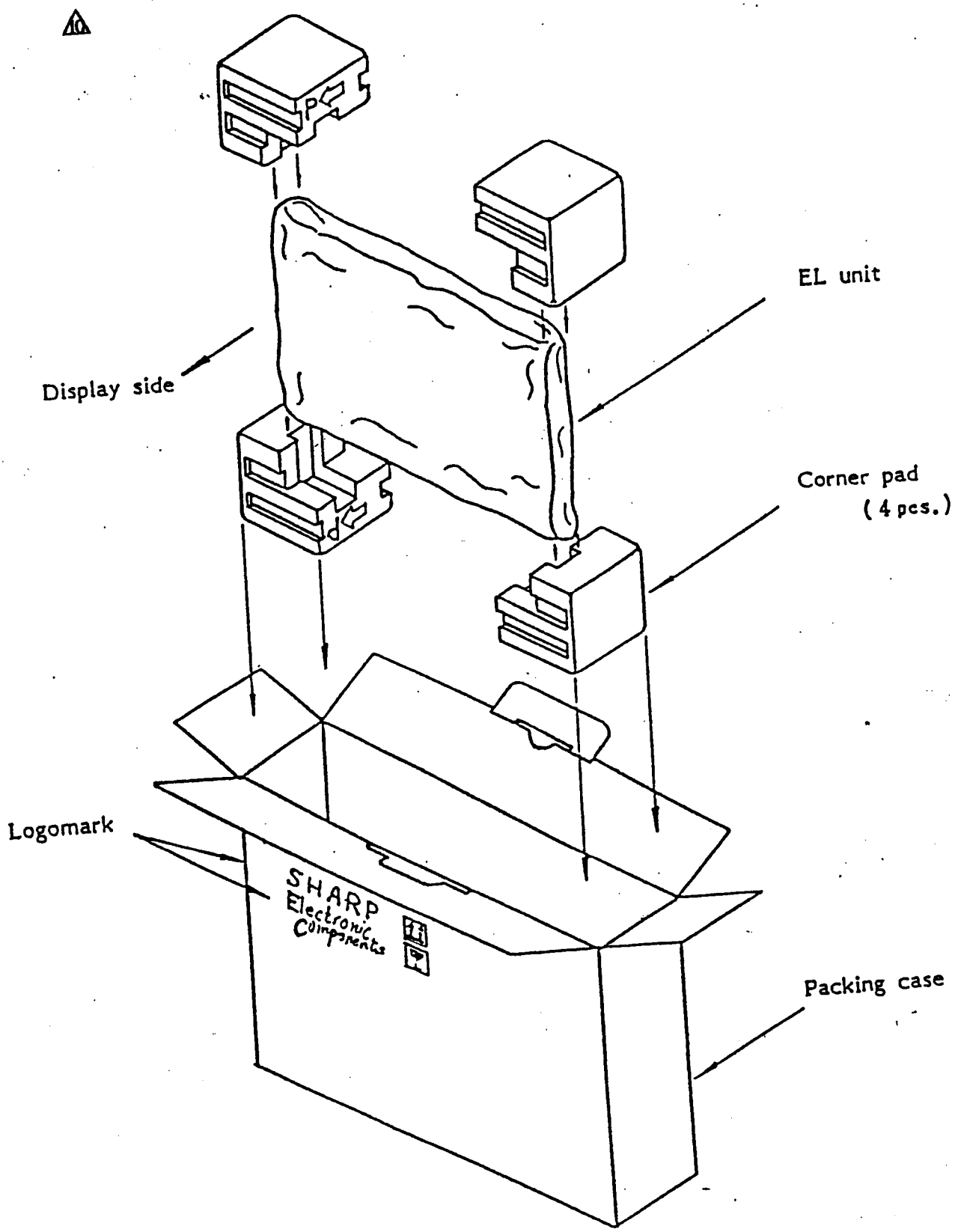
EL unit
Display side
Corner pad
(4 pcs.)
Logomark
SHARP
Electronic
Components
Packing case