LED / ANALOG VU METER

3-1-16

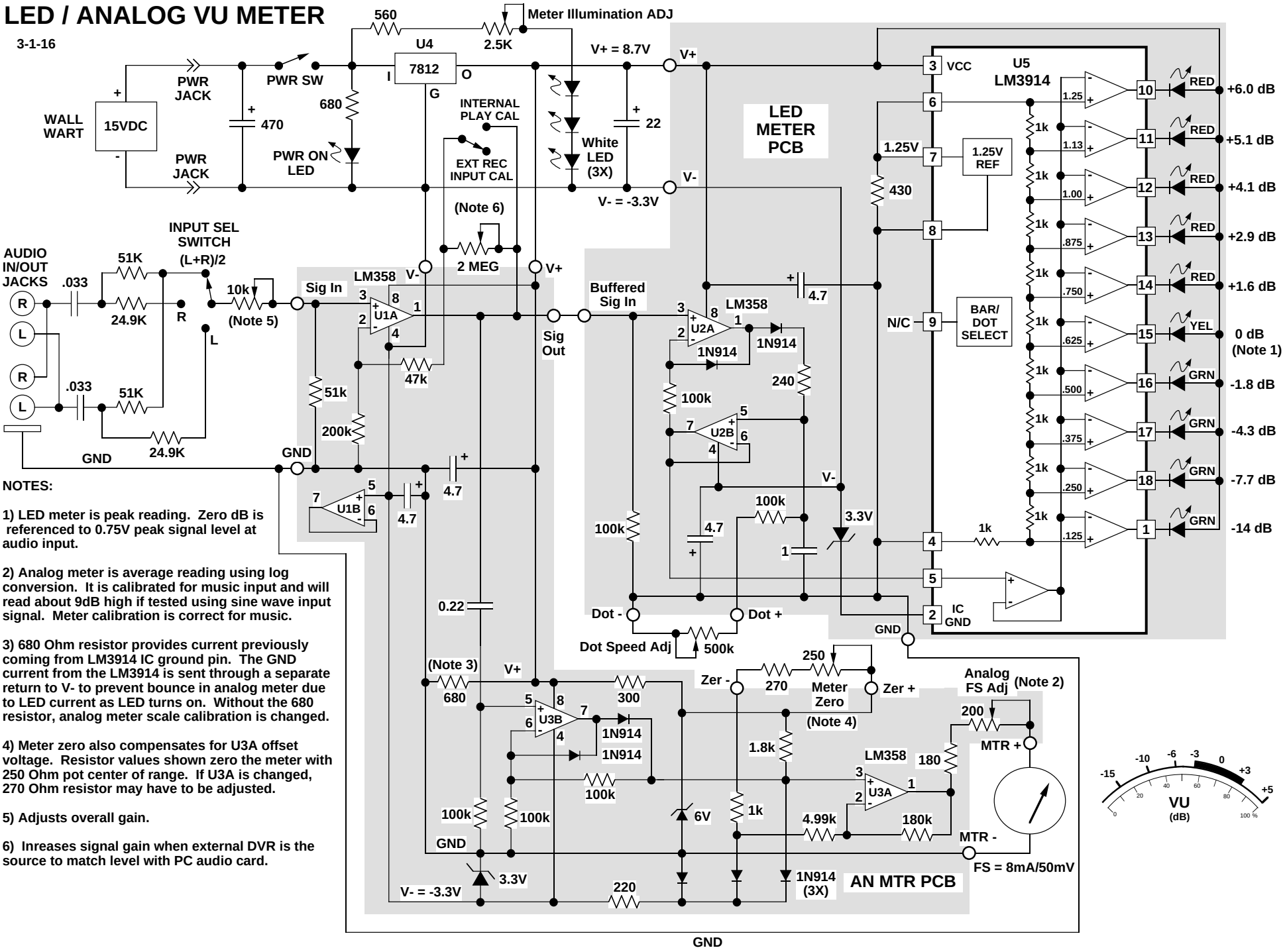

NOTES:

1) LED meter is peak reading. Zero dB is referenced to 0.75V peak signal level at audio input.

2) Analog meter is average reading using log conversion. It is calibrated for music input and will read about 9dB high if tested using sine wave input signal. Meter calibration is correct for music.

3) 680 Ohm resistor provides current previously coming from LM3914 IC ground pin. The GND current from the LM3914 is sent through a separate return to V- to prevent bounce in analog meter due to LED current as LED turns on. Without the 680 resistor, analog meter scale calibration is changed.

4) Meter zero also compensates for U3A offset voltage. Resistor values shown zero the meter with 250 Ohm pot center of range. If U3A is changed, 270 Ohm resistor may have to be adjusted.

5) Adjusts overall gain.

6) Inreases signal gain when external DVR is the source to match level with PC audio card.