Parallel Charge Configuration

The parallel configuration supports two slot stand-alone chargers. Charge pulses are fed alternately to each cell under the control of the CC1 and CC2 pins so the charge regimes occur in parallel. The duty cycle on CC1 and CC2 are independent of one another. Transitions from precharge to fast charge, fast charge to top-off, and top-off to maintenance occur independently for each cell.

The configuration shown in Figure 4 is for charging two cells with the current-sense feedback regulating the charge source to 2A (RSNS = 0.068Ω). The effective charge current for each cell is 2A x 0.484 = 0.968A. A charger with battery holders designed to accept either AA or AAA cell sizes can be constructed with the current-sense resistance split between two separate resistors so each cell type (AA or AAA) is charged at a different rate. Mechanical design of the holders is required to prevent insertion of more than one cell in each slot. The holder design must also prevent electrical contact with reverse polarity insertion.

Figure 4. Parallel Configuration with External Current Regulation

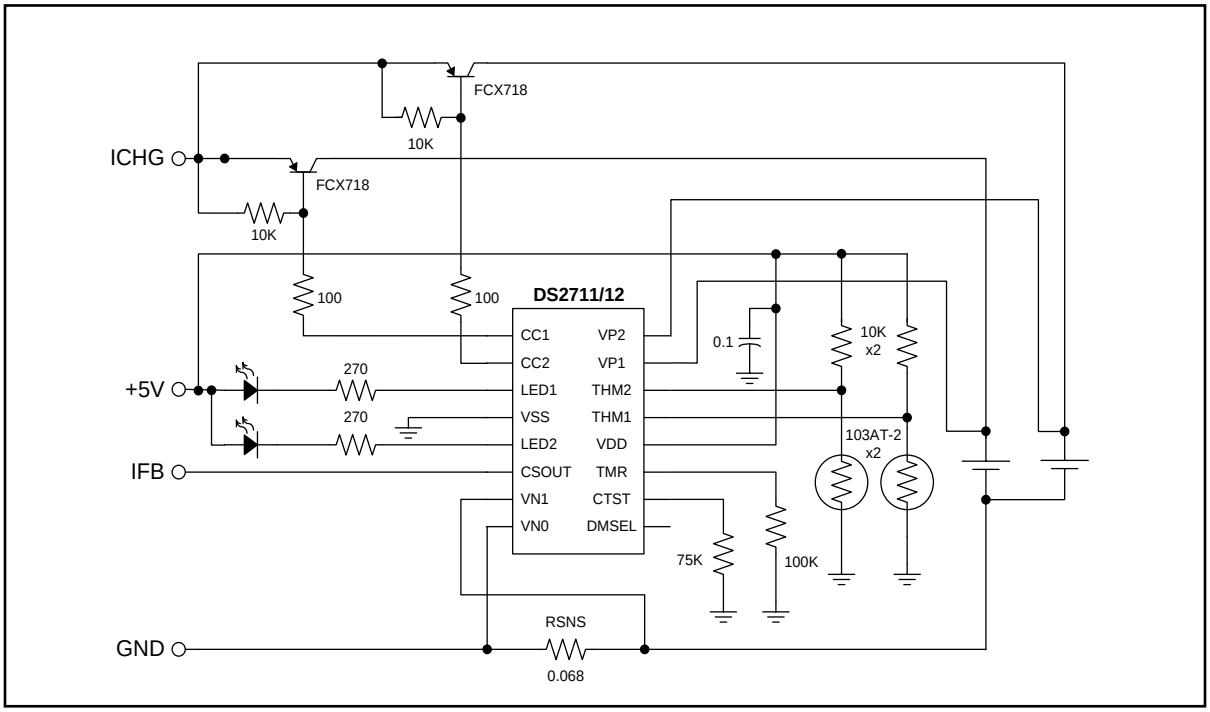

The series or parallel charge configuration is programmed by strapping LED2 in the low, high, or high-Z state during power-up. In this example and the following one, the parallel charge mode is selected by pulling LED2 pin high during power-up. This is accomplished in this example by the LED and 270Ω resistor. In applications where only one LED is used, a 100kΩ pullup resistor is recommended. See Table 2 for additional configuration programming information.