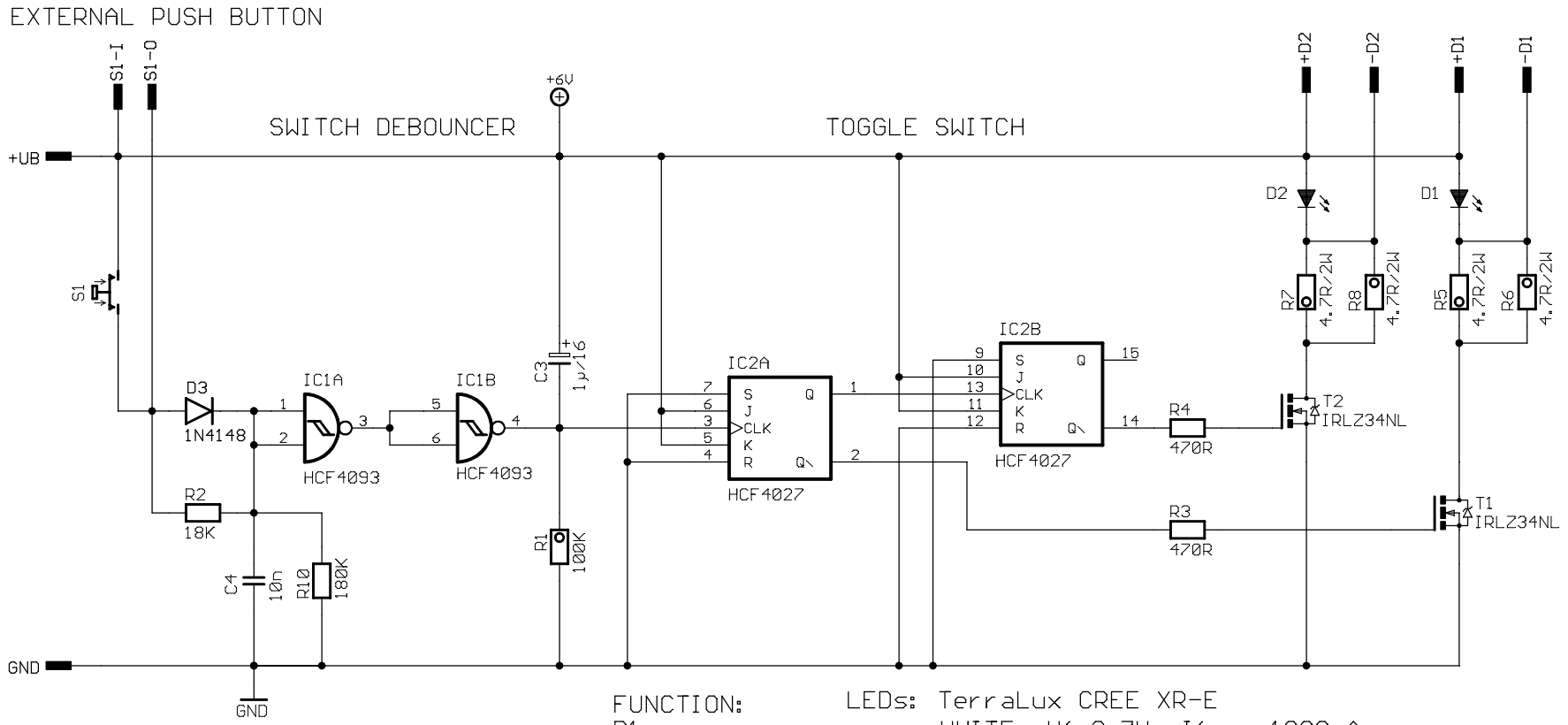

FUNCTION:
D1
D2
D1 + D2
OFF

LEDs: TerraLux CREE XR-E
WHITE, Uf=3.7V, Ifmax=1000mA
R5 through R8 calculated for If=978.72mA

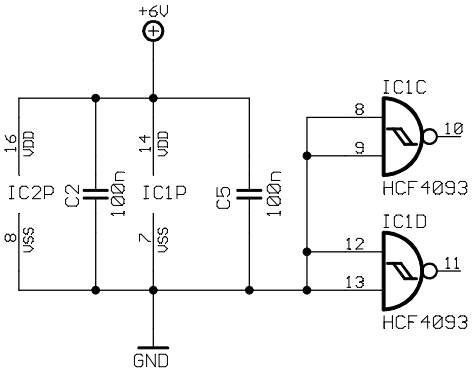

BOARD: SINGLE SIDED (1 WIRE JUMP) BOARD DIMENSIONS: 88X21mm (3.47X0.83inches)	
TITLE: DUO-TOGGLE-SWITCH-I	
Document Number:	REV:
Date: 17.08.2009 09:00:28	Sheet: 1/1