WATERPROOF MINIATURE ROCKER SWITCH

KR Series

Features

- Enclosed switch complying to IP65
- Lighted and non-lighted versions
- Maintained-action and momentary options
- Snap-in mounting
- Mechanical life: 100,000 cycles
- DC electrical life: 25,000 cycles

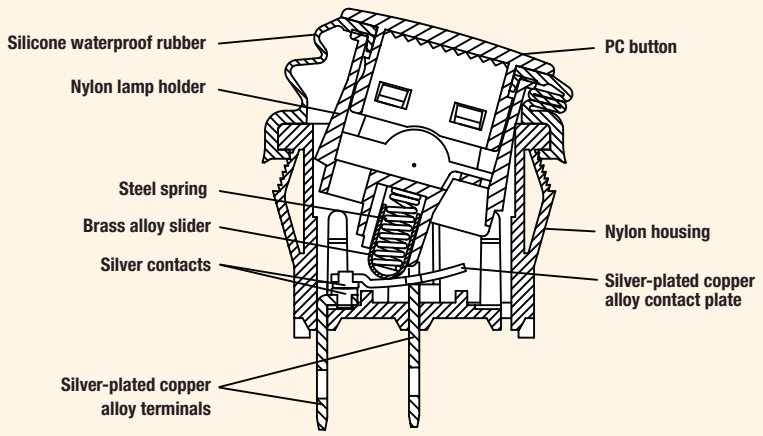

Electrical Ratings

Switch Series	VDC	UL1054 Rating	Electrical Life at Rated Load According to UL (Min. Operations)
KR	20A 14VDC; 10A 28VDC	16A 125VAC 1/3HP; 10A 250VAC 1/2HP	6,000

Specifications

Electrical	
Dielectric Strength:	1500VAC for 1 minute
Insulation Resistance:	10^8 ohms min at 500VDC
Initial Contact Resistance:	0.050 ohms max
Temperature Rating:	-25°C to +85°C

Materials	
Actuator (non-lighted):	Nylon 66 94V-2 min.
Actuator (lighted):	Polycarbonate
Housing:	Nylon 66 94V-2 min.
Spring:	Steel Wire
Contacts:	Silver Alloy
Movable Arm:	Silver
Terminals:	Silver-plated Copper Alloy
Waterproof Rubber:	Silicone

Dimensions inches (mm)

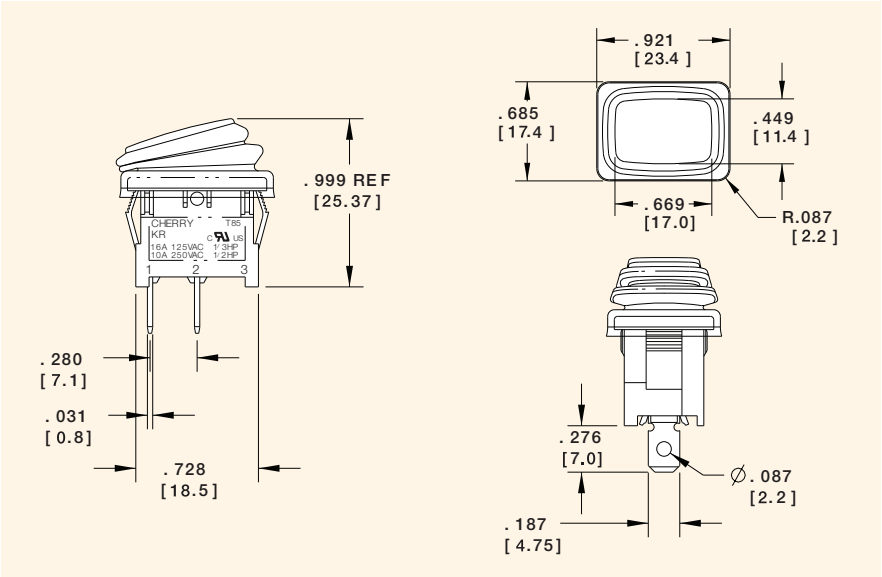

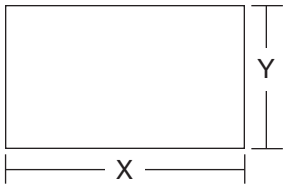

Z = Panel Thickness

Recommended Panel Cut-Out Dimensions
inches (mm)

Dim. Z	Dim. X	Dim. Y
0.030 to 0.059 (0.75 to 1.50)	0.764 (19.40)	0.512 (13.00)
0.059 to 0.098 (1.50 to 2.50)	0.780 (19.80)	0.512 (13.00)

Examples of Common Part Numbers and Descriptions inches (mm)

Part Number	Circuitry	Switch Function	Terminal Type	Actuator/ Housing Color	Legend Marking
KRE2ANA1BBD		On – Off	0.187 (4.75) Quick Connect	Black/Black	
KRE2ALA2RBB		On – Off (Illuminated)	0.187 (4.8) Quick Connect	Red/Black	
KRE2BNA1BBB		On – On	0.187 (4.8) Quick Connect	Black/Black	
KRE2DNA1BBB		(On) – Off	0.187 (4.8) Quick Connect	Black/Black	

Ordering Information

KR — Series

E — Contact Rating

Code	Contact Rating
E	16A, 125VAC, 1/3HP (cUL) 10A, 250VAC; 1/2HP (cUL) 20A 14VDC 10A 28VDC

2 — Circuitry

Code	Circuitry
2	Single-Pole

A — Switch Function

Code	Switch Function
A	On – Off
B	On – On*
D	(On) – Off

N — Non-Lighted/Lighted

Code	Non-Lighted/Lighted
N	Non-Lighted
L	110V Neon Bulb
E	220V Neon Bulb

A — Terminal Type

Code	Terminal Type
A	0.187 (4.75) Quick Connect

1 — Actuator Type

Code	Actuator Type
1	Non-Lighted
2	Lighted

B — Actuator Color

Code	Actuator Color
A	Amber
B	Black
G	Green
R	Red

B — Housing Color

Code	Housing Color
B	Black

B — Actuator Marking

Code	Actuator Marking
B	Blank
C	•
D	O –
E	O I
F	I II
G	– =
J	ON OFF

*Only available as non-lighted

©2009 Cherry Corporation