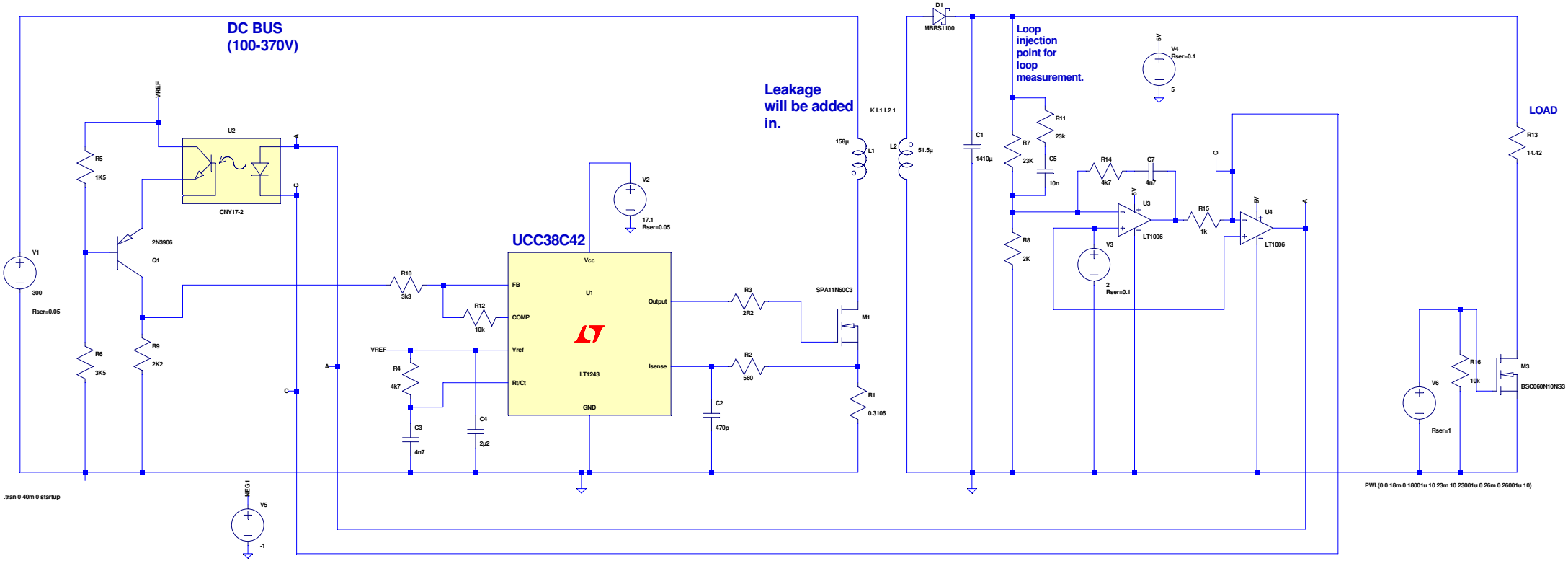

--- C:\Users\Andrew\Desktop\FORUM\CASCODE\FLYB 373V V1 PNP.asc ---