SEPIC LED DRIVER WITH V(IN) = 3 NiMH AA CELLS IN SERIES.

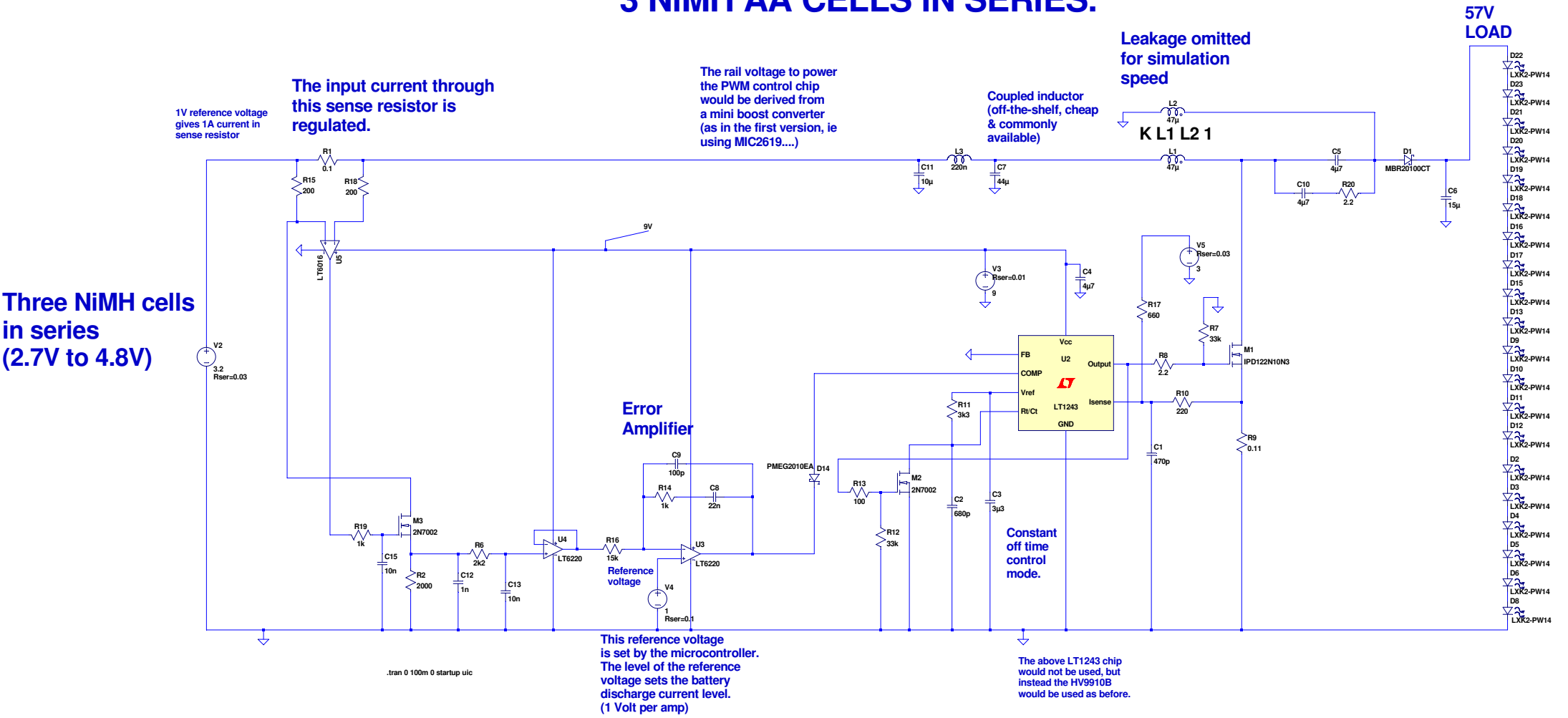

--- C:\forum\LT6016\3 cell emergency led driver_LT6016.ASC ---