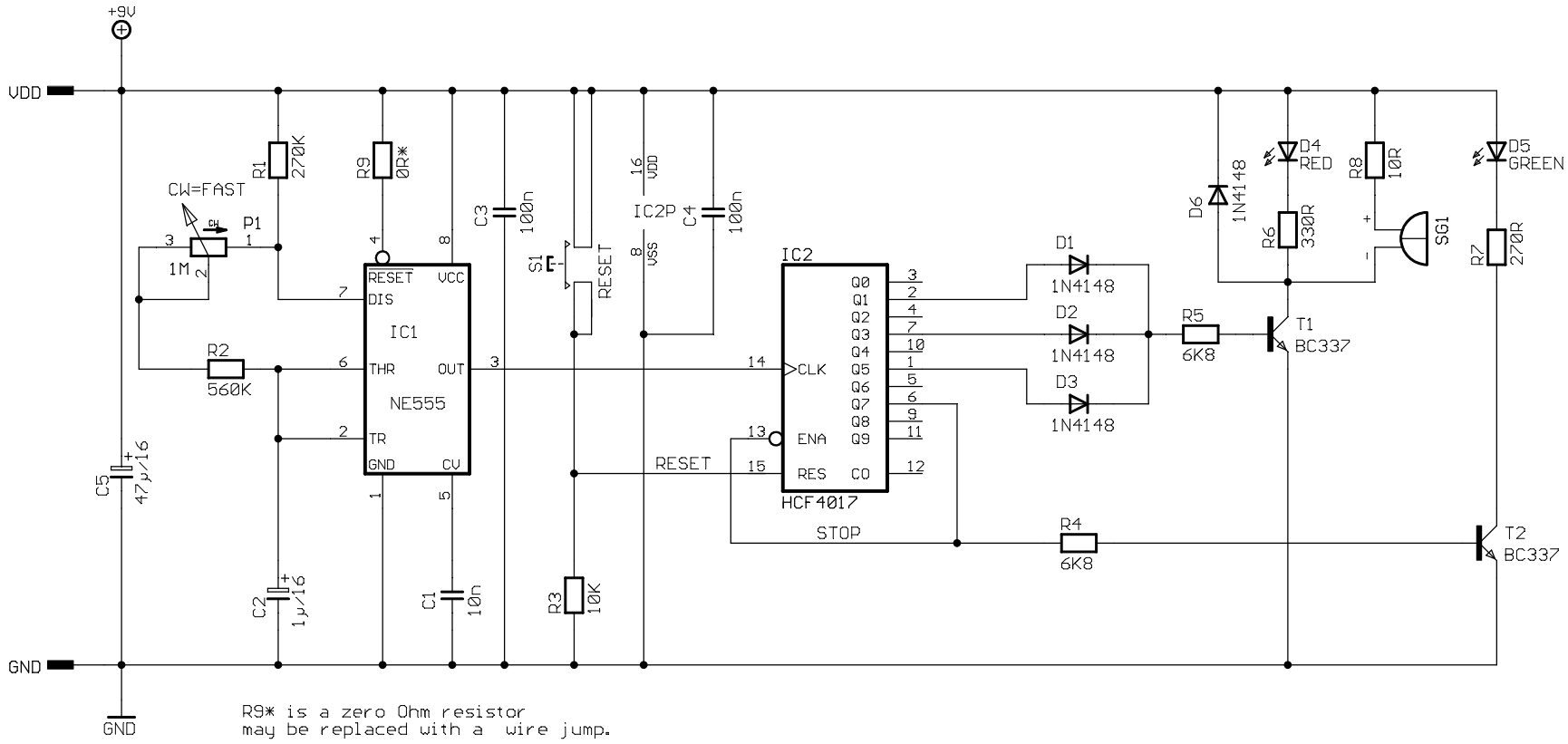

BOARD:SINGLE SIDED DIMENSIONS: 79.6925X45.0250mm (3.1375X1.7750'')	
TITLE: TOY-E-FENCE	
Document Number:	REV:
Date: 30.09.2009 11:02:16	Sheet: 1/1