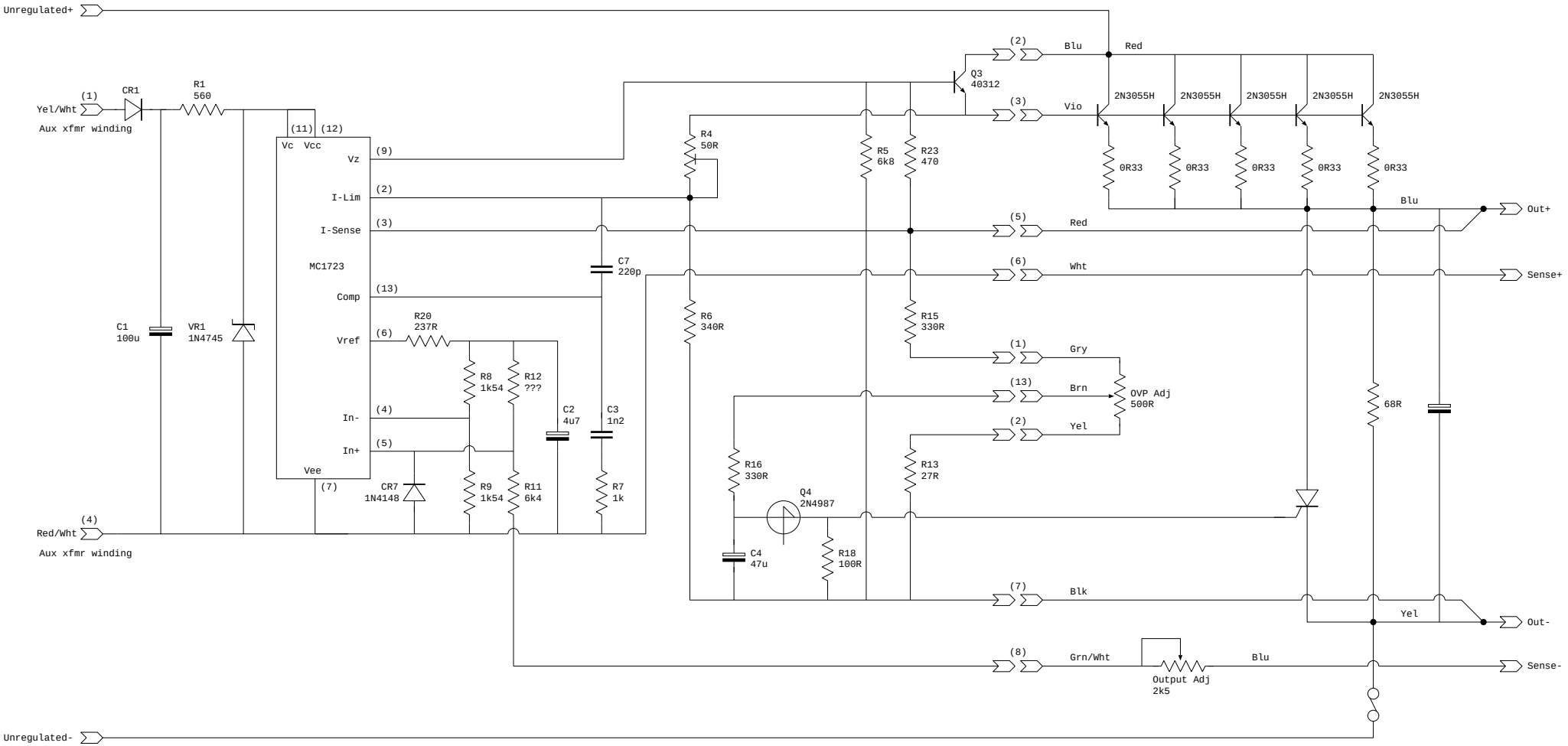Sorensen 12-10.5
Regulated power supply
20/10/2022