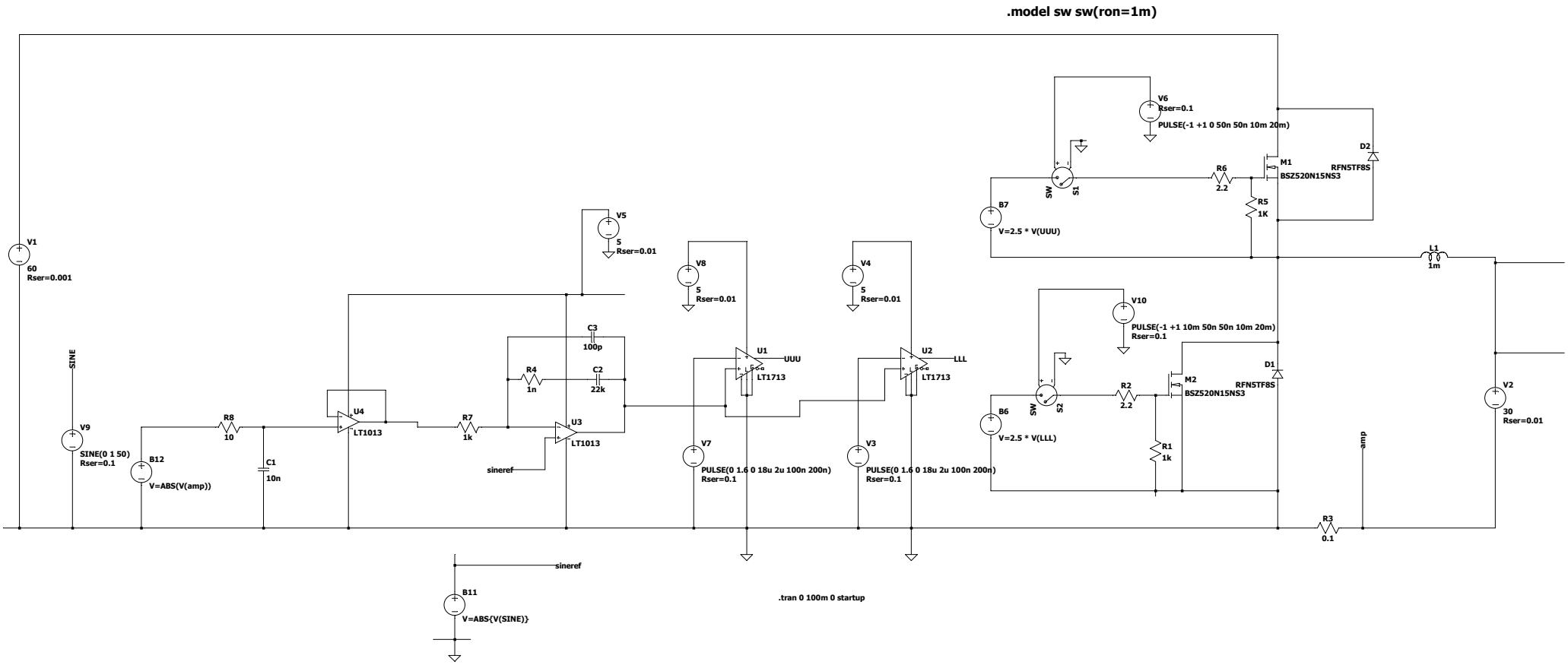

--- C:\LTspice_ZAPPER\LTspice\Sine wave current _16Arms.asc ---