BASIC, 'BRIEF IDEA' SCHEMATIC ONLY

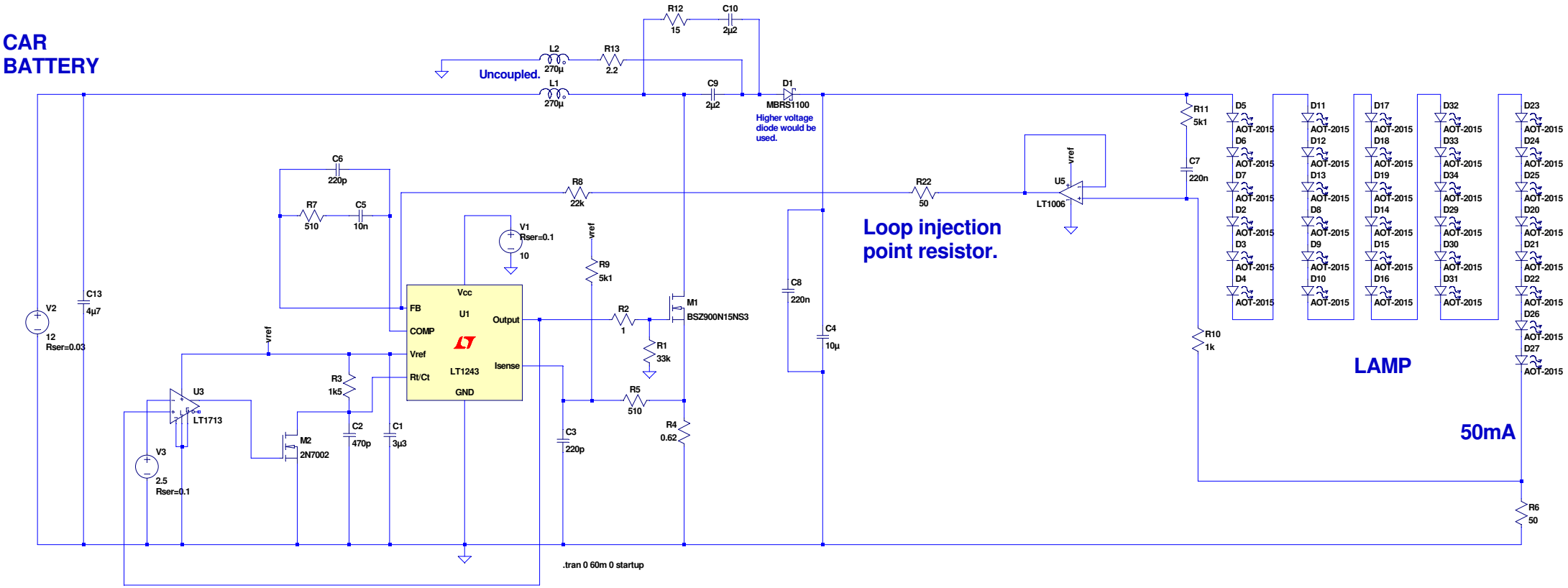

OFF-TIME COMPARATOR

...Basic idea...different controller would be used.

--- C:\LTspice COURSE_3\LED Drivers\High step up ratio\Brief SEPIC idea for long LED string\delete SEPIC LED driver 50mA.asc ---