Circuit to ramp a reference voltage up from, or down to, zero volts

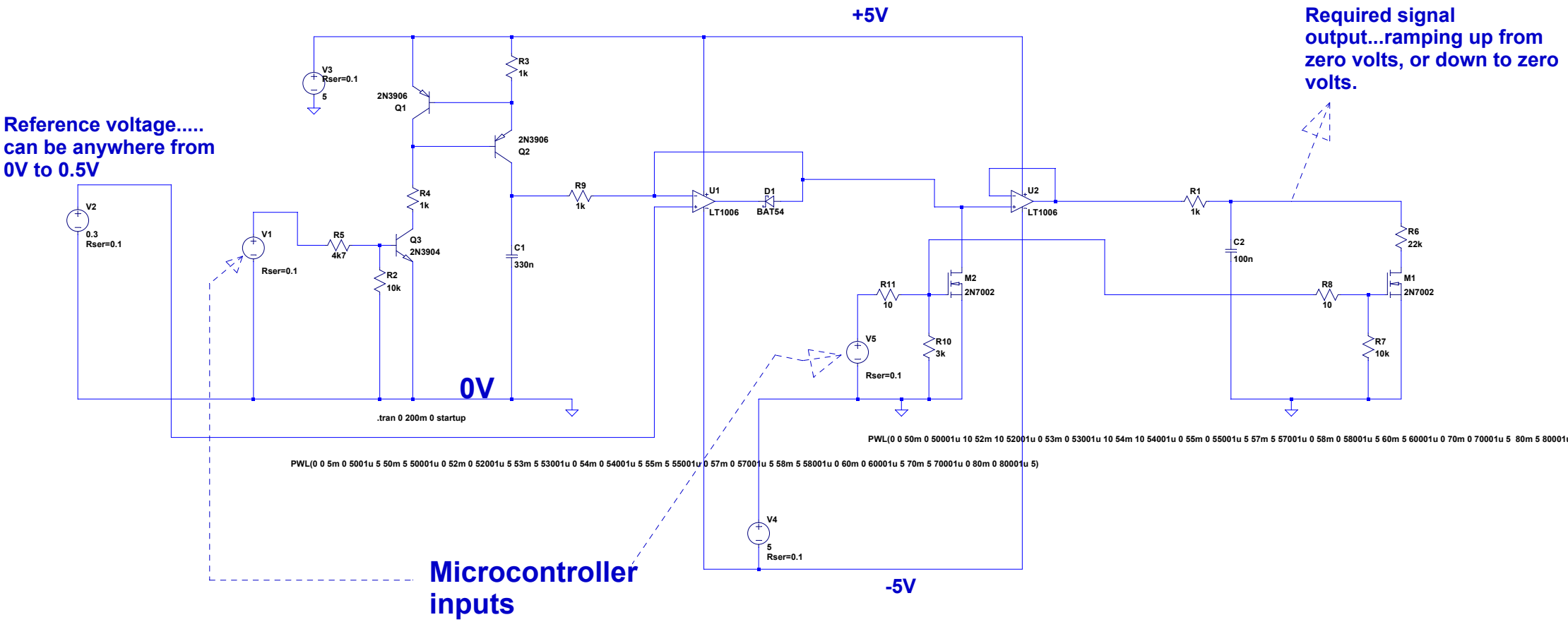

--- C:\Users\Andrew\Documents\SLOPE REF.asc ---