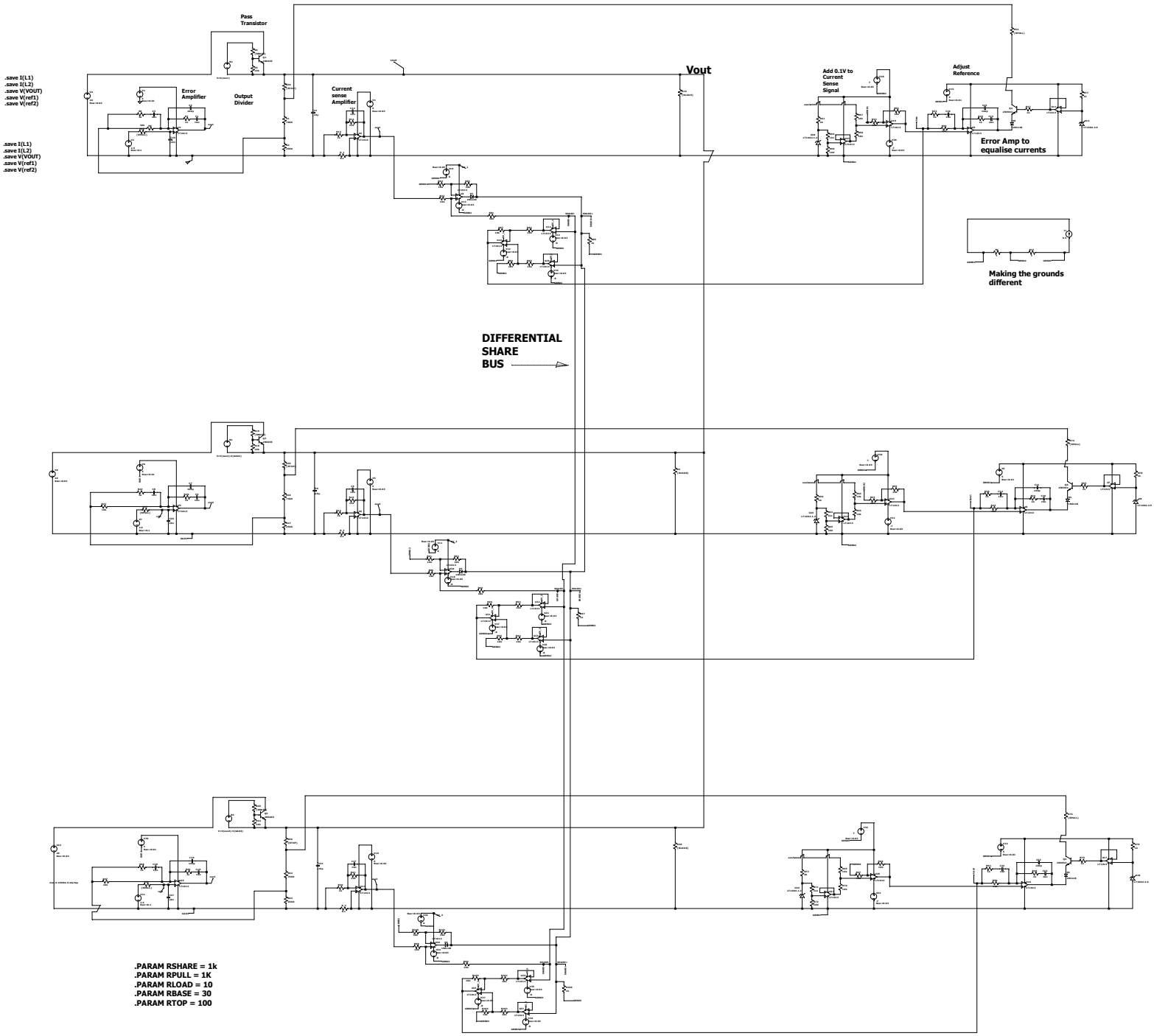3 Paralleled Linear regulators with current balancing by way of Differential "share" bus