Service Manual

NR1601 /N1SG/N1B/U1B

Integrated Amplifier

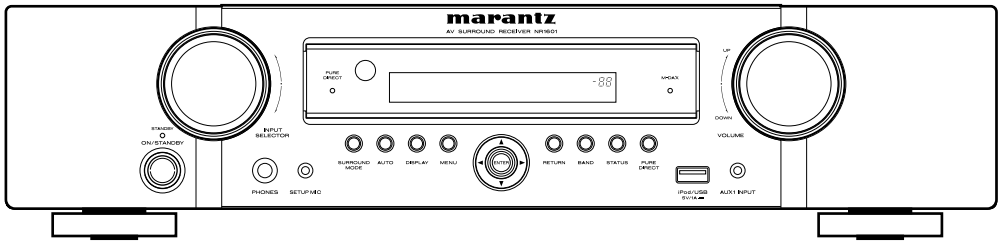

SR5005

- For purposes of improvement, specifications and design are subject to change without notice.
- Please use this service manual with referring to the operating instructions without fail.
- Some illustrations using in this service manual are slightly different from the actual set.

marantz®

NR1601

Ver. 3

Please refer to the MODIFICATION NOTICE.

S0157-1V03DM/DG1010

Copyright 2010 D&M Holdings Inc. All rights reserved.
WARNING: Violators will be prosecuted to the maximum extent possible.

MARANTZ DESIGN AND SERVICE

Using superior design and selected high grade components, **MARANTZ** company has created the ultimate in stereo sound. Only original **MARANTZ** parts can insure that your **MARANTZ** product will continue to perform to the specifications for which it is famous.

Parts for your **MARANTZ** equipment are generally available to our National Marantz Subsidiary or Agent.

ORDERING PARTS :

Parts can be ordered either by mail or by Fax.. In both cases, the correct part number has to be specified.

The following information must be supplied to eliminate delays in processing your order :

1. Complete address
2. Complete part numbers and quantities required
3. Description of parts
4. Model number for which part is required
5. Way of shipment
6. Signature : any order form or Fax. must be signed, otherwise such part order will be considered as null and void.

USA

MARANTZ AMERICA, INC
100 CORPORATE DRIVE
MAHWAH, NEW JERSEY 07430
USA

EUROPE / TRADING

D&M EUROPE B. V.
P. O. BOX 8744, BUILDING SILVERPOINT
BEEMDSTRAAT 11, 5653 MA EINDHOVEN
THE NETHERLANDS
PHONE : +31 - 40 - 2507844
FAX : +31 - 40 - 2507860

CANADA

D&M Canada Inc.
5-505 APPLE CREEK BLVD.
MARKHAM, ONTARIO L3R 5B1
CANADA
PHONE : 905 - 415 - 9292
FAX : 905 - 475 - 4159

JAPAN

D&M Holdings Inc.
D&M BUILDING, 2-1 NISSHIN-CHO,
KAWASAKI-KU, KAWASAKI-SHI,
KANAGAWA, 210-8569 JAPAN

株式会社 ディーアンドエムホールディングス

本　社　〒210-8569
神奈川県川崎市川崎区日進町2-1 D&Mビル

KOREA

D&M SALES AND MARKETING KOREA LTD.
2F,YEON BLDG.,
88-5, BANPO-DONG, SEOCHO-GU,
SEOUL KOREA
PHONE : +82 - 2 - 715 - 9041
FAX : +82 - 2 - 715 - 9040

CHINA

D&M SALES AND MARKETING SHANGHAI LTD.
ROOM.808 SHANGHAI AIRPORT CITY TERMINAL
NO.1600 NANJING (WEST) ROAD, SHANGHAI,
CHINA. 200040
TEL : 021 - 6248 - 5151
FAX : 021 - 6248 - 4434

NOTE ON SAFETY :

Symbol ⚠ Fire or electrical shock hazard. Only original parts should be used to replaced any part marked with symbol ⚠.

Any other component substitution (other than original type), may increase risk of fire or electrical shock hazard.

安全上の注意：

⚠がついている部品は、安全上重要な部品です。必ず指定されている部品番号の部品を使用して下さい。

SHOCK, FIRE HAZARD SERVICE TEST :

CAUTION : After servicing this appliance and prior to returning to customer, measure the resistance between either primary AC cord connector pins (with unit NOT connected to AC mains and its Power switch ON), and the face or Front Panel of product and controls and chassis bottom.

Any resistance measurement less than 1 Megohms should cause unit to be repaired or corrected before AC power is applied, and verified before it is return to the user/customer.

Ref. UL Standard No. 60065.

In case of difficulties, do not hesitate to contact the Technical Department at above mentioned address.

091105DM/DG

SAFETY PRECAUTIONS

The following check should be performed for the continued protection of the customer and service technician.

LEAKAGE CURRENT CHECK

Before returning the unit to the customer, make sure you make either (1) a leakage current check or (2) a line to chassis resistance check. if the leakage current exceeds 0.5 milliamps, or if the resistance from chassis to either side of the power cord is less than 460 kohms, the unit is defective.
Be sure to test for leakage current with the AC plug in both polarities, in addition, in each power ON, OFF and STANDBY mode, if applicable.

CAUTION Please heed the points listed below during servicing and inspection.

◎ Heed the cautions!

Spots requiring particular attention when servicing, such as the cabinet, parts, chassis,etc., have cautions indicated on labels. be sure to heed these causions and the cautions indicated in the handling instructions.

◎ Caution concerning electric shock!

(1) An AC voltage is impressed on this set, so touching internal metal parts when the set is energized could cause electric shock. Take care to avoid electric shock, by for example using an isolating transformer and gloves when servicing while the set is energized, unplugging the power cord when replacing parts, etc.

(2) Tere are high voltage parts inside. Handle with extra care when the set is energized.

◎ Caution concerning disassembly and assembly!

Through great care is taken when manufacturing parts from sheet metal, there may in some rare cases be burrs on the edges of parts which could cause injury if fingers are moved across them. Use gloves to protect your hands.

◎ Only use designated parts!

The set's parts have specific safety properties (fire resistance, voltage resistance, etc.). For replacement parts, be sure to use parts which have the same poroperties. In particular, for the important safety parts that are marked ⚠ on wiring diagrams and parts lists, be sure to use the designated parts.

◎ Be sure to mount parts and arrange the wires as they were originally!

For safety seasons, some parts use tape, tubes or other insulating materials, and some parts are mounted away from the surface of printed circuit boards. Care is also taken with the positions of the wores omsode amd clamps are used to keep wires away from heating and high voltage parts, so be sure to set everything back as it was originally.

◎ Inspect for safety after servicing!

Check that all screws, parts and wires removed or disconnected for servicing have been put back in their original positions, inspect that no parts around the area that has been serviced have been negatively affected, conduct an inslation check on the external metal connectors and between the blades of the power plug, and otherwise check that safety is ensured.

(Insulation check procedure)
Unplug the power cord from the power outlet, disconnect the antenna, plugs, etc., and turn the power switch on. Using a 500V insulation resistance tester, check that the inplug and the externally exposed metal parts (antenna terminal, headphones terminal, input terminal, etc.) is 1MΩ or greater. If it is less, the set must be inspected and repaired.

CAUTION Concerning important safety parts

Many of the electric and structural parts used in the set have special safety properties. In most cases these properties are difficult to distinguish by sight, and using replacement parts with higher ratings (rated power and withstand voltage) does not necessarily guarantee that safety performance will be poreserved. Parts with safety properties are indicated as shown below on the wiring diagrams and parts lists is this service manual. Be sure to replace them with parts with the designated part number.

(1) Schematic diagrams .....Indicated by the ⚠ mark.
(2) Parts lists .....Indicated by the ⚠ mark.
Using parts other than the designated parts could result in electric shock, fires or other dangerous situations.

NOTE FOR SCHEMATIC DIAGRAM

WARNING:

Parts marked with this symbol ⚠ have critical characteristics. Use ONLY replacement parts recommended by the manufacturer.

CAUTION:

Before returning the unit to the customer, make sure you make either (1) a leakage current check or (2) a line to chassis resistance check. If the leakage current exceeds 0.5 milliamps, or if the resistance from chassis to either side of the power cord is less than 460 kohms, the unit is defective.

WARNING:

DO NOT return the unit to the customer until the problem is located and corrected.

NOTICE:

ALL RESISTANCE VALUES IN OHM. k=1,000 OHM / M=1,000,000 OHM
ALL CAPACITANCE VALUES IN MICRO FARAD. P=MICRO-MICRO FARAD EACH VOLTAGE AND CURRENT ARE MEASURED AT NO SIGNAL INPUT CONDITION. CIRCUIT AND PARTS ARE SUBJECT TO CHANGE WITHOUT PRIOR NOTICE.

NOTE FOR PARTS LIST

1. Parts for which "nsp" is indicated on this table cannot be supplied.
2. When ordering of part, clearly indicate "1" and "I" (i) to avoid mis-supplying.
3. Ordering part without stating its part number can not be supplied.
4. Part indicated with the mark "★" is not illustrated in the exploded view.
5. Not including General-purpose Carbon Film Resistor in the P.W.Board parts list. (Refer to the Schematic Diagram for those parts.)
6. Not including General-purpose Carbon Chip Resistor in the P.W.Board parts list. (Refer to the Schematic Diagram for those parts.)

WARNING: Parts marked with this symbol ⚠ have critical characteristics. Use ONLY replacement parts recommended by the manufacturer.

● Resistors

Ex.: RN | 14K | 2E | 182 | G | FR

Type	Shape and performance	Power	Resistance	Allowable error	Others
RD : Carbon		2B : 1/8 W	F : ±1%		P : Pulse-resistant type
RC : Composition		2E : 1/4 W	G : ±2%		NL : Low noise type
RS : Metal oxide film		2H : 1/2 W	J : ±5%		NB : Non-burning type
RW: winding		3A : 1 W	K : ±10%		FR : Fuse-resistor
RN : Metal film		3D : 2 W	M : ±20%		F : Lead wire forming
RK : Metal mixture		3F : 3 W			
		3H : 5 W			

* Resistance

1 8 2 ⇨ 1800ohm=1.8kohm
- 2: Indicates number of zeros after effective number.
- 18: 2-digit effective number.

1 R 2 ⇨ 1.2ohm
- 2: 1-digit effective number.
- 1R: 2-digit effective number, decimal point indicated by R.

: Units: ohm

● Capacitors

Ex.: CE | 04W | 1H | 3R2 | M | BP

Type	Shape and performance	Dielectric strength	Capacity	Allowable error	Others
CE : Aluminum foil electrolytic		0J : 6.3 V	F : ±1%		HS : High stability type
CA : Aluminium solid electrolytic		1A : 10 V	G : ±2%		BP : Non-polar type
CS : Tantalum electrolytic		1C : 16 V	J : ±5%		HR : Ripple-resistant type
CQ : Film		1E : 25 V	K : ±10%		DL : For change and discharge
CK : Ceramic		1V : 35 V	M : ±20%		HF : For assuring high requency
CC : Ceramic		1H : 50 V	Z : ±80%		U : UL part
CP : Oil		2A : 100 V	: - 20%		C : CSA part
CM: Mica		2B : 125 V	P : +100%		W : UL-CSA part
CF : Metallized		2C : 160 V	C : ±0.25pF		F : Lead wire forming
CH : Metallized		2D : 200 V	D : ±0.5pF		
		2E : 250 V	= : Others		
		2H : 500 V			
		2J : 630 V			

* Capacity (electrolyte only)

2 2 2 ⇨ 2200 μF
- 2: Indicates number of zeros after effective number.
- 22: 2-digit effective number.
- Units: μF.

2 R 2 ⇨ 2.2 μF
- 2: 1-digit effective number.
- 2R: 2-digit effective number, decimal point indicated by R
- Units: μF.

* Capacity (except electrolyte)

2 2 2 ⇨ 2200pF=0.0022 μF
- 2: Indicates number of zeros after efective number. (More than 2)
- 22: 2-digit effective number.
- Units:pF

2 2 1 ⇨ 220pF
- 1: Indicates number of zeros after effective numver. (0 or 1)
- 22: 2-digit effective number.
- Units:pF

・ When the dielectric strength is indicated in AC,"AC" is included after the dieelectric strength value.

TECHNICAL SPECIFICATIONS

❑ Audio Section

- **Power amplifier**

Rated output :

Front :
50 W + 50 W (8 Ω, 20 Hz – 20 kHz with 0.08 % T.H.D.)
75 W + 75 W (6 Ω, 1 kHz with 10 % T.H.D.)

Center :
50 W (8 Ω, 20 Hz – 20 kHz with 0.08 % T.H.D.)
75 W (6 Ω, 1 kHz with 10 % T.H.D.)

Surround :
50 W + 50 W (8 Ω, 20 Hz – 20 kHz with 0.08 % T.H.D.)
75 W + 75 W (6 Ω, 1 kHz with 10 % T.H.D.)

Surround Back :
50 W + 50 W (8 Ω, 20 Hz – 20 kHz with 0.08 % T.H.D.)
75 W + 75 W (6 Ω, 1 kHz with 10 % T.H.D.)

Output connectors : 6 – 8 Ω

- **Analog**

Input sensitivity/Input impedance : 130 mV/50 kΩ
Frequency response: 10 Hz – 100 kHz — ±3 dB (Source Direct mode)
S/N : 98 dB (IHF–A weighted, DIRECT mode)

❑ Video Section

- **Standard video connectors**

Input/output level and impedance : 1 Vp-p, 75 Ω
Frequency response : 5 Hz – 10 MHz — +1, –3 dB

- **Standard video connectors**

Input/output level and impedance :
Y (brightness) signal — 1 Vp-p, 75 Ω
PB / CB signal — 0.7 Vp-p, 75 Ω
PR / CR signal — 0.7 Vp-p, 75 Ω
Frequency response : 5 Hz – 60 MHz — +0, –3 dB

❑ Tuner section

[FM](Note: µV at 75 Ω, 0 dBf = 1 x 10^{-15} W)
Receiving Range (for U) **:**
[FM] 87.5 MHz – 107.9 MHz **[AM]**520 kHz – 1710 kHz
Receiving Range (for N) **:**
[FM] 87.5 MHz – 108.0 MHz **[AM]**522 kHz – 1611 kHz
Usable Sensitivity :
[FM]1.2 µV (12.8 dBf) **[AM]**18 µV
50 dB Quieting Sensitivity (for U) **:**
[FM]MONO 2.8 µV (20.2 dBf)
50 dB Quieting Sensitivity (for N) **:**
[FM]MONO 2.0 µV (17.3 dBf)
STEREO 42 µV (34.5 dBf)
S/N (IHF-A) :
[FM]MONO 70 dB
STEREO 67 dB
Total harmonic Distortion (at 1 kHz) (for U) **:**
[FM]MONO 0.7 %
STEREO 1.0 %
Total harmonic Distortion (at 1 kHz) (for N) **:**
[FM]MONO 0.3 %
STEREO 0.7 %

❑ General

Power supply (for U) **:** AC 120 V, 60 Hz
Power supply (for N) **:** AC 230 V, 50 Hz
Power consumption :
250 W
0.2 W (Standby)
3 W (CEC standby)
Maximum external dimensions :
440 (W) x 105 (H) x 367 (D) mm
Weight : 9.0 kg

❑ Remote Control Unit (RC010SR)

Batteries : R03/AAA Type (two batteries)

DIMENSION

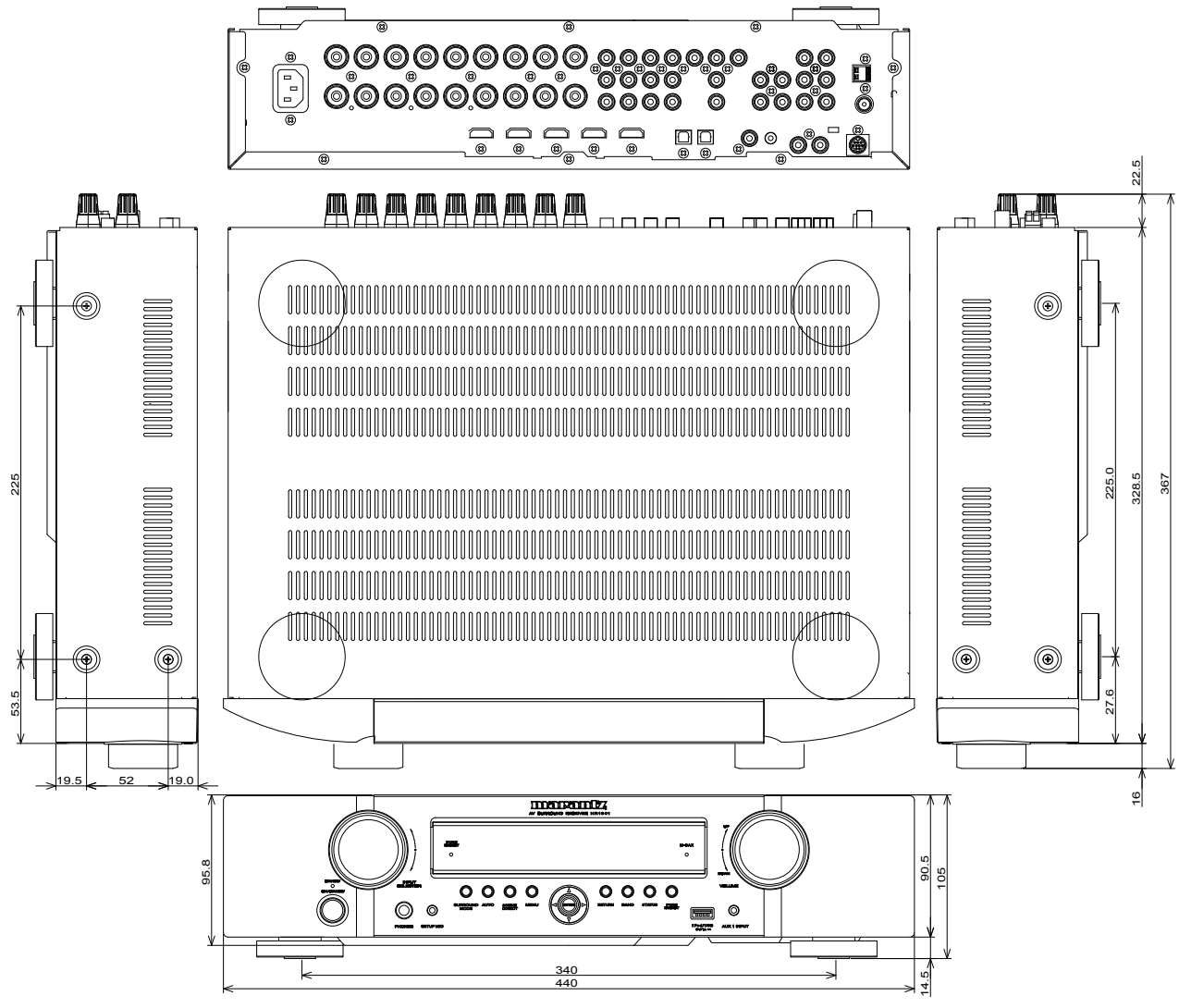

CAUTION IN SERVICING

Initializing AV SURROUND RECEIVER

AV SURROUND RECEIVER initialization should be performed when the µcom, peripheral parts of µcom, and Digital P.W.B. are replaced.

1. Turn off the power using ON/STANDBY button.
2. Press ON/STANDBY button while simultaneously pressing ENTER and RETURN buttons.
3. Check that the entire display is flashing with an interval of about 1 second, and release your fingers from the 2 buttons and the microprocessor will be initialized.

Note: •If step 3 does not work, start over from step 1.
•All user settings will be lost and this factory setting will be recovered when this initialization mode. So make sure to memorize your setting for restoring after the initialization.

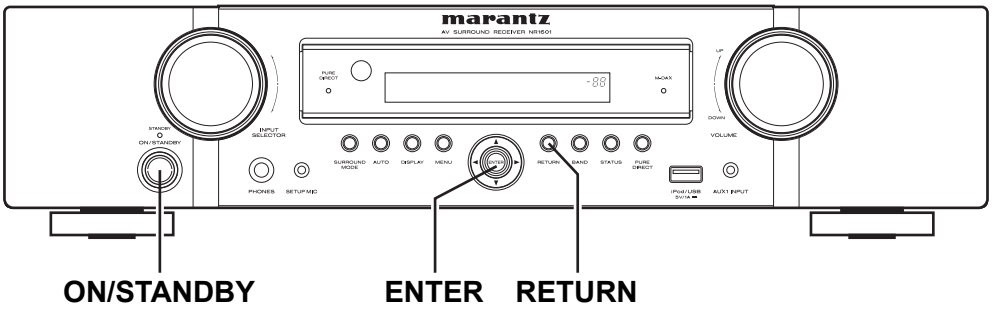

Service Jigs

When you repair the printing board, you can use the following JIG (Extension cable kit).
Please order to marantz Official Service Distributor in your region if necessary.

8U-110084S : EXTENSION UNIT KIT : 1 Set
(Refer to "JIG FOR SERVICING".)

When you update the firmware, you can use the following
JIG (RS232C to internal connector conversion adapter with 4P FFC cable kit).
Please order to marantz Official Service Distributor in your region if necessary.

8U-210100S : WRITING KIT : 1 Set
(Refer to "VERSION UPGRADE PROCEDURE OF FIRMWARE".)

DISASSEMBLY

- Disassemble in order of the arrow of the figure of following flow.
- In the case of the re-assembling, assemble it in order of the reverse of the following flow.
- In the case of the re-assembling, observe "attention of assembling" it.
- If wire bundles are untied or moved to perform adjustment or parts replacement etc., be sure to rearrange them neatly as they were originally bundled or placed afterward.
  Otherwise, incorrect arrangement can be a cause of noise generation.

CABINET TOP

FRONT PANEL ASSY
Refer to **"DISASSEMBLY 1. FRONT PANEL ASSY"** and **"EXPLODED VIEW"**
- PCB H/P (Ref. No. of EXPLODED VIEW : 11)
- PCB USB (Ref. No. of EXPLODED VIEW : 16)
- PCB FRONT (Ref. No. of EXPLODED VIEW : 26)

RADIATOR ASSY
Refer to **"DISASSEMBLY 2. RADIATOR ASSY"** and **"EXPLODED VIEW"**
- PCB GUIDE_L (Ref. No. of EXPLODED VIEW : 20)
- PCB 7CH_AMP ASSY (Ref. No. of EXPLODED VIEW : 25)
- PCB GUIDE_H/S (Ref. No. of EXPLODED VIEW : 29)
- PCB GUIDE_R (Ref. No. of EXPLODED VIEW : 30)

PCB REG CNT/PCB REG
Refer to **"DISASSEMBLY 3. PCB REG CNT/PCB REG"** and **"EXPLODED VIEW"**
- PCB REG (Ref. No. of EXPLODED VIEW : 44)
- PCB REG_CNT (Ref. No. of EXPLODED VIEW : 43)

HDMI UNIT ASSY
Refer to **"DISASSEMBLY 4. HDMI UNIT ASSY"** and **"EXPLODED VIEW"**
- PCB FRONT_CNT (Ref. No. of EXPLODED VIEW : 45)
- PCB SIDE_CNT (Ref. No. of EXPLODED VIEW : 47)
- PCB AUDIO_VIDEO ASSY (Ref. No. of EXPLODED VIEW : 48)
- PCB HDMI ASSY (Ref. No. of EXPLODED VIEW : 49)
- PCB RC-5/M-X (Ref. No. of EXPLODED VIEW : 50)

PCB SPK/PCB SMPS
Refer to **"DISASSEMBLY 5. PCB SPK/PCB SMPS"** and **"EXPLODED VIEW"**
- PCB SPK (Ref. No. of EXPLODED VIEW : 42)
- PCB SMPS (Ref. No. of EXPLODED VIEW : 41)

About the photos used for descriptions in the "DISASSEMBLY" section.

- The direction from which the photographs used herein were photographed is indicated at "Direction of photograph: ***" at the left of the respective photographs.
- Refer to the table below for a description of the direction in which the photos were taken.
- Photographs for which no direction is indicated were taken from above the product.
- The Photographs is NR1601 N1B model.

The viewpoint of each photograph (Photografy direction)

[View from above]

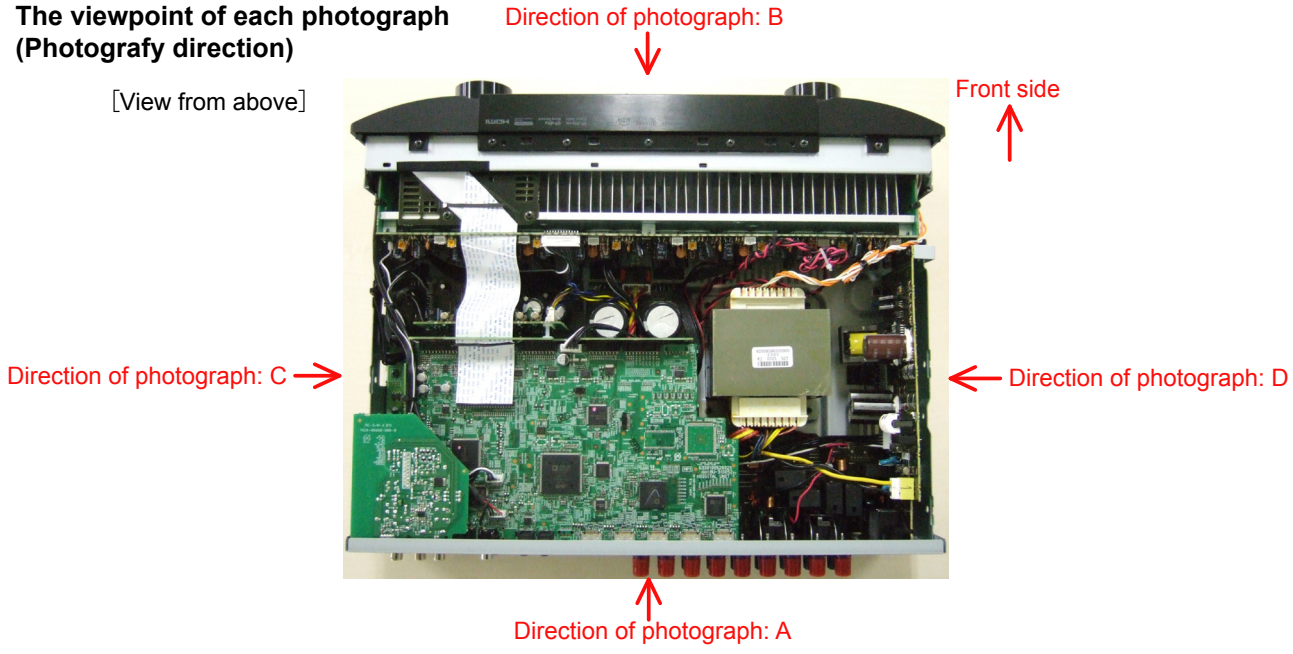

1. FRONT PANEL ASSY

Proceeding : CABINET TOP → FRONT PANEL ASSY

(1) Remove the screws.

View from bottom

(2) Cut the wire clamp bands, then remove the screws.

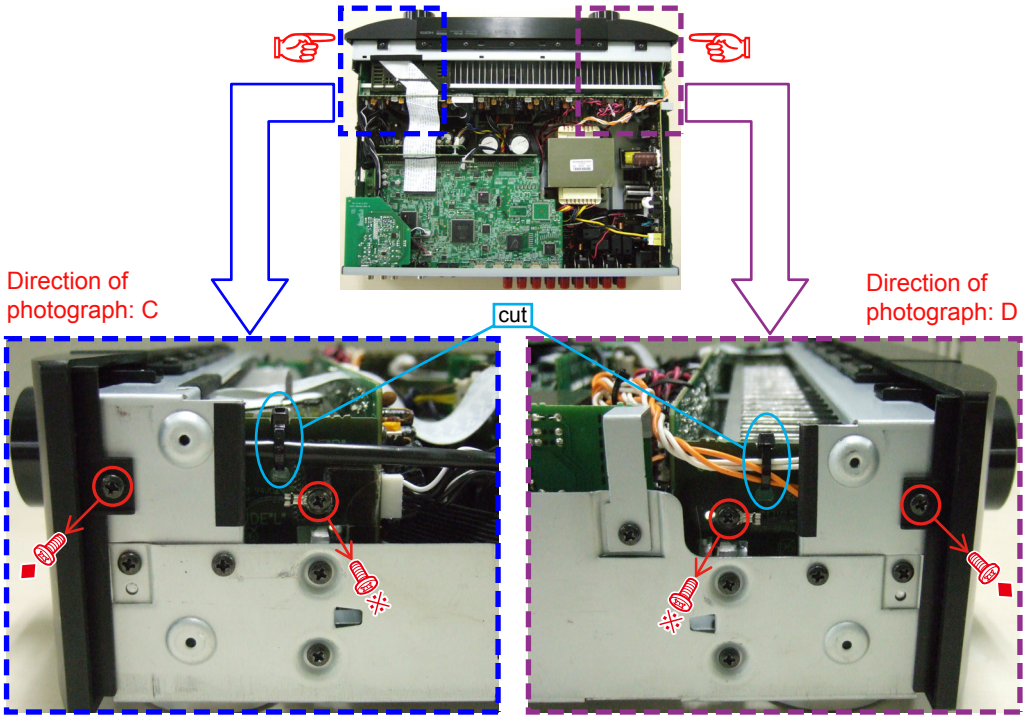

(3) Disconnect the connector wires and FFC cable. Remove the screws.

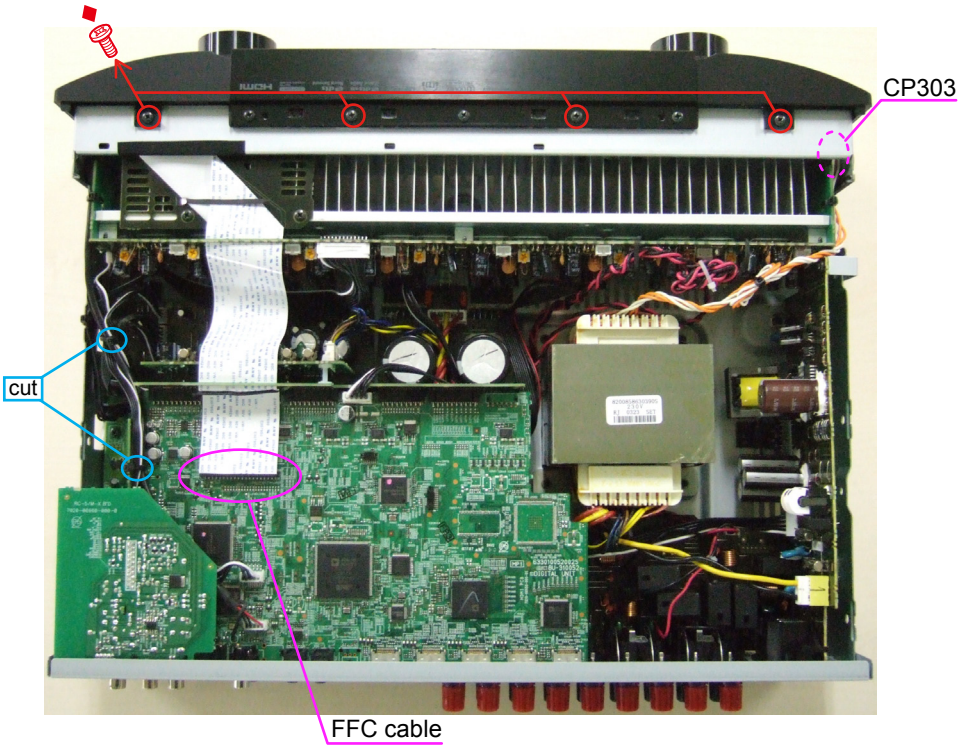

Please refer to "EXPLODED VIEW" for the disassembly method of each PCB included in FRONT PANEL ASSY.

2. RADIATOR ASSY

Proceeding : CABINET TOP → FRONT PANEL ASSY → RADIATOR ASSY

(1) Remove the screws.

View from bottom

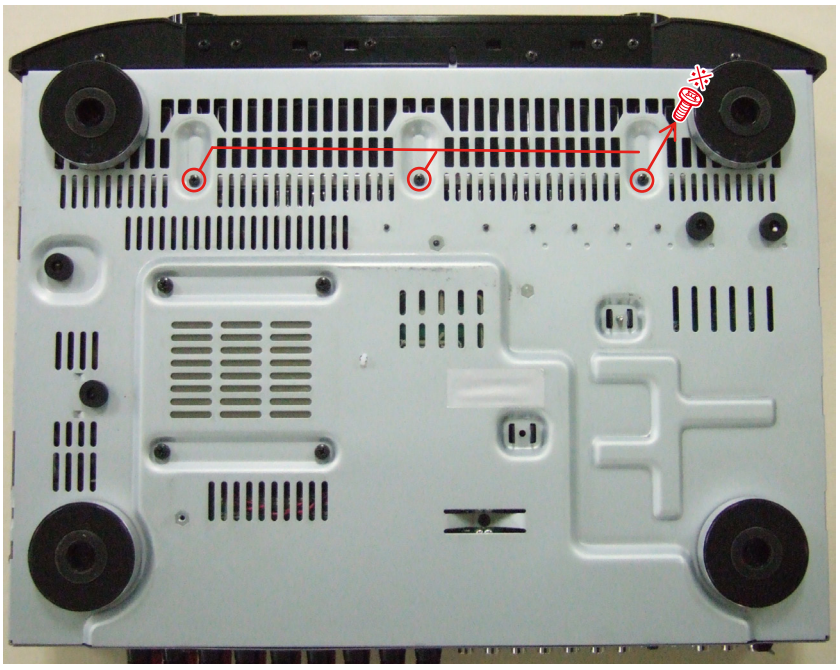

(2) Remove the screws.

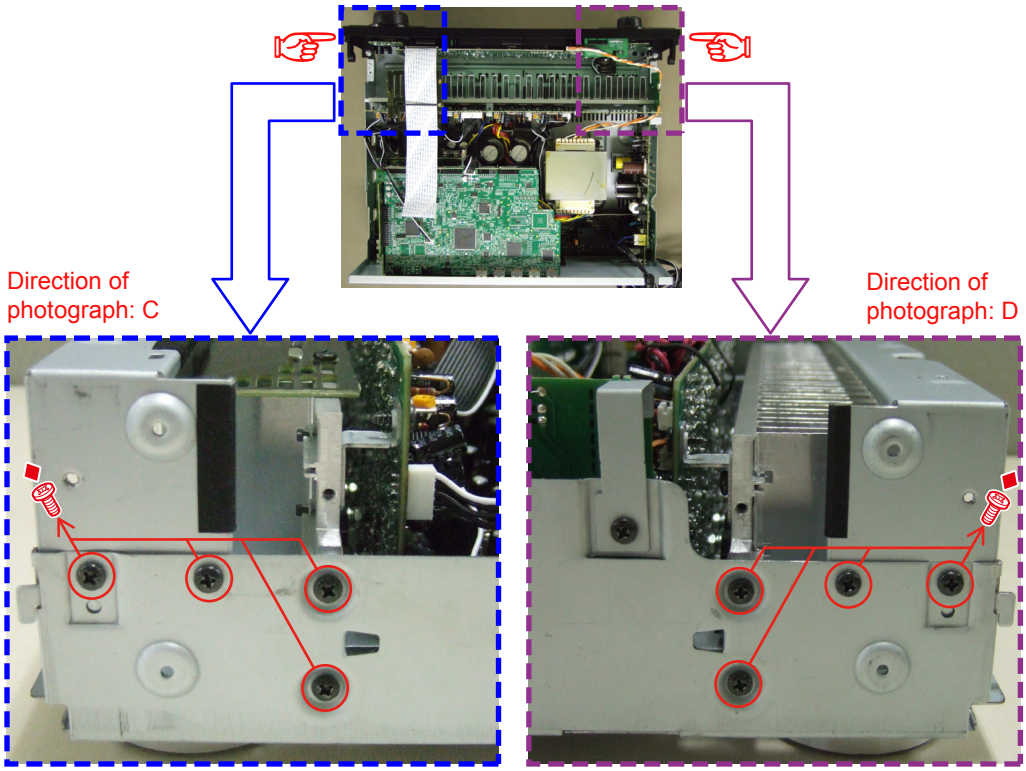

(3) Disconnect the connector wires.

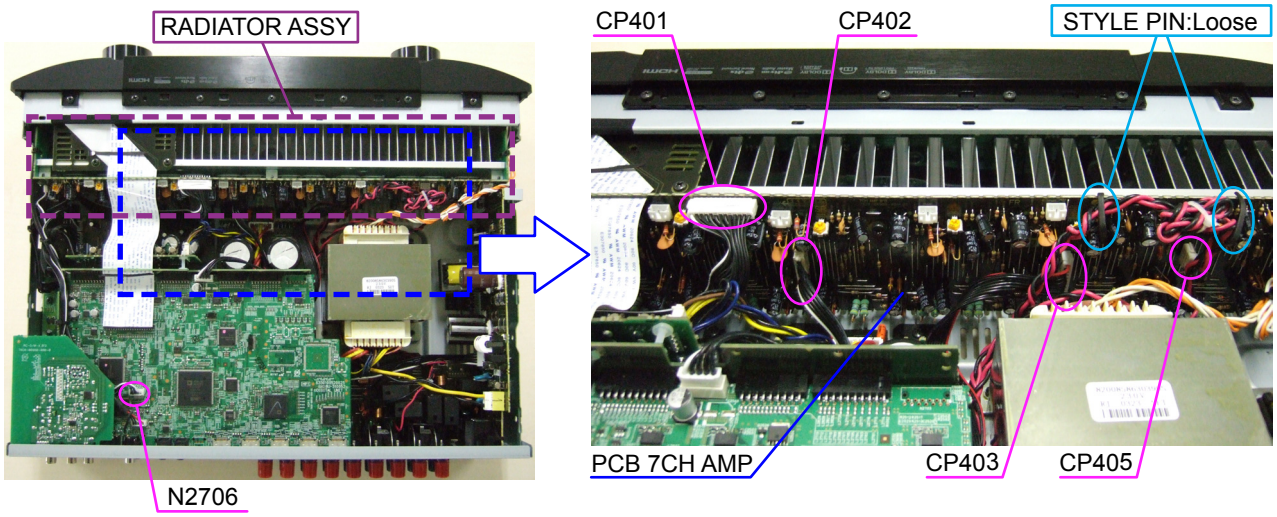

Please refer to "EXPLODED VIEW" for the disassembly method of each P.W.B included in RADIATOR ASSY.

3. PCB REG CNT/PCB REG

Proceeding : CABINET TOP → FRONT PANEL ASSY → RADIATOR ASSY → PCB REG CNT/PCB REG

(1) Remove the screws.

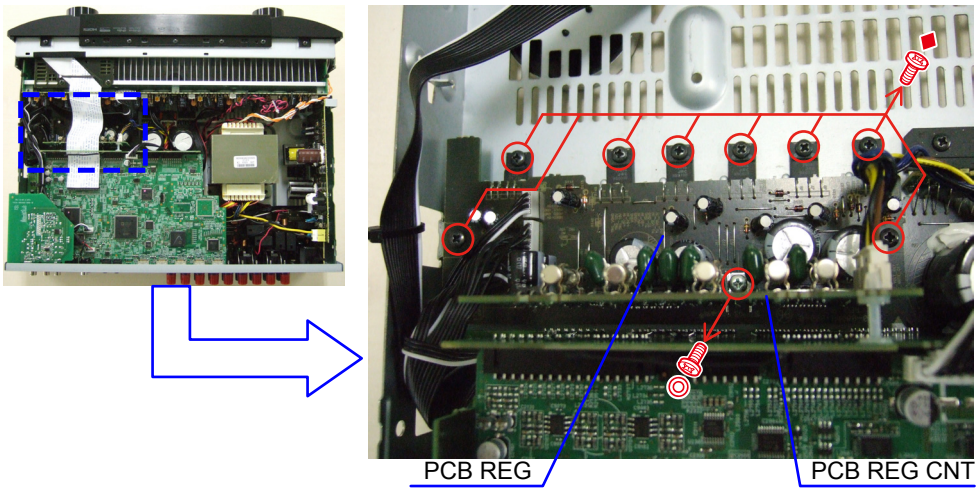

(2) Disconnect the connector wires and connector board.

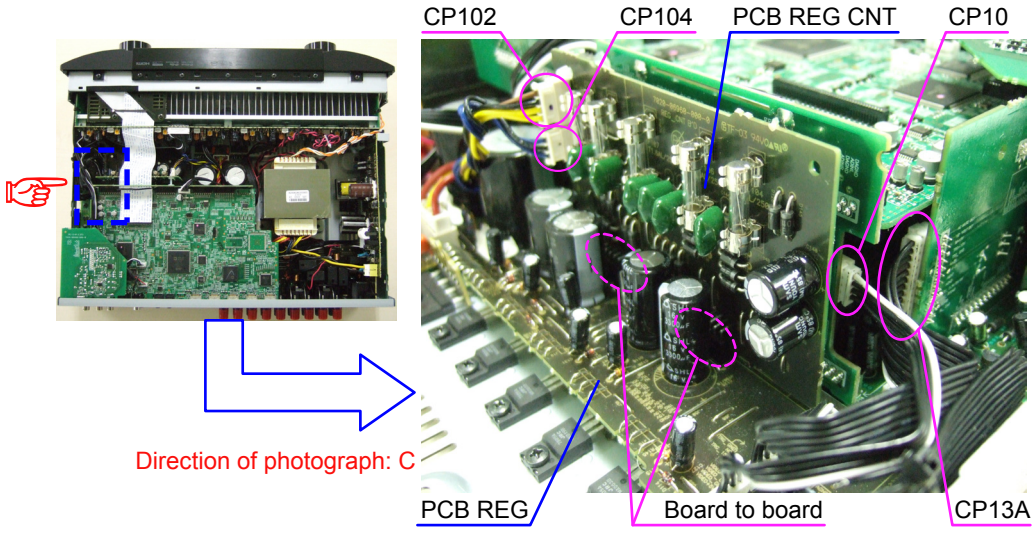

4. HDMI UNIT ASSY

Proceeding : CABINET TOP → HDMI UNIT ASSY

(1) Cut the wire clamp bands, then disconnect the connector wire and FFC cable.

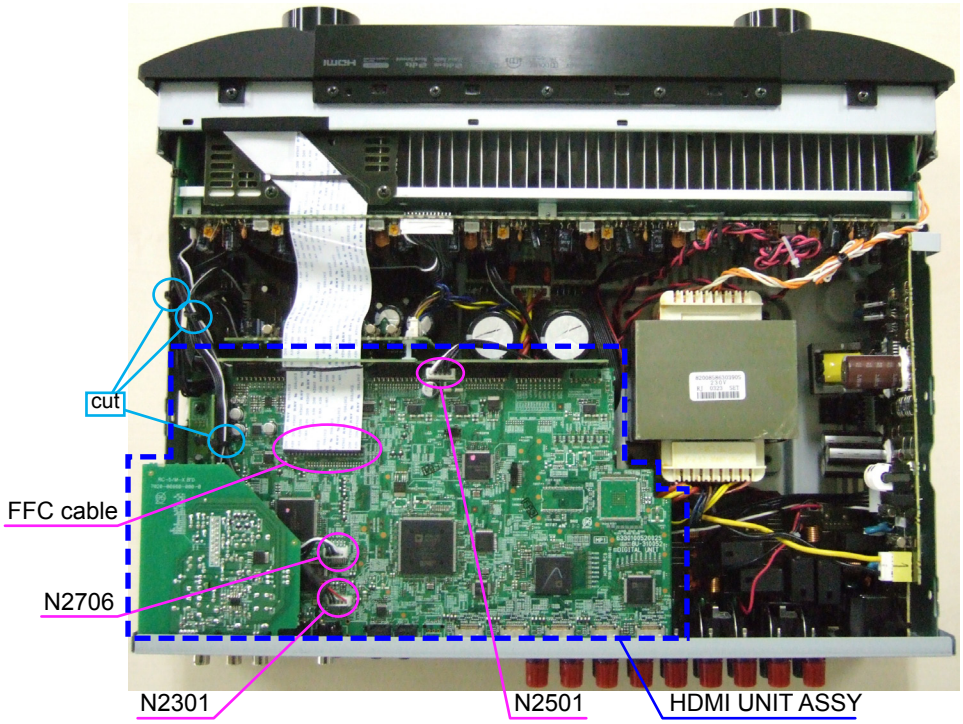

(2) Remove the screws, then remove the BACK PANEL.

Direction of photograph: A

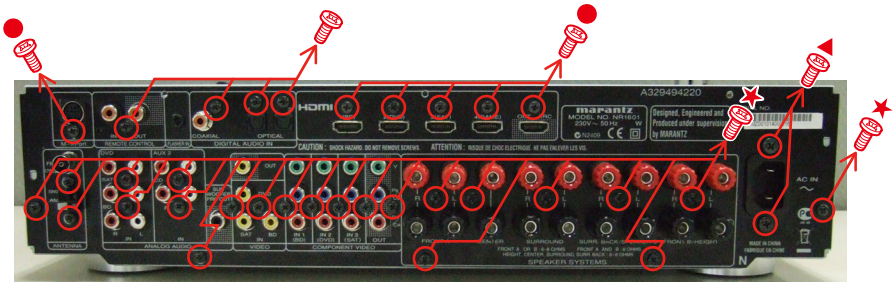

(3) Remove the PCB RC-5/M-X.

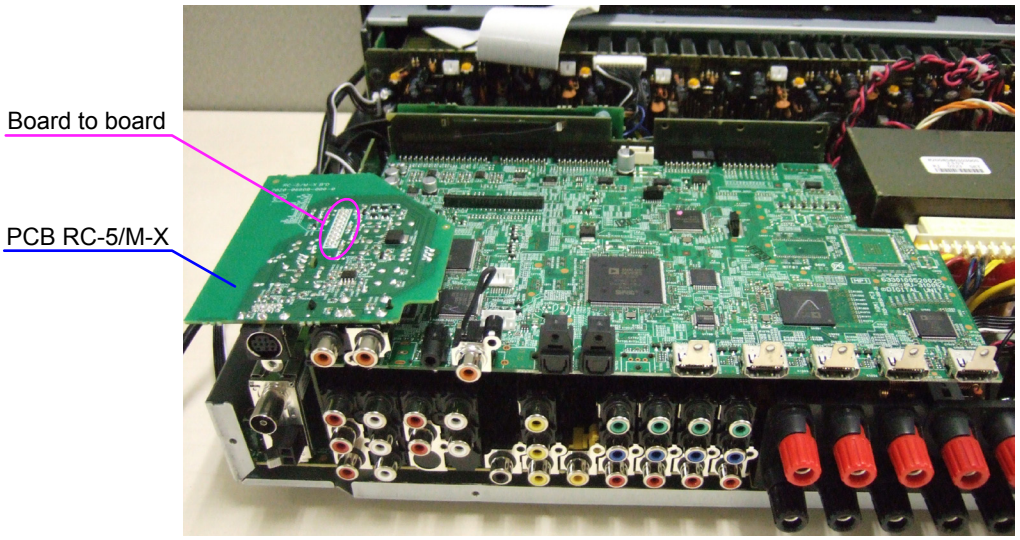

(4) Disconnect the connector board.

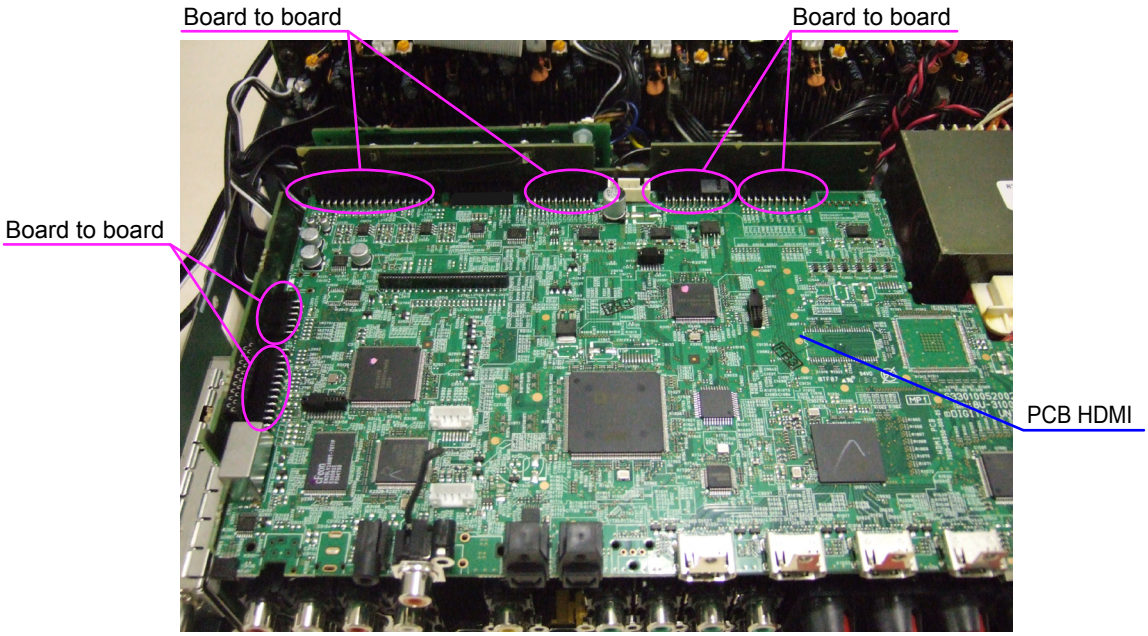

(5) Remove the screws.

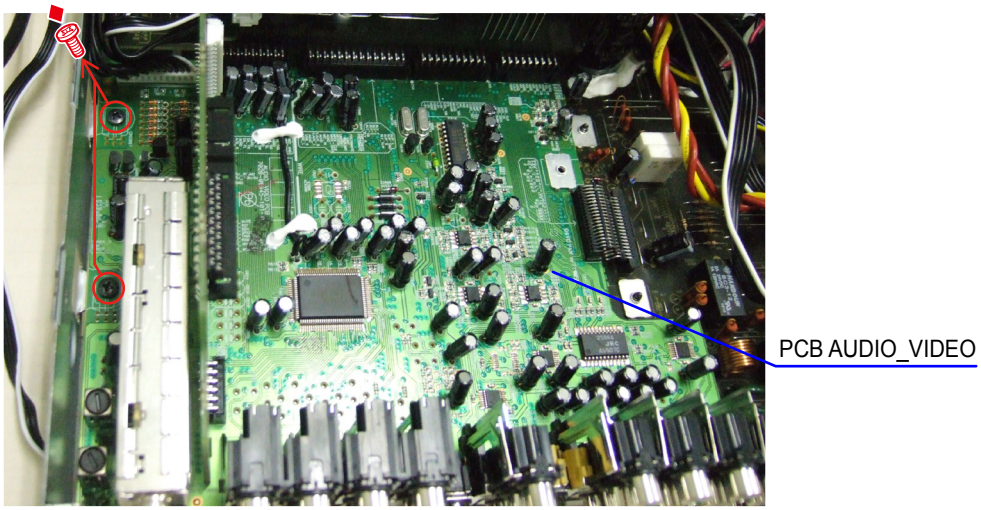

(6) Disconnect the connector wires.

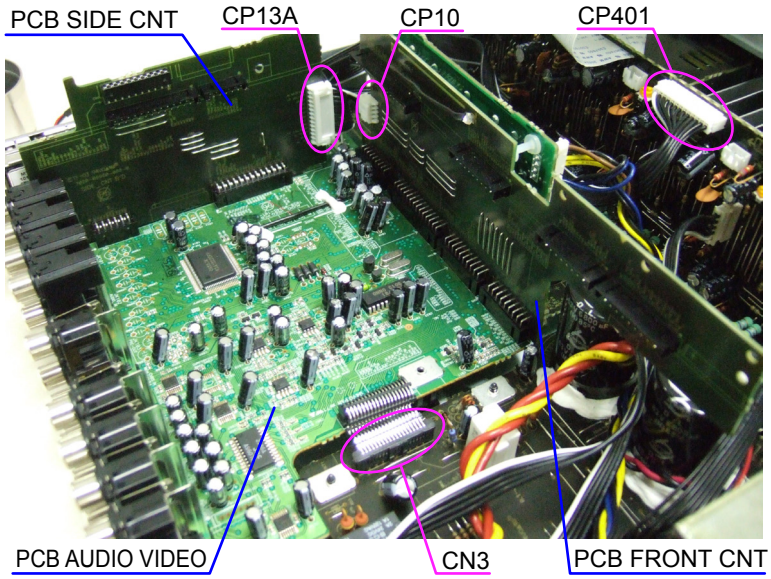

(7) Disconnect the connector board.

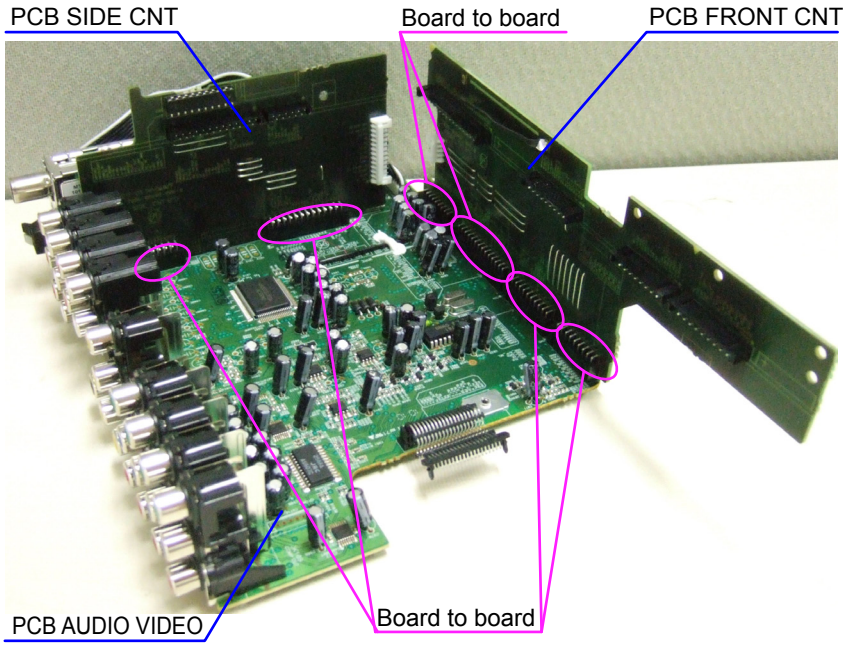

Please refer to "EXPLODED VIEW" for the disassembly method of each P.W.B included in HDMI UNIT ASSY.

5. PCB SPK/PCB SMPS

Proceeding : CABINET TOP → HDMI UNIT ASSY → PCB SPK/PCB SMPS

(1) Remove the Sheet, then remove the screws and SUPPORTER P.C.

View from bottom

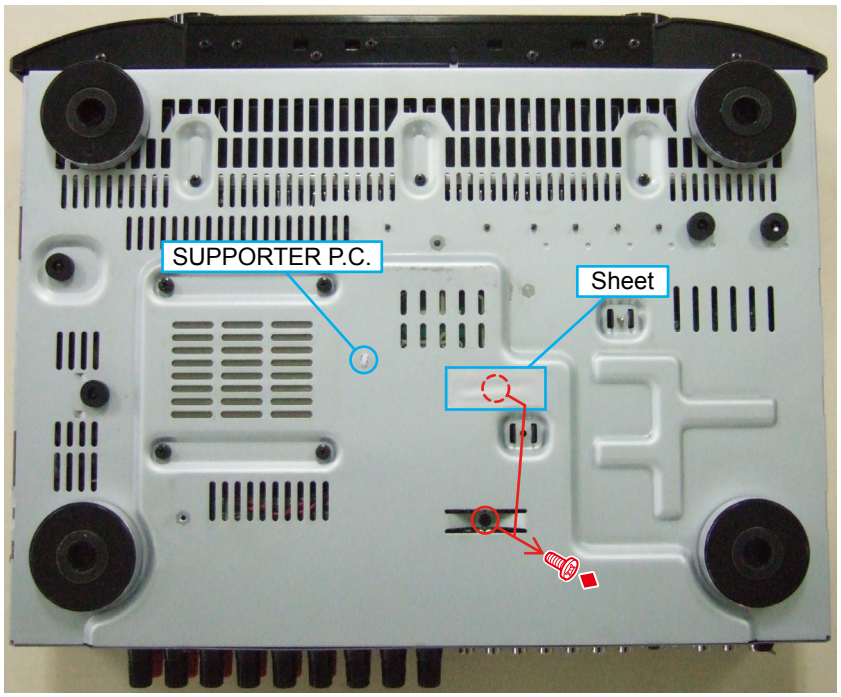

(2) Disconnect the connector wire, then remove the screws.

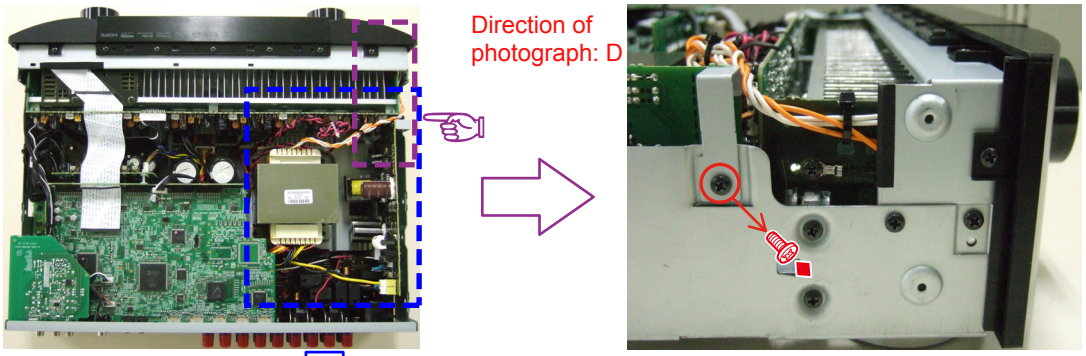

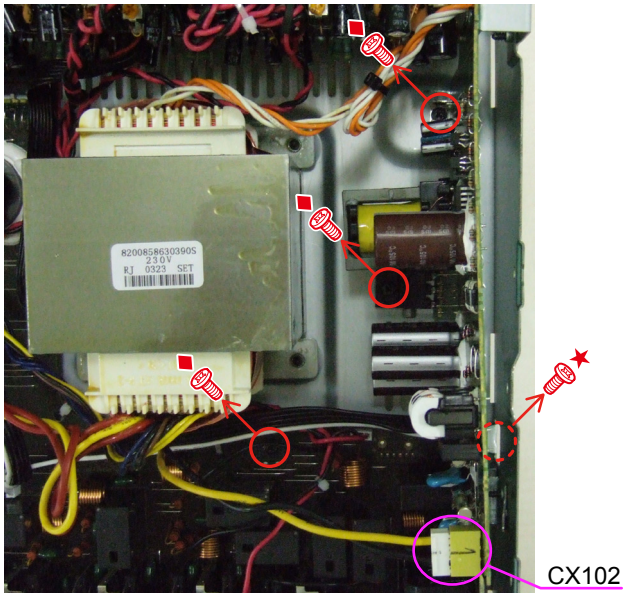

(3) Disconnect the connector wire, then remove the screws. Remove the PCB SPK/PCB SMPS from the main unit.

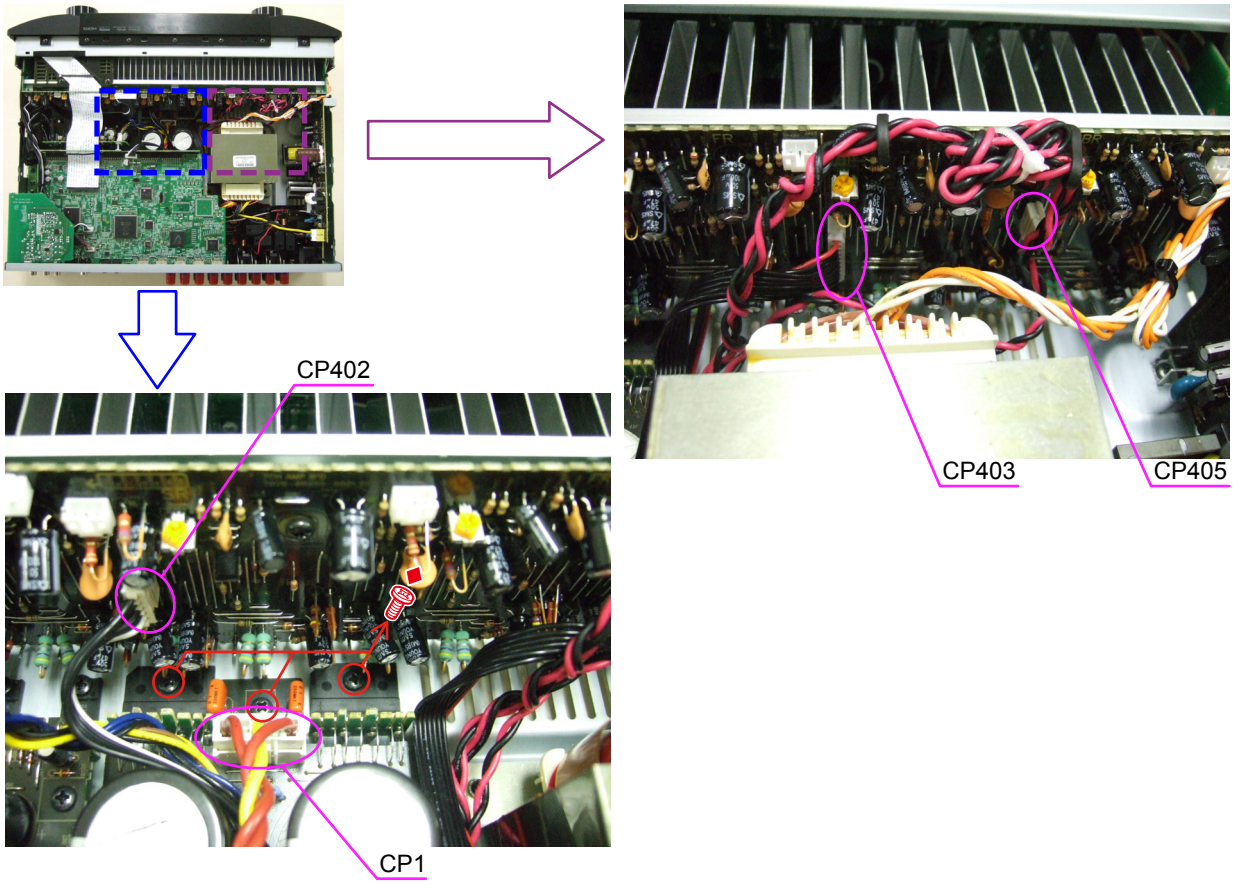

(4) Disconnect the connector board.

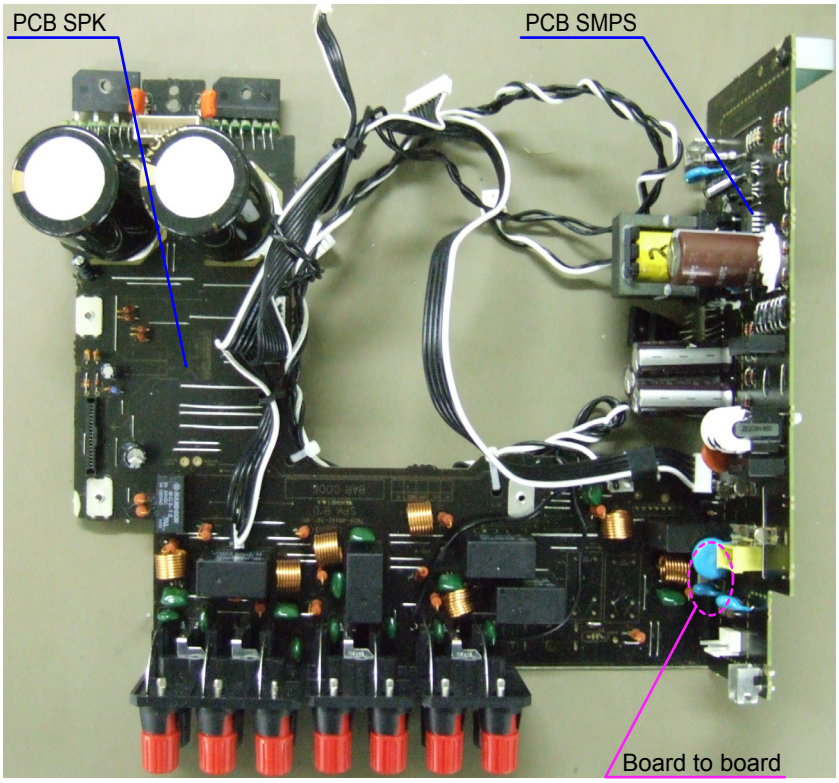

SPECIAL MODE

Special mode setting button

※ Press the ON/STANDBY button to turn on while pressing both buttons A and B at the same time.

Mode	Button A	Button B	Contents
µcom/DSP Version display mode	ENTER	SURROUND MODE	Firmware versions such as Main, Sub, DSP are displayed in the FL manager. Errors are displayed when they occur. (Refer to 18 page.)
Errors checking mode (Displaying the protection history)	SURROUND MODE	BAND	Displaying the protection history (Refer to 19 page.)
Initialization mode	ENTER	RETURN	Backup data initialization is carried out. (Refer to 6 page.)
Panel lock mode	PURE DIRECT	BAND	Operations using main unit panel buttons or master volume are rejected.
Panel lock mode (Remove Master volume)	PURE DIRECT	DISPLAY	Operations using main unit panel buttons are rejected.
Cancellation of panel lock mode	PURE DIRECT	RETURN	Panel lock mode is cancelled.

※ When power is turned on, pressing both buttons A and B at the same time for 3 seconds or more.

Mode	Button A	Button B	Contents
Mode for preventing remote control acceptance	SURROUND MODE	STATUS	Operations using remote control are rejected. Select with the CURSOR ◄ ► button.
DUAL BACKUP MEMORY (Backup)	STATUS	ENTER	Backup of DUAL BACKUP MEMORY is performed. (Refer to 21 page.)
DUAL BACKUP MEMORY (Recovery)	STATUS	MENU	Recovery of DUAL BACKUP MEMORY is performed. (Refer to 21 page.)
DUAL BACKUP MEMORY (Backup Clear)	STATUS	AUTO	Backup of DUAL BACKUP MEMORY is cleared. (Refer to 21 page.)

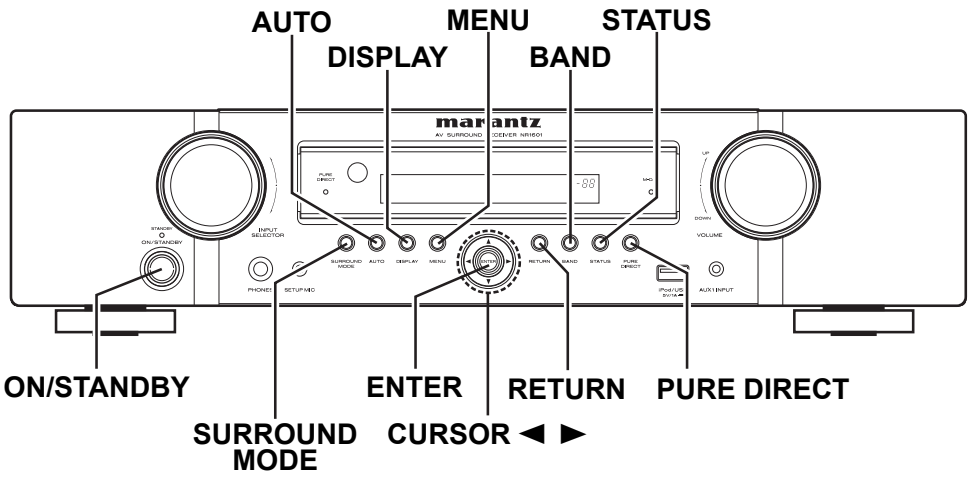

1. µcom/DSP Version display mode

1.1. Operation specifications

µcom/DSP version display mode:

When started up, the version information is displayed.

Starting up:

With the "ENTER" and "SURROUND MODE" buttons pressed, press the "ON/STANDBY" button to turn the power on. Now, press the "STATUS" button to the display the 2nd item information on the FL Display.

1.2. Display Order

Destination information → Main-µcom version → Main 1st Boot version → Sub-µcom version → Sub 1st Boot Loader Version → DSP version → APLD version → USB version

1.3. Error display

See the following table for each "Error information" display and its contents (status).
Display order is ①,②,③,④,⑤.

Condition	State	State
① Sub-µcom NG	No response from Sub-µcom	SUB ERROR 01
② DIR NG	No response from DIR	DIR ERROR 01
③ DSP1 NG	When DSP boot, executing DSP reset makes no change to DSP1 FLAG0 port "H".	DSP ERROR 01
	No change to DSP FLAG0 port "H" before issuing DSP command.	DSP ERROR 02
	When DSP data read, executing WRITE="L" makes no change to ACK="H".	DSP ERROR 03
	When DSP data read, executing REQ="L" makes no change to ACK="L".	DSP ERROR 04
	When DSP data write, executing WRITE="H" makes no change to ACK="H".	DSP ERROR 05
	When DSP data write, executing REQ="L" makes no change to ACK="L".	DSP ERROR 06
	When DSP special code boot, executing DSP reset makes no change to DSP FLAG0 port "H".	DSP ERROR 11
	No change to DSP FLAG0 port "H" before issuing DSP special read command.	DSP ERROR 12
	No change to DSP FLAG0 port "H" before DSP version read.	DSP ERROR 13
④ EEPROM NG	Error appeared in EEPROM checksum.(*** is a block address number.)	E2PROM ERR***
⑤ Both SUB/DSP /EEPROM OK		(No error display, version display only)

2. Errors checking mode (Displaying the protection history)

2.1. Operation specifications

Error mode (Displaying the protection history):

When started up, the error information is displayed.

Starting up:

●All model commonness

With the "SURROUND MODE" and "BAND" buttons pressed, press the "ON/STANDBY" button to turn the power on. The error (protection history display) mode is set.
Now, press the "STATUS" button to turn on the FL display.

2.2. About the display on the FL display

When the "STATUS" button is pressed after setting the error (protection history display) mode, a history like the one shown below is displayed, depending on the conditions.

(1) Normally (when there has been no protection incident)

FLD	N	O		P	R	O	T	E	C	T						

(2) For ASO (when the last protection incident was ASO protection)

FLD	P	R	T	:	A	S	O									

Cause: The line between speaker terminals is shorted, or use speakers having impedance less than that specified.
Supplementary information: As the excess current is detected after operation of the speaker relay, the shorted speaker terminal and the connected speaker can be identified.

Turning on the power without correcting the abnormality will cause the protection function to work about 5 seconds later and the power supply will be shut off.

(3) For DC (when the last protection incident was DC protection)

FLD	P	R	T	:	D	C										

Cause: DC output of the power amplifier is abnormal.

Turning on the power without correcting the abnormality will cause the protection function to work about 5 seconds later and the power supply will be shut off.

(4) For THERMAL (when the last protection incident was THERMALprotection)

FLD	P	R	T	:	T	H	E	R	M	A	L					

Cause: The temperature of the heat sink is excessive.

Turning on the power without correcting the abnormality will cause the protection function to work about 5 seconds later and the power supply will be shut off.

∗ Additional causes of protection can be due to loose connections, associated components, Microprocessor, etc.

When the "STATUS" button is pressed again after the above protection history is displayed, the normal display reappears.

2.3. Clearing the protection history

There are two ways to clear the protection history, as described below.

(1) Start up the error (protection display) mode, display the error, then press and hold in the "ENTER" button for 3 seconds.

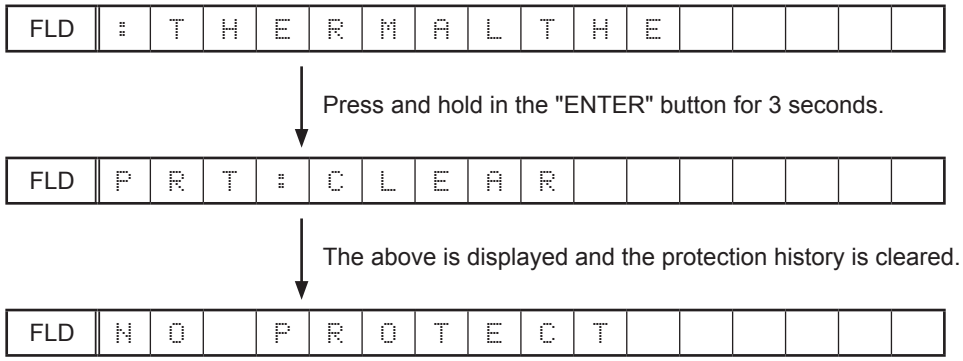

(2) Initialize. (Refer to "Initializing AV SURROUND RECEIVER" 6 page.)

※ If you want to save a backup, use the method in 2.3.(1) above.

Warning indication by the POWER LED

If the power is turned off when a protection incident has been detected, the POWER LED (red) flashes as a warning according to the conditions in which the protection incident occurred.

(1) ASO/DC PROTECTION : Flashes in cycles of 0.5 seconds (0.25 seconds lit, 0.25 seconds off)

(2) THERMAL PROTECTION : Flashes in cycles of 2 seconds (1 second lit, 1 second off)

3. DUAL BACKUP MEMORY

This product has a Dual Backup Memory function. The conventional Backup functions to memorize, in the EEPROM (U3103) in the circuit, a current setting of the moment the main power is turned off so that it can be restored when it is turned ON again. Meanwhile, the DUAL BACKUP MEMORY is capable of memorizing any arbitrary setting that is configured while the product is in operation so as to restore it at any time. When servicing units returned from end-users for repairs, use this function to back up the current setting (e.g. Tuner Preset). This will enable the units to be returned to the users after repairs, with the setting unchanged.

NOTE : If end-users use this function, the data will be overwritten.
The contents of the memory do not disappear even if you initialize this unit.
If you want to erase, please refer to 3.2. SERVICE PRECAUTIONS.

3.1. HOW TO OPERATE

-Backup-

(1) Configure a setting you would like to save in the MEMORY and hold down the "STATUS" and "ENTER" buttons on the Front Panel at the same time for 3 seconds or more.

(2) The FL Display indicates "MEMORY SAVING" while the Backup is being performed.

FLD	M	E	M	O	R	Y		S	A	V	I	N	G			

(3) The FL Display indicates "COMPLETE" when the Backup is completed.

FLD	C	O	M	P	L	E	T	E								

-Recovery-

(1) Hold down the "STATUS" and "MENU" buttons at the same time for 3 seconds or more.

(2) The FL Display indicates "MEMORY LOAD" while the Recovery is being performed.

FLD	M	E	M	O	R	Y		L	O	A	D					

(3) After the FL Display indicates "COMPLETE", the product goes into Standby mode. When the power is restored, the Recovery is completed.

FLD	C	O	M	P	L	E	T	E								

The FL Display indicates "NO BACKUP" if the DUAL BACKUP MEMORY has not been activated with no data to be recovered saved in the Memory.

FLD	N	O		B	A	C	K	U	P							

3.2. SERVICE PRECAUTIONS

When the Flash Rom (U3103) on the HDMI PWB is replaced make sure, in order to maintain consistency with the Backup Memory, to clear the DUAL BACKUP MEMORY in thefollowing way :

-How to clear the Backup Memory-

(1) Hold down the "STATUS" and "AUTO" buttons at the same time for 3 seconds or more.

(2) The FL Display indicates "BACKUP CLEAR" while the memory is being cleared.

FLD	B	A	C	K	U	P		C	L	E	A	R				

(3) After the FL Display indicates "COMPLETE", the operation is completed.

FLD	C	O	M	P	L	E	T	E								

JIG FOR SERVICING

When you repair the printing board, you can use the following JIG (Extension cable kit).
Please order to marantz Official Service. Distributor in your region if necessary.

Note: When the connection which is wrong in the JIG (EXTENSION UNIT KIT) is done it becomes cause of damage.

8U-110084S : EXTENSION UNIT KIT : 1 Set

• Connection of PCB HDMI JIG

-Preparation-

8U-110084S : EXTENSION UNIT KIT : 1 Set
Insulation sheet (Do not supply it) : 1 sheet
Ground lead (Do not supply it) : 1 pc

-Procedures-

(1) Remove the screws.

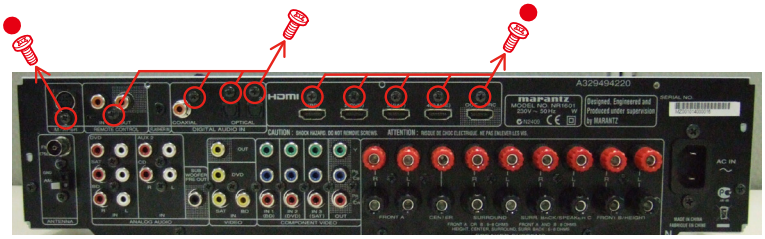

(2) Disconnect the connector board.

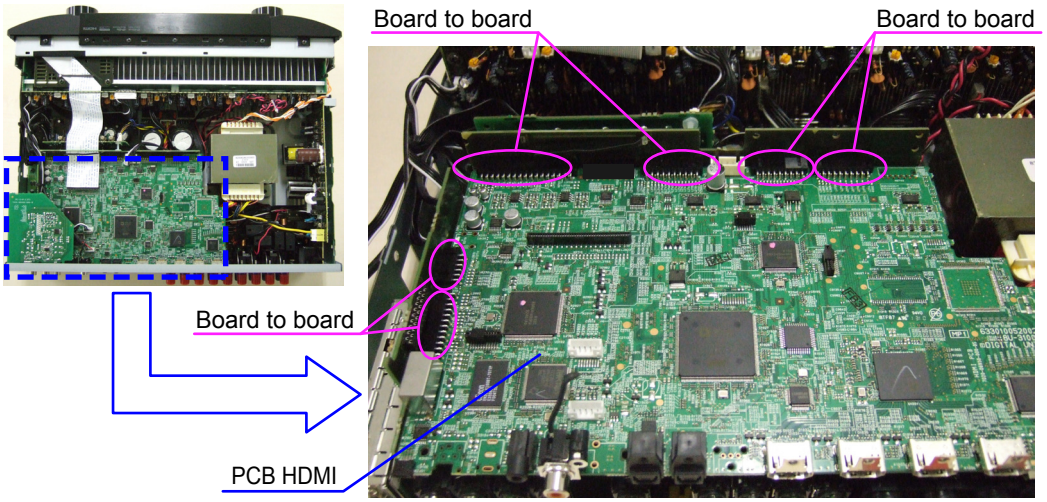

(3) PCB HDMI is detached from the chassis, and it puts it into the state turned inside out.
Please pave an insulation sheet that is larger than PCB HDMI under PCB.
※ Connect the ground point of PCB to the chassis with a ground lead or the like.

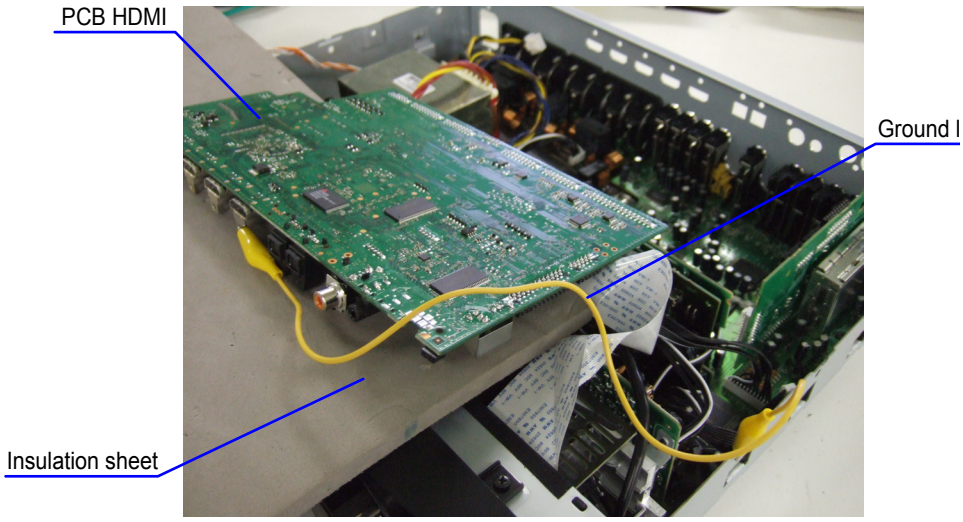

(4) Connect the four extension jig cables.

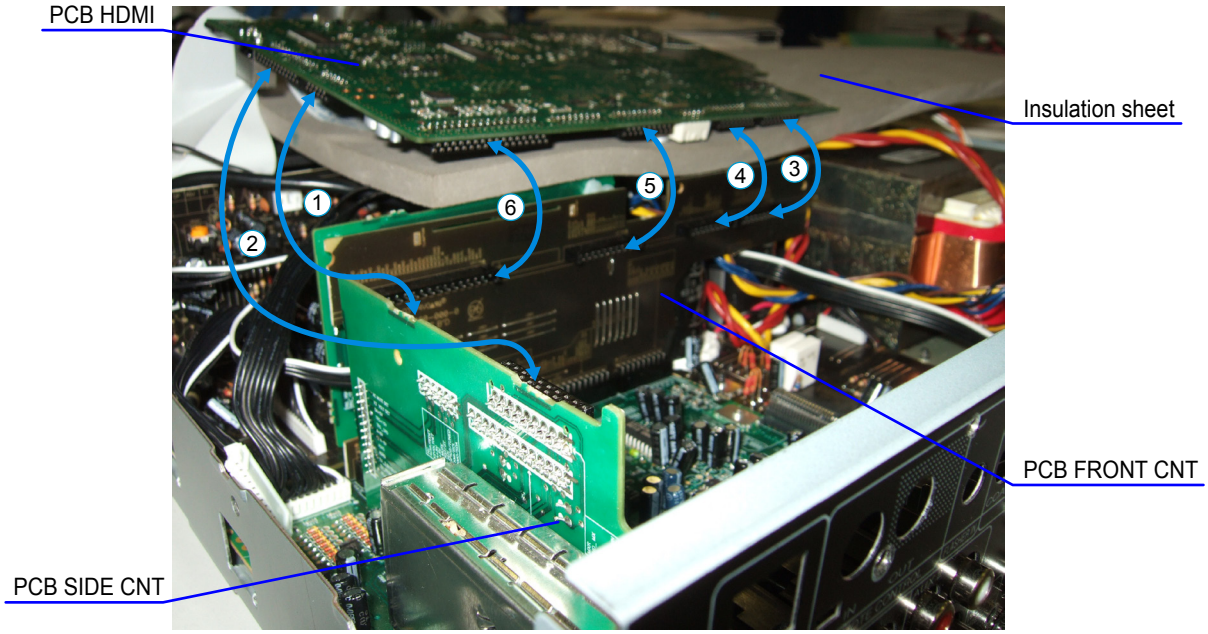

Connection table of Board to Board

No.	Pin	Ref. No.	PCB		Ref. No.	PCB
①	11 pin	CP3	SIDE CNT	⟷	N2709	HDMI
②	25 pin	CP4	SIDE CNT	⟷	N2708	HDMI
③	19 pin	CP105	FRONT CNT	⟷	N2701	HDMI
④	17 pin	CP106	FRONT CNT	⟷	N2702	HDMI
⑤	19 pin	CP108	FRONT CNT	⟷	N2704	HDMI
⑥	33 pin	CP110	FRONT CNT	⟷	N2707	HDMI

ABOUT REPLACE THE MICROPROCESSOR WITH A NEW ONE

When replaced of the U-PRO (Microprocessor) or the Flash ROM, confirm contents of the following.

PWB Name	Ref. No.	Description	After replaced	Remark
DIGITAL	U3102	R5F64169DFD	**B**	SOFTWARE: Main
DIGITAL	U3301	R5F3650KNFB	**B**	SOFTWARE: Sub
DIGITAL	U1903	EN29LV160BB-70TIP	**B**	SOFTWARE: DSP ROM
DIGITAL	U1707	EPM3032A	**B**	SOFTWARE: Audio PLD

After replaced

A : Mask ROM (With software). No need write-in of software to the microprocessor.

B : Flash ROM (With software). Usually, no need write-in of software. But, when the software was updated, you should be write-in of the new software to the microprocessor or flash ROM. Please check the software version.

C : Empty Flash ROM (Without software). You should be write-in of the software to the microprocessor or flash ROM. Refer to "Update procedure" or "writing procedure", when you should be write-in the software.

VERSION UPGRADE PROCEDURE OF FIRMWARE

1. Preparations before starting the operation

(1) Personal Computer (Installed “DFW_0002_NR1601_(Rev.1.0.6)”).

(2) RS-232 cable (9P (Male), Straight).

(3) 8U-210100 Writing Kit.

2. Connection of the AV receiver/amplifier

(1) Confirm the power on/off switch of the AV receiver/amplifier is turning off.

(2) Connect the update terminal of AV receiver/amplifier with the “Writing Kit”.

(3) Connect the RS-232C cable from PC with the “Writing Kit”.

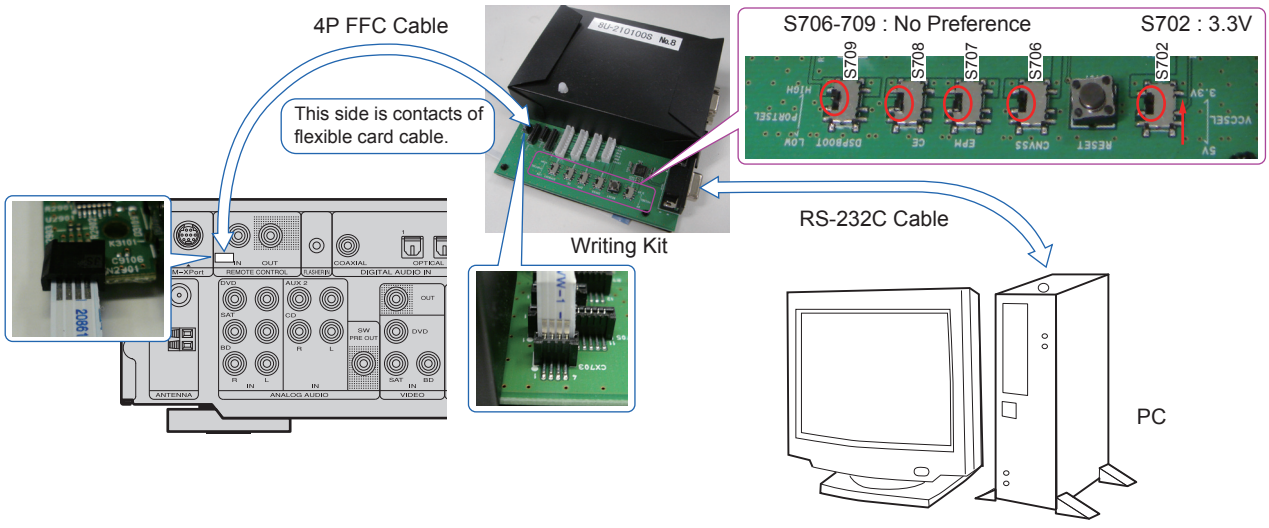

3. Turn on the AV receiver/amplifier

Operate the following. Turn on the AV receiver.

(1) Connect the power cable to the AC outlet while simultaneously pushing the "SURROUND MODE " button and the "RETURN" button of the front panel.

(2) Confirm the power indicator is green and “WRITTING” is displayed in the front panel.

4. Run the DFW

Run the “DFW_0002_NR1601_(Rev.1.0.6)” on desktop of PC.

5. Communication check

(1) Click the “Check Comm.” button.

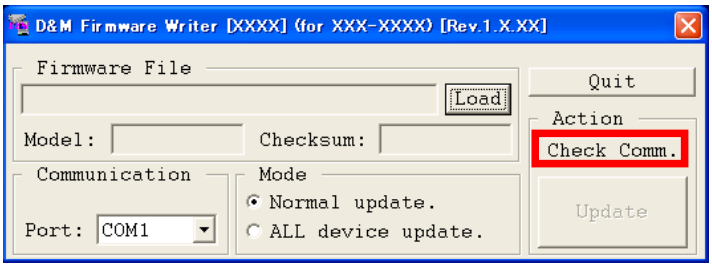

(2) When connection is good, then you can see the “Communication check OK.” message.

(3) If connection is not good, then you can see the “Communication check NG” message.

Please confirm the following

(a) Check the connection of the AV receiver/amplifier and PC. (refer to “2.Connection of the AV receiver/amplifier”)

(b) Check the operation mode of the AV receiver/amplifier. (refer to “3.Turn on the AV receiver/amplifier”)

(c) Check the selection of the RS-232C port number of PC.

6. Download the firmware

(1) Click the "Load" button.

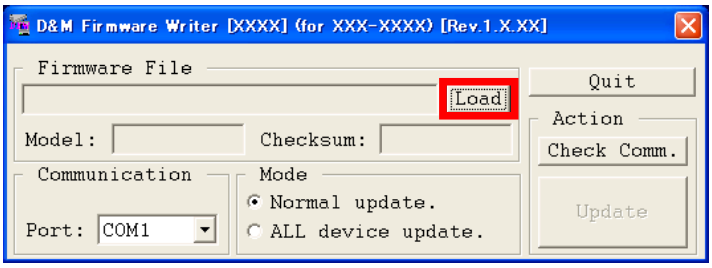

(2) Download the firmware from the specified download source to PC.

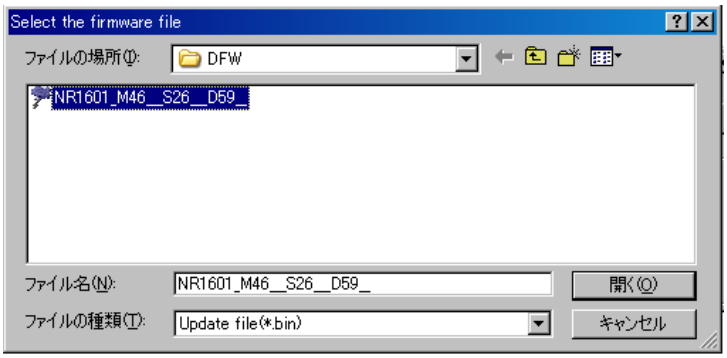

7. Complete the firmware updating

(1) Click the “Update” button.

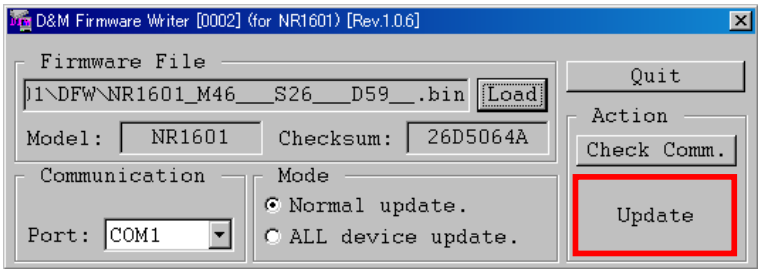

(2) When writing of the firmware is completed, the power of this unit turns on automatically and you can see the “Update completed” message.

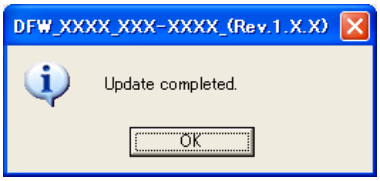

(3) If you can’t complete the firmware update, please retry the firmware update from “3. Turn on the AV receiver/ amplifier”.

8. Notice:

Please keep the following notice for firmware update.

(a) Keep the PC environment

(b) Avoid the communication cable from the electrical noise source.
(e.g. telephone cable, AC line, a fluorescent light)

(c) Don't remove cable during update.

(d) Don't turn off the power during update.

(e) Don't run other PC application during update.

(f) Stop the resident program on PC (Virus checker and System check utilitu, etc)

(g) Stop the screen saver on PC.

(h) Stop the power save ability on PC.

(i) In case of laptop PC, Use the AC adaptor.

Confirming the firmware's number after upgraded

After completion of the updating operation, the new version number can confirmed by starting up the NR1601 according to the following procedure.

With the following operation, the NR1601 can be set to the Flash ROM Version-Number Confiemation mode.

Turn on power switch while simultaneously pressing "SURROUND MODE" and "ENTER" buttons on the front panel.

Every time the "STATUS" button is pressed, version number of the Model, Main, Sub, … are indicated on the front panel section in the following order.

Depression	Button	Name	Remarks
1	STATUS	Model Name	NR1601_ _ * _ _ _ _ _ _ _
2	STATUS	Main CPU	_Main_ _ _ _ _ : * * . * *
3	STATUS	-	_Main_FBL_: * * . * *
4	STATUS	Sub CPU	_Sub: **.**
5	STATUS	-	_Sub_FBL_ _ : * * . * *
6	STATUS	DSP ROM	_DSP_ _ _ _ _ _ : * * . * *
7	STATUS	Audio PLD	_A_PLD : _ A * * * * * * *
8	STATUS	USB ROM	_USB_ _ _ _ _ _ _ _ _ : * * *

Symbols in the table

○ This indicates the audio output channels or surround parameters that can be set.
◎ This indicates the audio output channels. The output channels depend on the settings of "Speaker Config.".

Surround mode	Channel output						Surround Parameter			
	Front L/R	Center	Surround L/R	Surround Back L/R	Front Height L/R	Subwoofer	HT-EQ. ∗3	DRC ∗4	D. Comp ∗5	LFE ∗6
DIRECT (2channel)	○					◎∗2		○	○	
DIRECT (Multi-channel)	○	◎	◎	◎∗1	◎∗1	◎		○	○	○
STEREO	○					◎		○	○	○
MULTI CH IN	○	◎	◎	◎	◎	◎	○			○
DOLBY PRO LOGIC IIz	○	◎	◎		◎	◎	○	○	○	
DOLBY PRO LOGIC IIx	○	◎	◎	◎		◎	○	○	○	
DOLBY PRO LOGIC II	○	◎	◎			◎	○	○	○	
DTS NEO:6	○	◎	◎	◎		◎	○	○	○	
DOLBY DIGITAL	○	◎	◎	◎	◎	◎	○		○	○
DOLBY DIGITAL Plus	○	◎	◎	◎	◎	◎	○		○	○
DOLBY TrueHD	○	◎	◎	◎	◎	◎	○	○		○
DTS SURROUND	○	◎	◎	◎	◎	◎	○		○	○
DTS 96/24	○	◎	◎	◎	◎	◎	○		○	○
DTS-HD	○	◎	◎	◎	◎	◎	○		○	○
DTS Express	○	◎	◎	◎	◎	◎	○		○	○
MULTI CH STEREO	○	◎	◎	◎	◎	◎			○	○
DOLBY VIRTUAL SPEAKR	○					◎∗2			○	○
Neural	○	◎	◎		◎	◎	○	○	○	
Dolby Headphone	○							○	○	○

∗1 A signal for each channel contained in an input signal is output as audio.
∗2 Only when "Subwoofer Mode" is set to "LFE+Main"-, sound is output from the subwoofer.
∗3 For HD Audio whose sampling frequency of an input signal is more than 96kHz, this sound parameter cannot be set.
∗4 This item can be selected when a Dolby TrueHD signal is played.
∗5 This item can be selected when a Dolby Digital or DTS signal is played.
∗6 This item can be selected when a Dolby Digital or DTS signal or DVD-Audio is played.

Surround mode	Surround Parameter					Tone ＊7	Audyssey Settings ＊11			M-DAX ＊10
	Height Gain	Panorama	Dimension	Center Width	Center Image		MultEQ®	Dynamic EQ® ＊8	Dynamic Volume® ＊9	
DIRECT (2 channel)										
DIRECT (Multi-channel)										
STEREO						○	○	○	○	○
MULTI CH IN						○	○	○	○	
DOLBY PRO LOGIC IIz	○					○	○	○	○	○
DOLBY PRO LOGIC IIx		○	○	○		○	○	○	○	○
DOLBY PRO LOGIC II		○	○	○		○	○	○	○	○
DTS NEO:6					○	○	○	○	○	○
DOLBY DIGITAL						○	○	○	○	
DOLBY DIGITAL Plus						○	○	○	○	
DOLBY TrueHD						○	○	○	○	
DTS SURROUND						○	○	○	○	
DTS 96/24						○	○	○	○	
DTS-HD						○	○	○	○	
DTS Express						○	○	○	○	
MULTI CH STEREO						○	○	○	○	○
DOLBY VIRTUAL SPEAKER						○	○	○	○	○
Neural						○	○	○	○	○
Dolby Headphone						○				○

＊7 This item cannot be set when “Dynamic EQ” is set to “ON”.
＊8 This item cannot be set when “MultEQ” is set to “OFF” or “Manual”.
＊9 This item cannot be set when “Dynamic EQ” is set to “OFF”.
＊10 This item can be set when the input signal is analog, PCM 48 kHz or 44.1 kHz.
＊11 For HD Audio whose sampling frequency of an input signal is more than 96 kHz, this sound parameter cannot be set.

Symbols in the table

○ This indicates the selectable surround mode.

Surround mode	NOTE	Input signal types and formats															
		ANALOG	PCM		DTS-HD		DTS					DOLBY		DOLBY DIGITAL			
			LINEAR PCM (multi ch)	LINEAR PCM (2ch)	DTS-HD Master Audio	DTS-HD High Resolution Audio	DTS EXPRESS	DTS ES DSCRT (With Flag)	DTS ES MTRX (With Flag)	DTS (5.1ch)	DTS 96/24	DOLBY TrueHD	DOLBY DIGITAL Plus	DOLBY DIGITAL EX (With Flag)	DOLBY DIGITAL EX (With no Flag)	DOLBY DIGITAL (5.1/5/4ch)	DOLBY DIGITAL (2ch)
DTS SURROUND																	
DTS-HD MSTR					○												
DTS-HD HI RES						○											
DTS ES DSCRT6.1	＊1							○									
DTS ES MTRX6.1	＊1								○								
DTS SURROUND								○	○	○							
DTS 96/24											○						
DTS (–HD) + PLⅡx MOVIE	＊2				○	○	○	○	○	○	○						
DTS (–HD) + PLⅡx MUSIC	＊1				○	○	○	○	○	○	○						
DTS (–HD) + PLⅡz	＊3				○	○	○	○	○	○	○						
DTS EXPRESS							○										
DTS (–HD) + NEO:6	＊1				○	○	○		○	○	○						
DTS NEO:6 CINEMA		○		○													○
DTS NEO:6 MUSIC		○		○													○
DOLBY SURROUND																	
DOLBY TrueHD												○					
DOLBY DIGITAL+													○				
DOLBY DIGITAL EX	＊1													○	○	○	
DOLBY (D+) (HD) +EX	＊1											○	○				
DOLBY DIGITAL														○	○	○	
DOLBY (D) (D+) (HD) +PLⅡx MOVIE	＊2											○	○	○	○	○	
DOLBY (D) (D+) (HD) +PLⅡx MUSIC	＊1											○	○	○	○	○	
DOLBY (D) (D+) (HD) +PLⅡz	＊4											○	○	○	○	○	
DOLBY PRO LOGIC Ⅱx MOVIE	＊1	○		○													○
DOLBY PRO LOGIC Ⅱx MUSIC	＊1	○		○													○
DOLBY PRO LOGIC Ⅱx GAME	＊1	○		○													○
DOLBY PRO LOGIC Ⅱz	＊3	○		○													○
DOLBY PRO LOGIC Ⅱ MOVIE		○		○													○
DOLBY PRO LOGIC Ⅱ MUSIC		○		○													○
DOLBY PRO LOGIC Ⅱ GAME		○		○													○

＊1 If “Speaker Config.” – “S.Back” is set to “None”, this surround mode cannot be selected.
＊2 If “Speaker Config.” – “S.Back” is set to “1sp” or “None”, this surround mode cannot be selected.
＊3 If “Speaker Config.” – “Front Height” is set to “None”, this surround mode cannot be selected.

Surround mode	NOTE	Input signal types and formats																
		ANALOG	PCM		DTS-HD		DTS					DOLBY		DOLBY DIGITAL				
			LINEAR PCM (multi ch)	LINEAR PCM (2ch)	DTS-HD Master Audio	DTS-HD High Resolution Audio	DTS EXPRESS	DTS ES DSCRT (With Flag)	DTS ES MTRX (With Flag)	DTS (5.1ch)	DTS 96/24	DOLBY TrueHD	DOLBY DIGITAL Plus	DOLBY DIGITAL EX (With Flag)	DOLBY DIGITAL EX (With no Flag)	DOLBY DIGITAL (5.1/5/4ch)	DOLBY DIGITAL (2ch)
MULTI CH IN																		
MULTI CH IN			○															
MULTI CH IN + PLⅡx MOVIE	＊2		○															
MULTI CH IN + PLⅡx MUSIC	＊1		○															
MULTI CH IN + PLⅡz	＊3		○															
MULTI CH IN + Dolby EX	＊1		○															
MULTI CH IN 7.1			○															
DIRECT		○	○	○	○	○	○	○	○	○	○	○	○	○	○	○	○	
MULTI CH STEREO		○	○	○				○	○	○	○			○	○	○	○	
DOLBY VIRTUAL SPEAKER		○	○	○	○	○	○	○	○	○	○	○	○	○	○	○	○	
NEURAL		○		○														
DOLBY HEADPHONE		○	○	○	○	○	○	○	○	○	○	○	○	○	○	○	○	

＊1 If “Speaker Config.” – “S.Back” is set to “None”, this surround mode cannot be selected.
＊2 If “Speaker Config.” – “S.Back” is set to “1sp” or “None”, this surround mode cannot be selected.
＊3 If “Speaker Config.” – “Front Height” is set to “None”, this surround mode cannot be selected.

ADJUSTMENT

Audio Section

Idling Current

Required measurement equipment: DC Voltmeter

1. Preparation

(1) Avoid direct blow from an air conditioner or an electric fan, and adjust the unit at normal room temperature 15 °C ~ 30 °C (59 °F ~ 86 °F).

(2) Presetting
- POWER (Power source switch) STANDBY
- SPEAKER (Speaker terminal) No load
  (Do not connect speaker, dummy resistor, etc.)

2. Adjustment

(1) Remove top cover and set VR401, VR402, VR403, VR404, VR405, VR406, VR407 on 7CH AMP UNIT at fully counterclockwise (↺) position.

(2) Connect DC Voltmeter to test points (FRONT-Lch: TP401, FRONT-Rch: TP402, CENTER ch: TP403, SURROUND-Lch: TP404, SURROUND-Rch: TP405, SURROUND-BACK Lch: TP406, SURROUND-BACK Rch: TP407).

(3) Connect power cord to AC Line, and turn power switch "ON".

(4) Presetting.
MASTER VOLUME : "---" counterclockwise (↺ min.)
SPEAKER (Speaker terminal) : No load
(Do not connect speaker, dummy resistor, etc.)
MODE : MCH STEREO
FUNCTION : DVD

(5) Within 2 minutes after the power on, turn VR401 clockwise (↻) to adjust the TEST POINT voltage to 2.0 mV ± 0.5 mV DC.

(6) After 10 minutes from the preset above, turn VR401 to set the voltage to 3.0 mV ± 0.5 mV DC.

(7) Adjust the Variable Resistors of other channels in the same way.

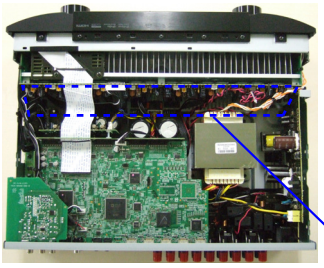

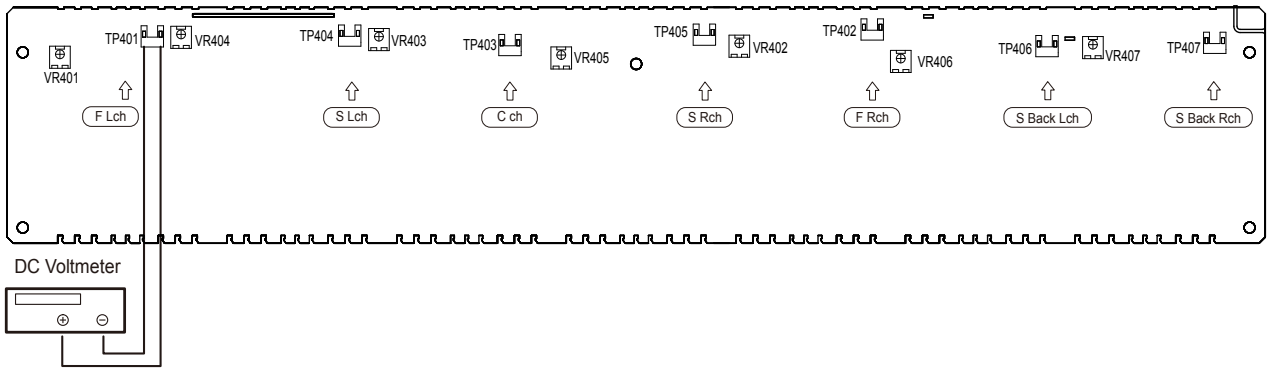

TROUBLE SHOOTING

1. POWER

1.1. Power not turn on

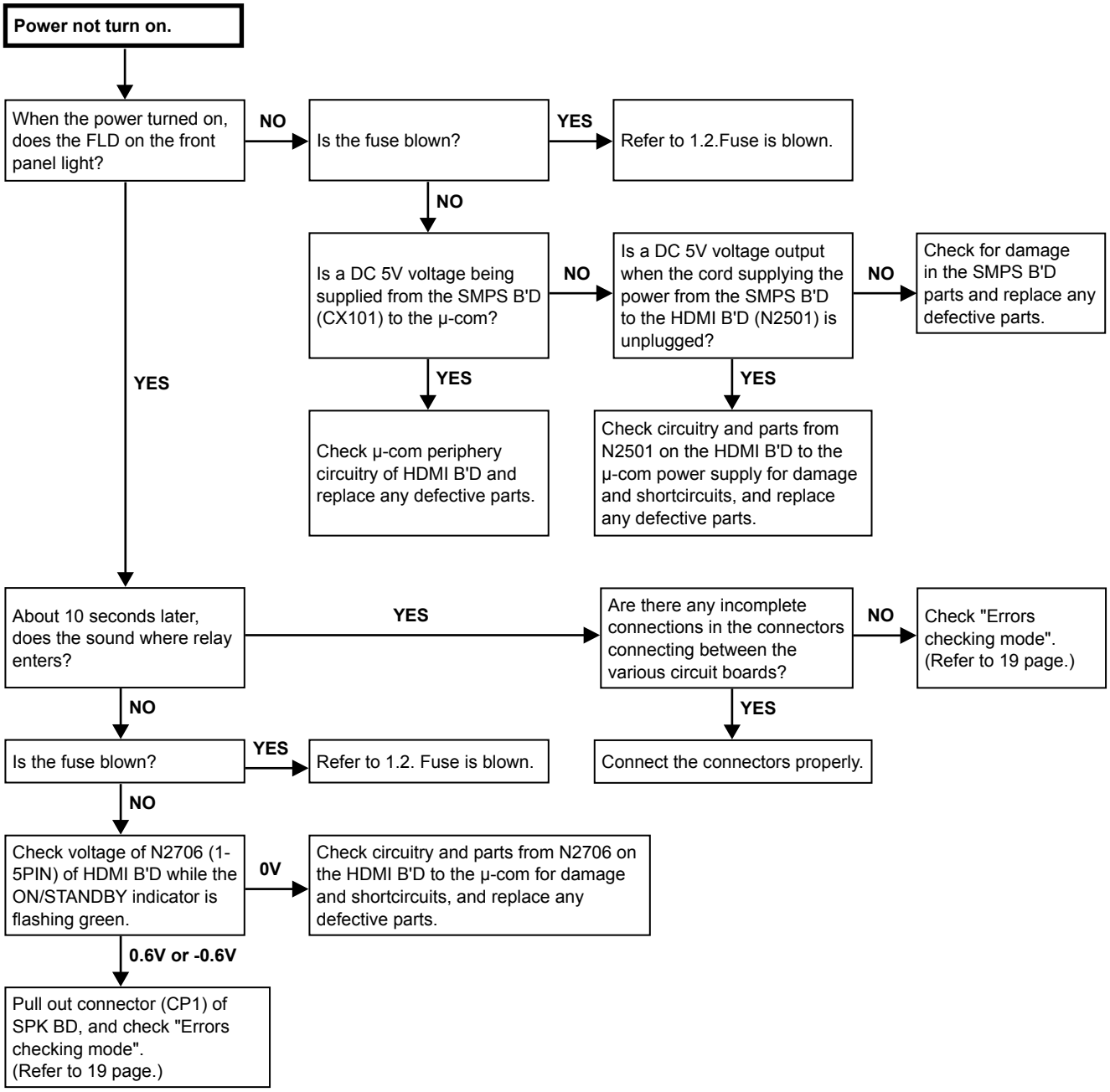

1.2. Fuse is blown

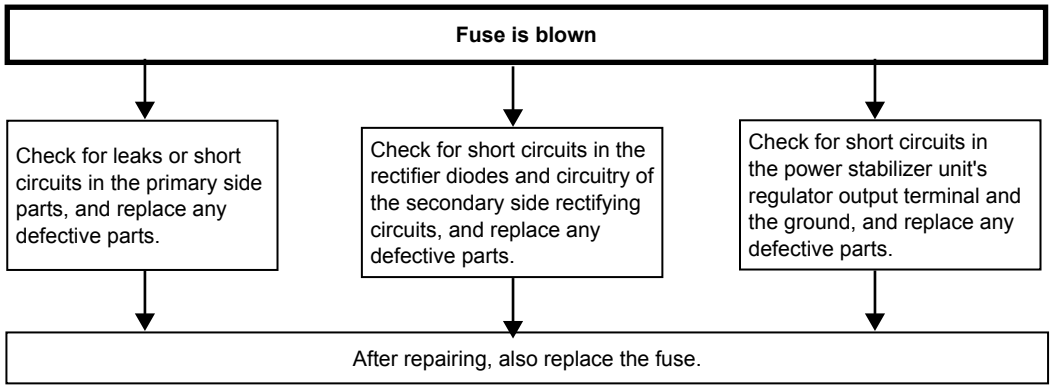

2. Analog video

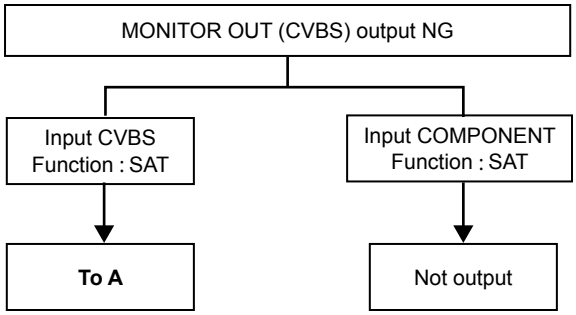

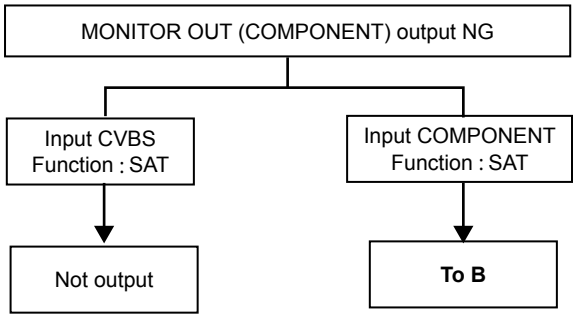

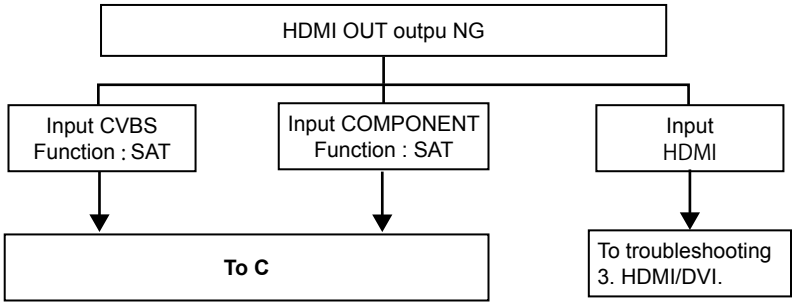

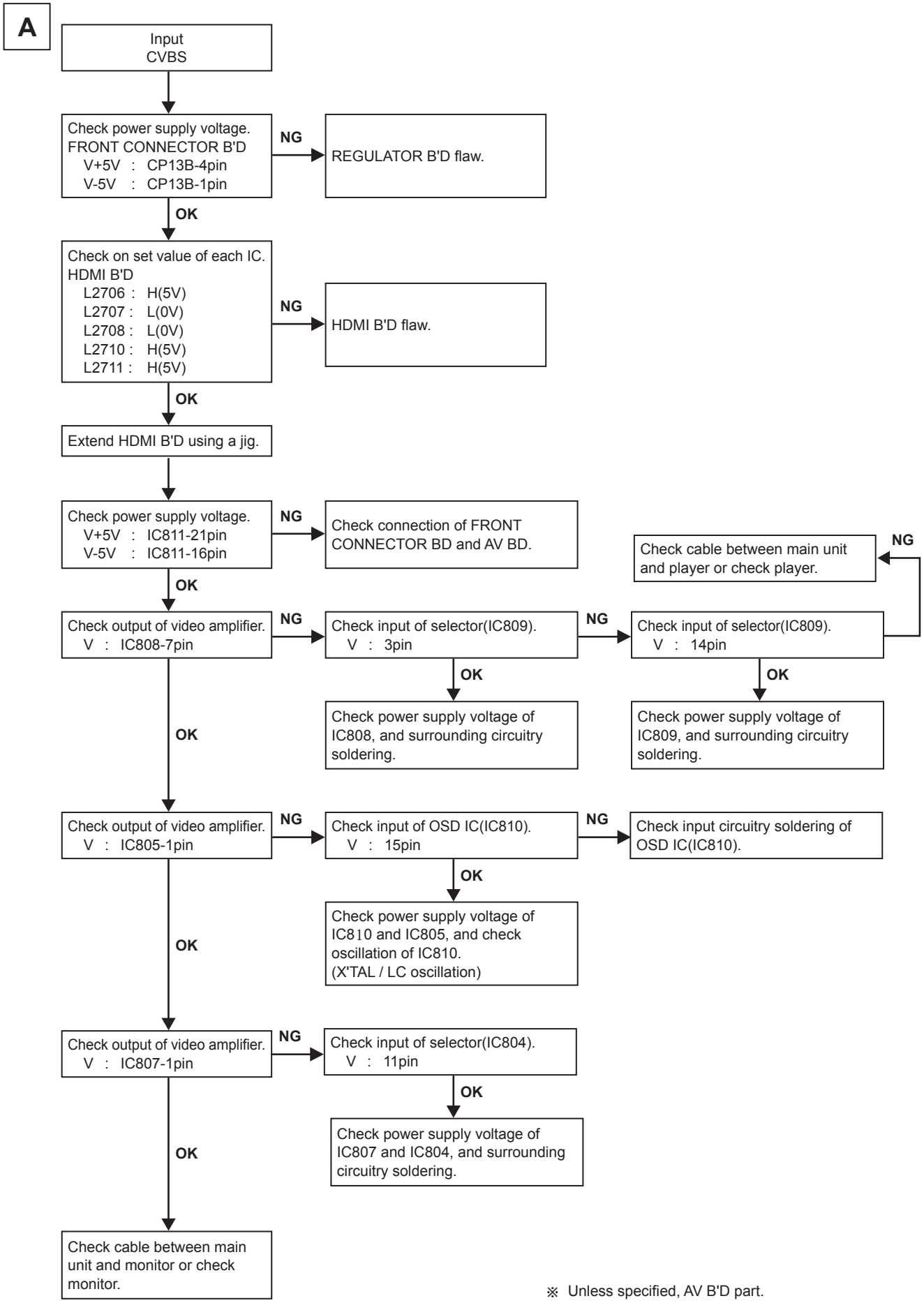

※ Unless specified, AV B'D part.

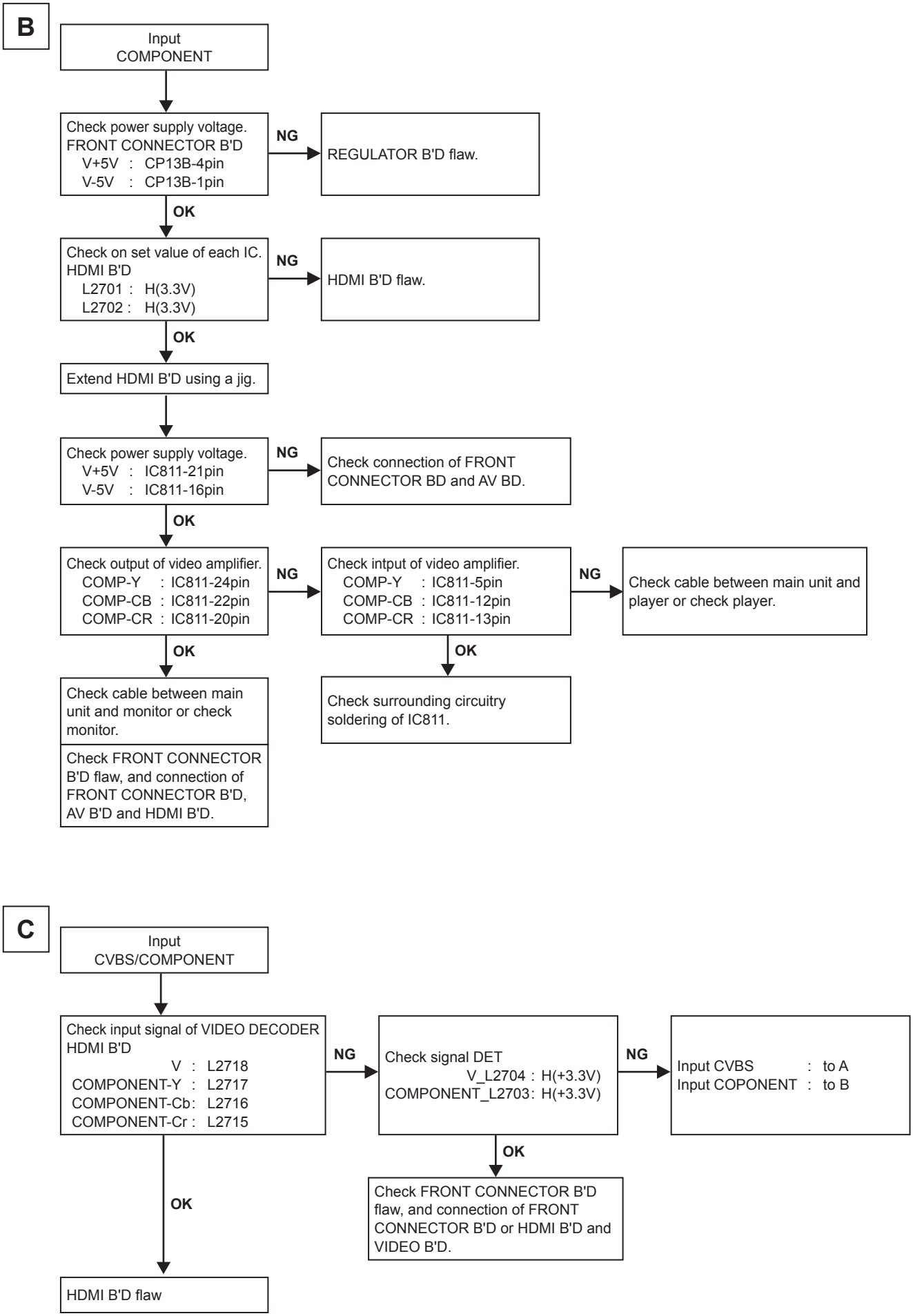

※ Unless specified, AV B'D part.

3. HDMI/DVI

3.1. No picture or sound is output

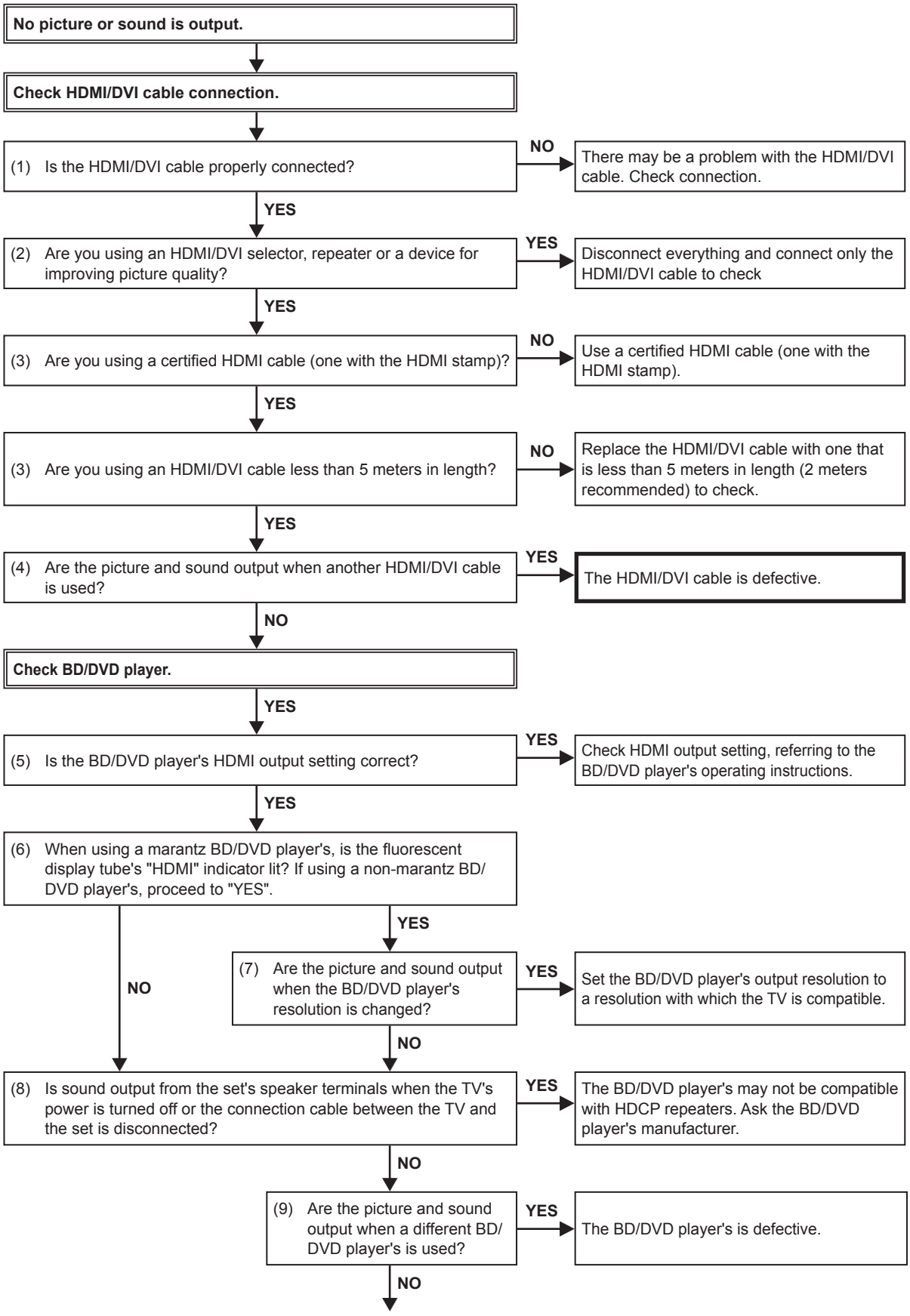

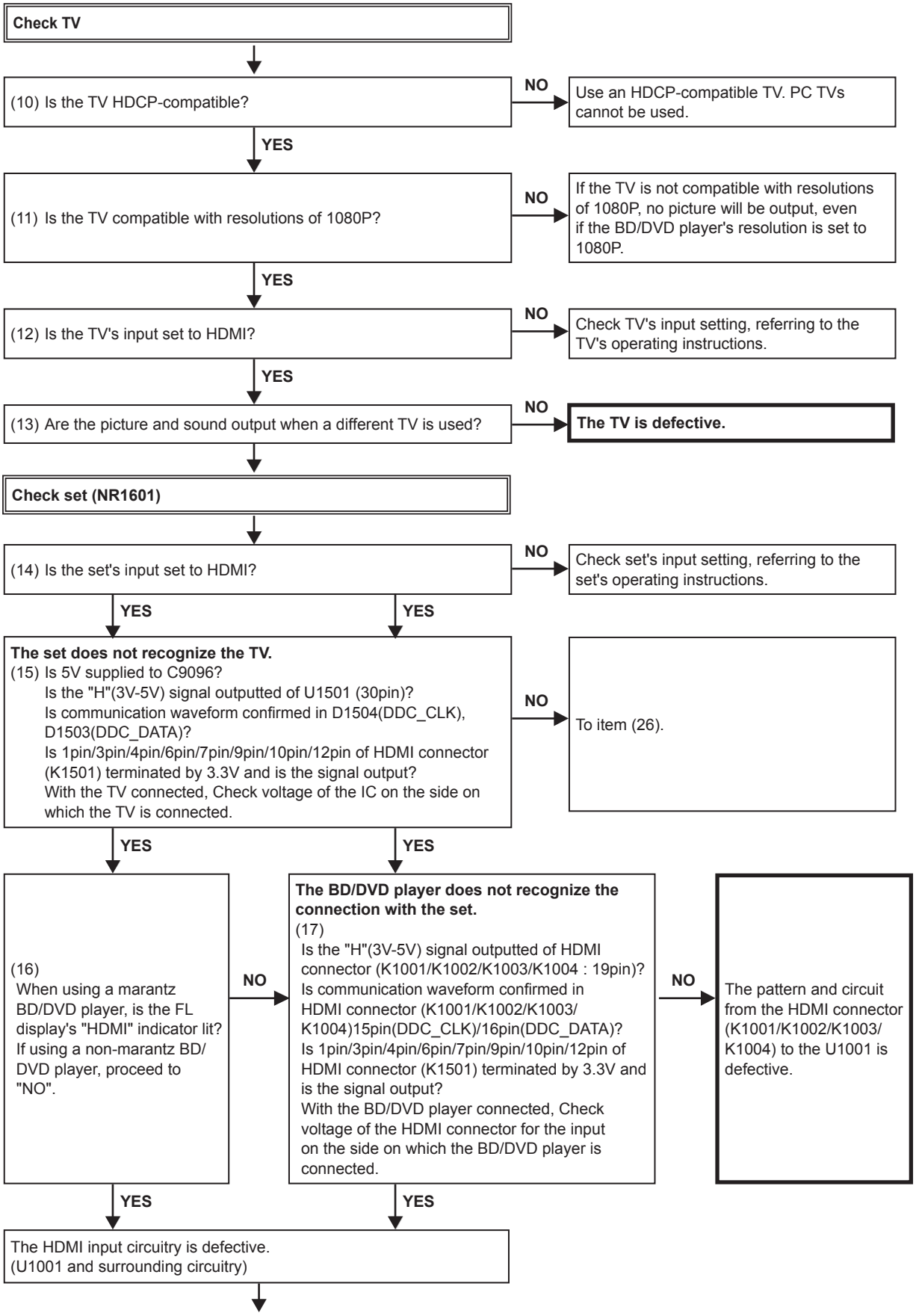
Check TV
(10) Is the TV HDCP-compatible?
NO
Use an HDCP-compatible TV. PC TVs cannot be used.
YES
(11) Is the TV compatible with resolutions of 1080P?
NO
If the TV is not compatible with resolutions of 1080P, no picture will be output, even if the BD/DVD player's resolution is set to 1080P.
YES
(12) Is the TV's input set to HDMI?
NO
Check TV's input setting, referring to the TV's operating instructions.
YES
(13) Are the picture and sound output when a different TV is used?
NO
The TV is defective.
Check set (NR1601)
(14) Is the set's input set to HDMI?
NO
Check set's input setting, referring to the set's operating instructions.
YES
YES
The set does not recognize the TV.
(15) Is 5V supplied to C9096?
Is the "H"(3V-5V) signal outputted of U1501 (30pin)?
Is communication waveform confirmed in D1504(DDC_CLK), D1503(DDC_DATA)?
Is 1pin/3pin/4pin/6pin/7pin/9pin/10pin/12pin of HDMI connector (K1501) terminated by 3.3V and is the signal output?
With the TV connected, Check voltage of the IC on the side on which the TV is connected.
NO
To item (26).
YES
YES
(16)
When using a marantz BD/DVD player, is the FL display's "HDMI" indicator lit?
If using a non-marantz BD/DVD player, proceed to "NO".
NO
The BD/DVD player does not recognize the connection with the set.
(17)
Is the "H"(3V-5V) signal outputted of HDMI connector (K1001/K1002/K1003/K1004 : 19pin)?
Is communication waveform confirmed in HDMI connector (K1001/K1002/K1003/K1004)15pin(DDC_CLK)/16pin(DDC_DATA)?
Is 1pin/3pin/4pin/6pin/7pin/9pin/10pin/12pin of HDMI connector (K1501) terminated by 3.3V and is the signal output?
With the BD/DVD player connected, Check voltage of the HDMI connector for the input on the side on which the BD/DVD player is connected.
NO
The pattern and circuit from the HDMI connector (K1001/K1002/K1003/K1004) to the U1001 is defective.
YES
YES
The HDMI input circuitry is defective.
(U1001 and surrounding circuitry)

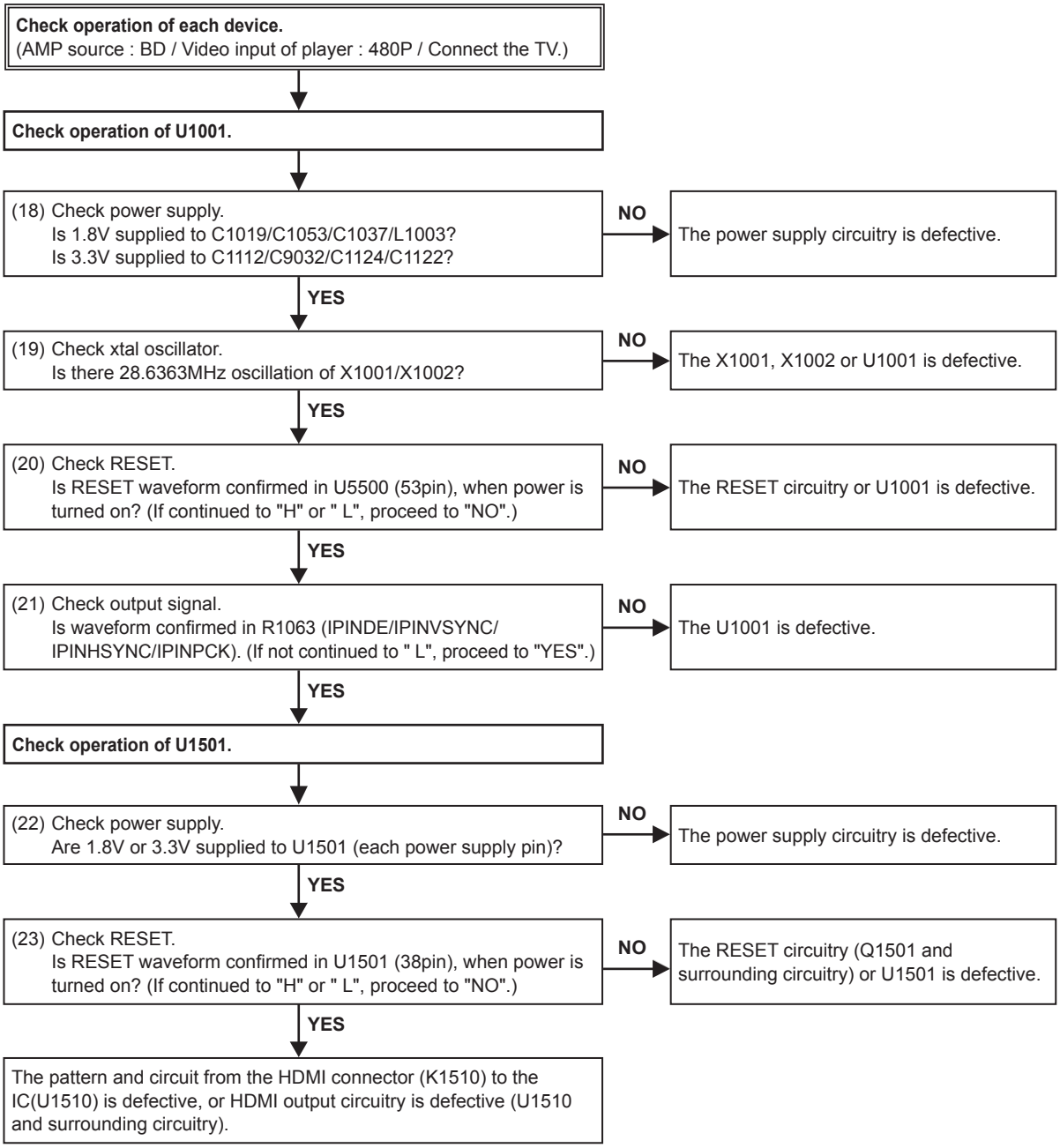
Check operation of each device.
(AMP source : BD / Video input of player : 480P / Connect the TV.)
Check operation of U1001.
(18) Check power supply.
Is 1.8V supplied to C1019/C1053/C1037/L1003?
Is 3.3V supplied to C1112/C9032/C1124/C1122?
NO
The power supply circuitry is defective.
YES
(19) Check xtal oscillator.
Is there 28.6363MHz oscillation of X1001/X1002?
NO
The X1001, X1002 or U1001 is defective.
YES
(20) Check RESET.
Is RESET waveform confirmed in U5500 (53pin), when power is turned on? (If continued to "H" or " L", proceed to "NO".)
NO
The RESET circuitry or U1001 is defective.
YES
(21) Check output signal.
Is waveform confirmed in R1063 (IPINDE/IPINVSYNC/ IPINHSYNC/IPINPCK). (If not continued to " L", proceed to "YES".)
NO
The U1001 is defective.
YES
Check operation of U1501.
(22) Check power supply.
Are 1.8V or 3.3V supplied to U1501 (each power supply pin)?
NO
The power supply circuitry is defective.
YES
(23) Check RESET.
Is RESET waveform confirmed in U1501 (38pin), when power is turned on? (If continued to "H" or " L", proceed to "NO".)
NO
The RESET circuitry (Q1501 and surrounding circuitry) or U1501 is defective.
YES
The pattern and circuit from the HDMI connector (K1510) to the IC(U1510) is defective, or HDMI output circuitry is defective (U1510 and surrounding circuitry).

3.2. HDMI test point and waveforms

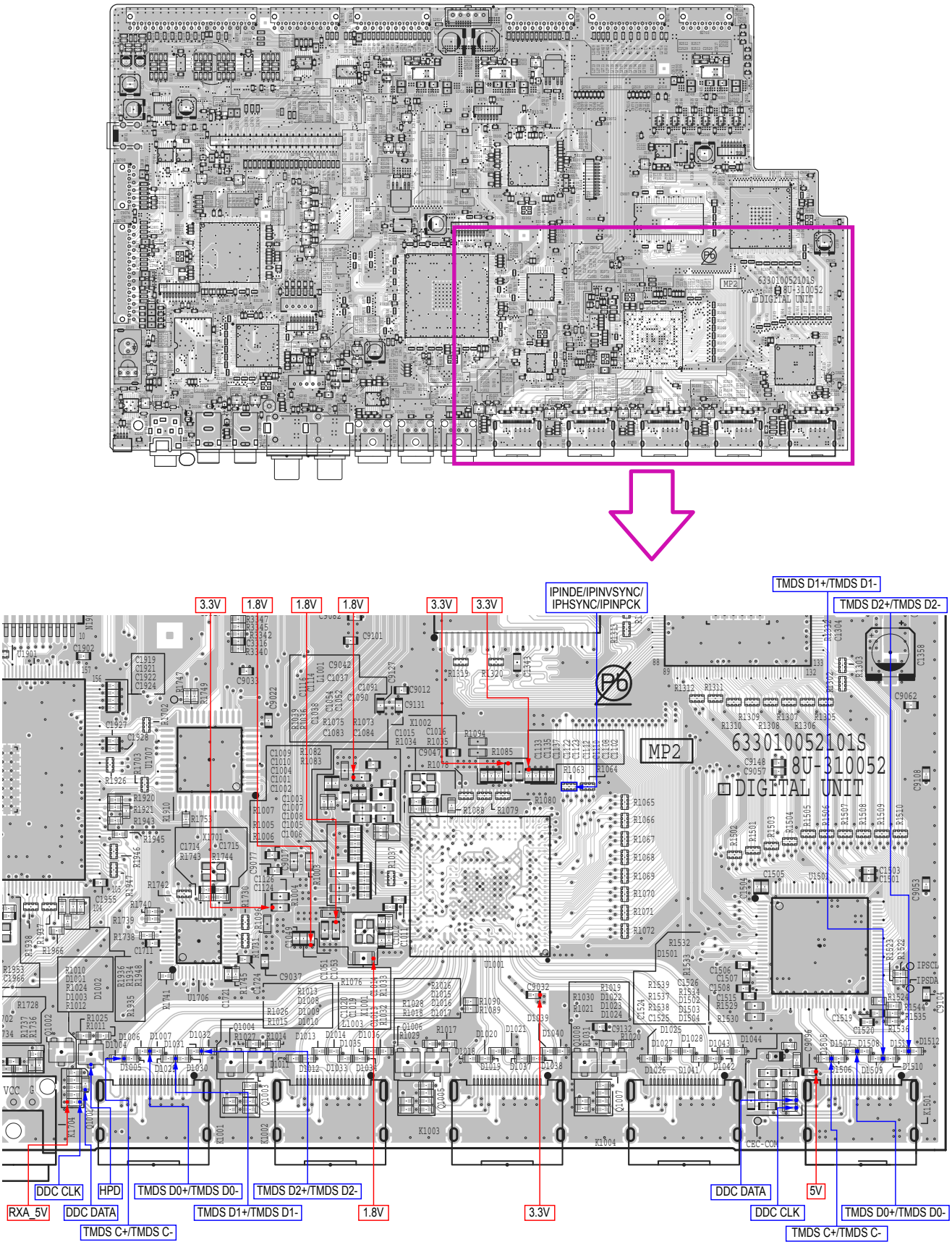

DDC_CLK/DDC_DATA/TMDS(1,3,4,6,7,9,10,12pin) : Check item (15),(17)

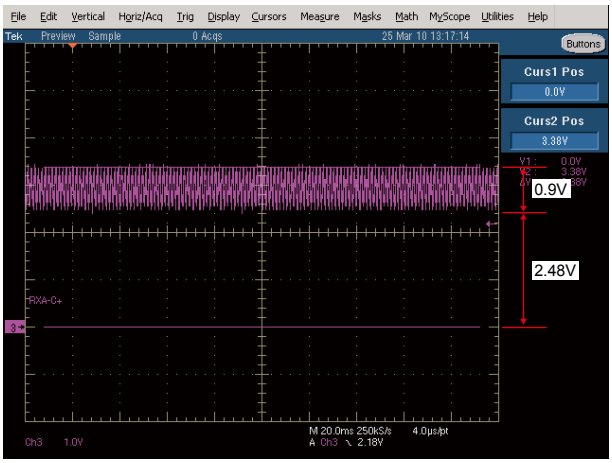

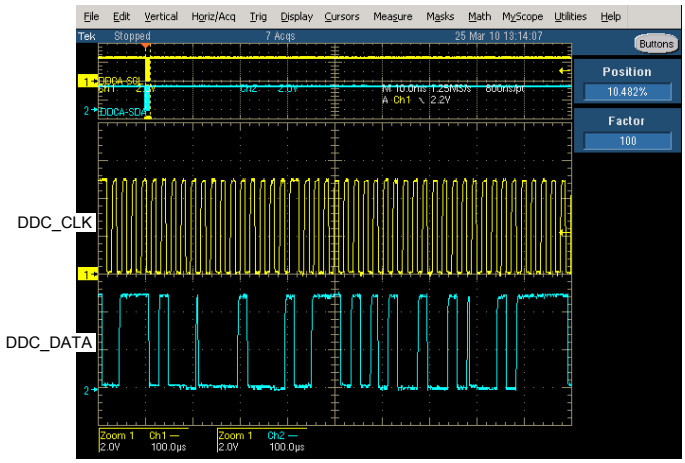

IPINDE/IPINVSYNC/IPINHSYNC/IPINPCK : Check item (21)

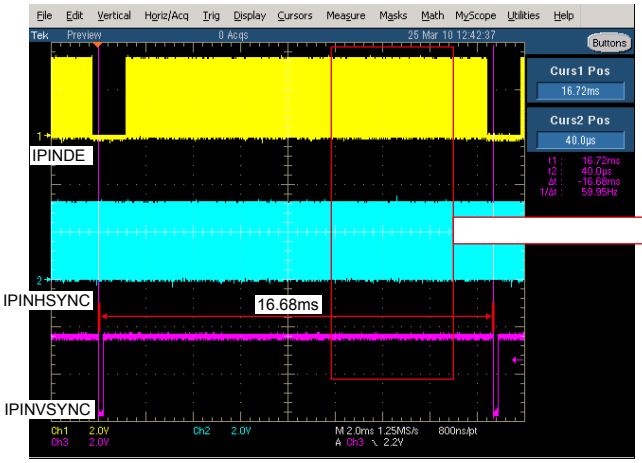

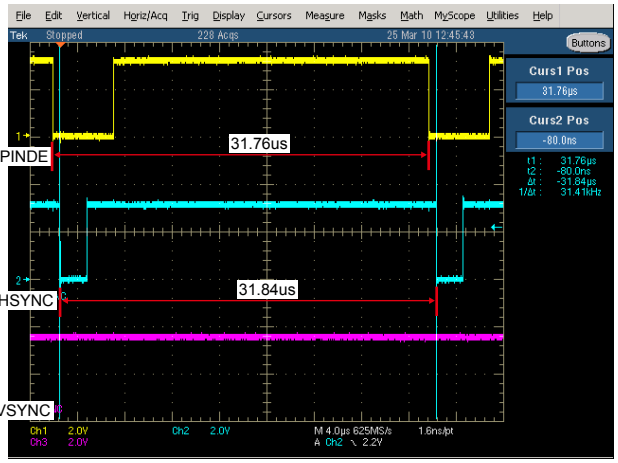

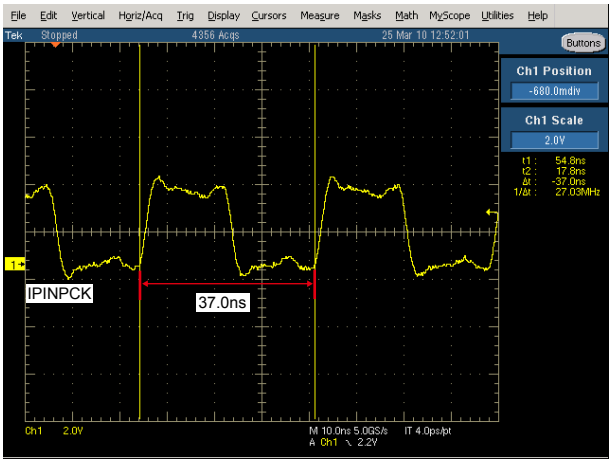

4. AUDIO

4.1. AUDIO CHECK

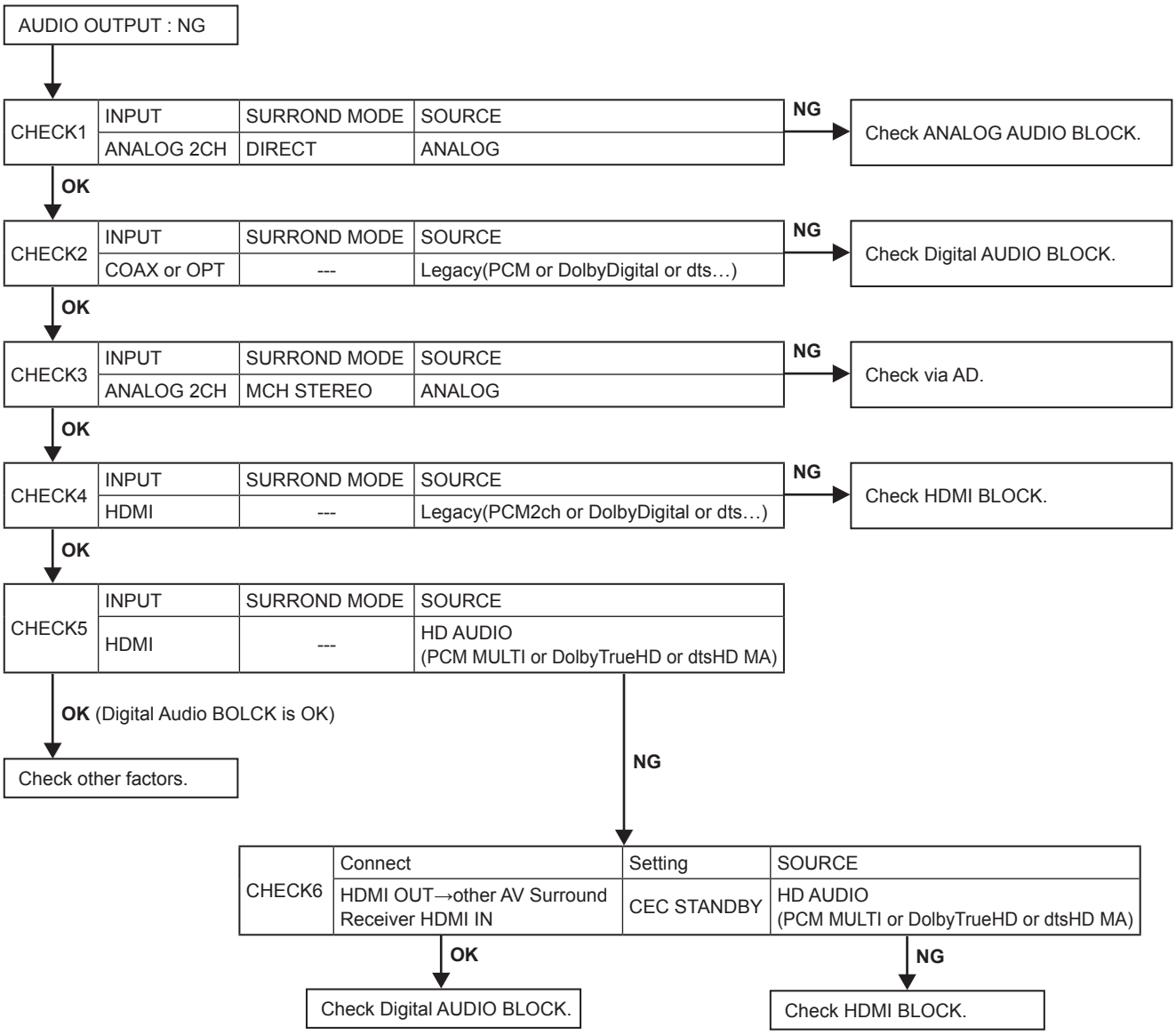

4.2. Power AMP (AMP B'D)

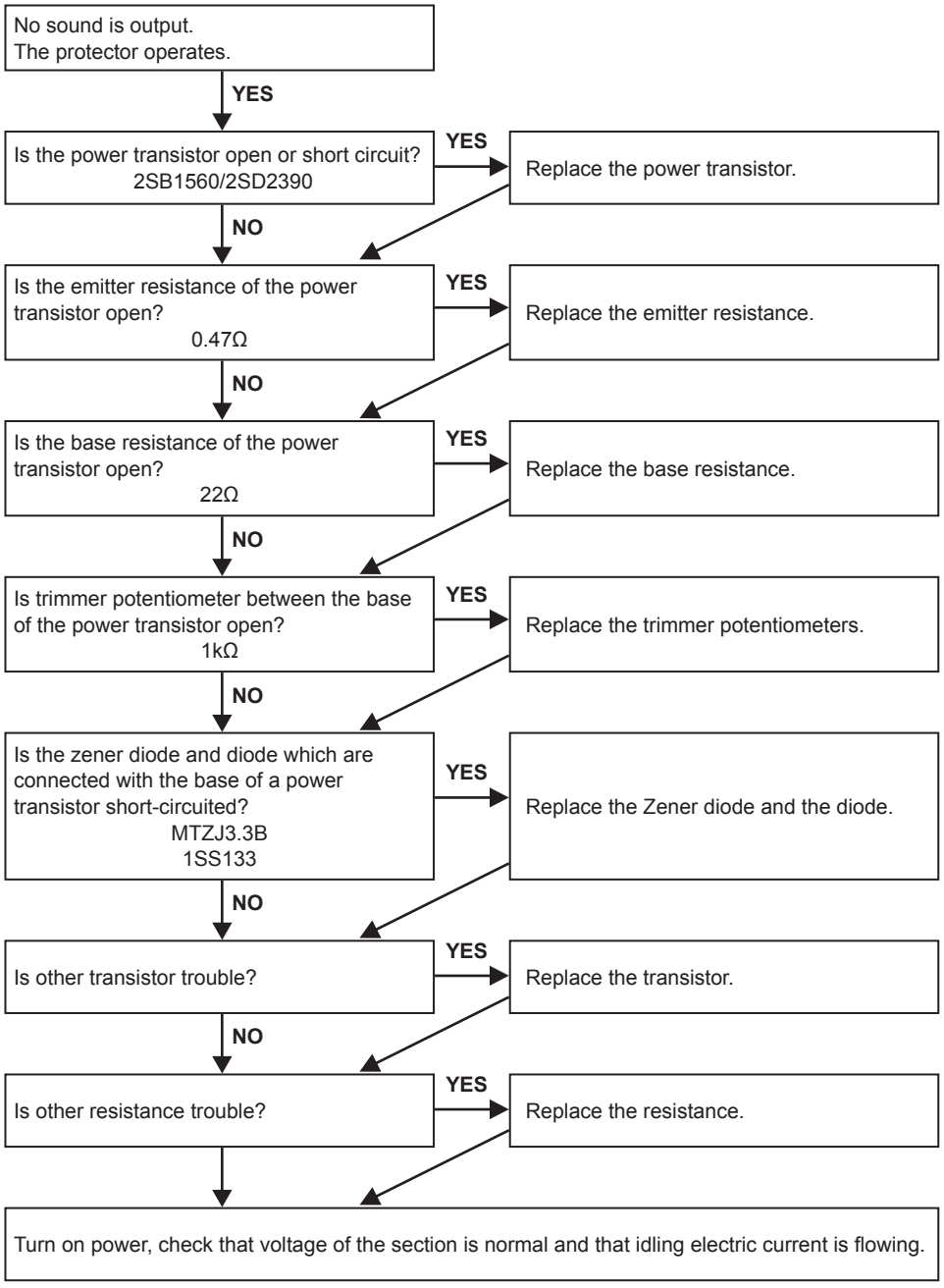

4.3. Analog audio

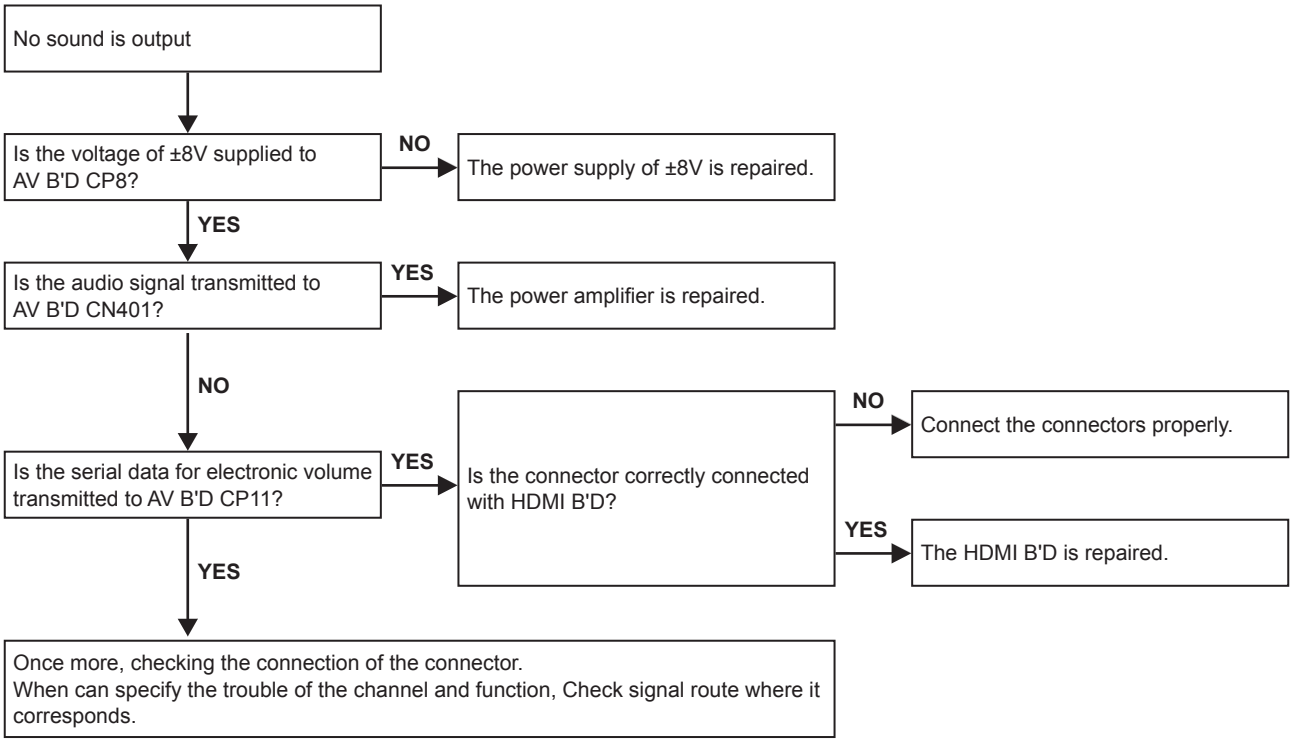

CLOCK FLOW & WAVE FORM IN DIGITAL BLOCK

Wave form

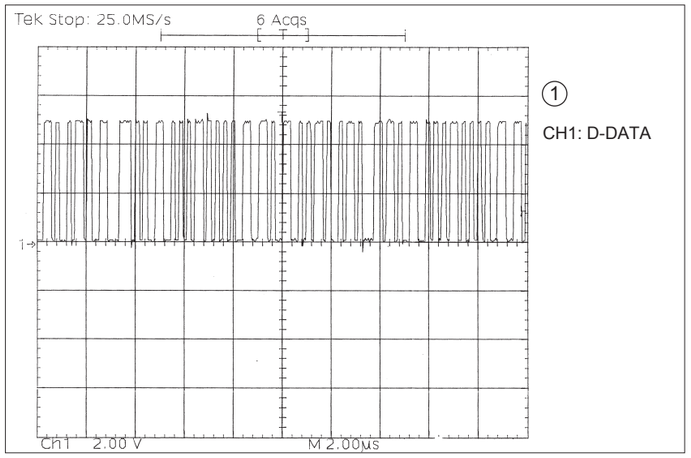

① CH1: D-DATA

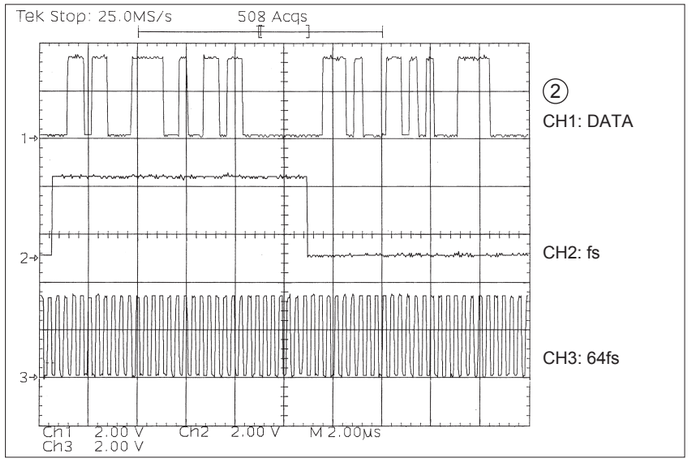

② CH1: DATA

CH2: fs

CH3: 64fs

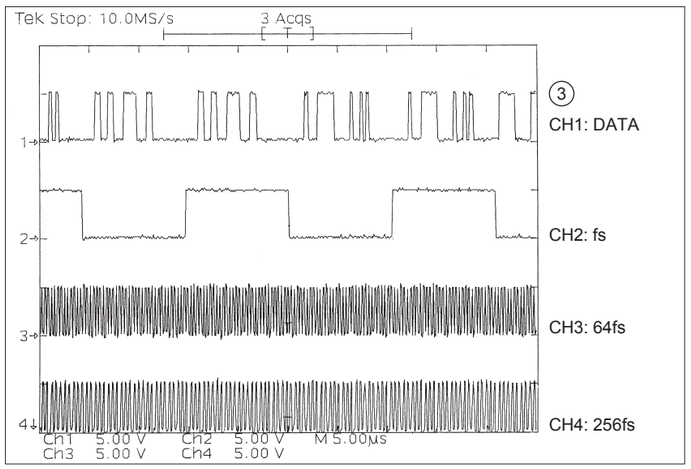

③ CH1: DATA

CH2: fs

CH3: 64fs

CH4: 256fs

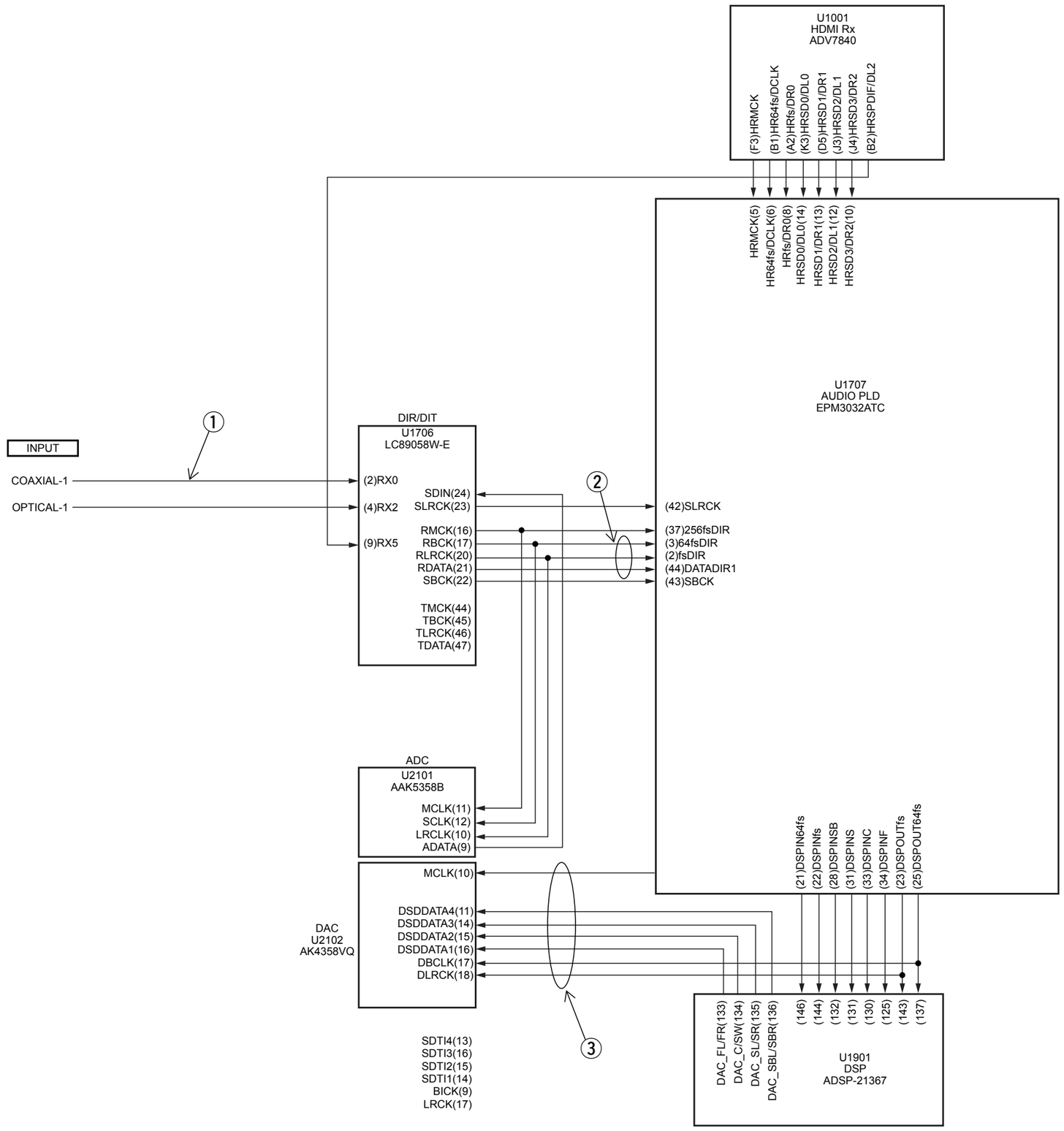

BLOCK DIAGRAM

AUDIO BLOCK DIAGRAM

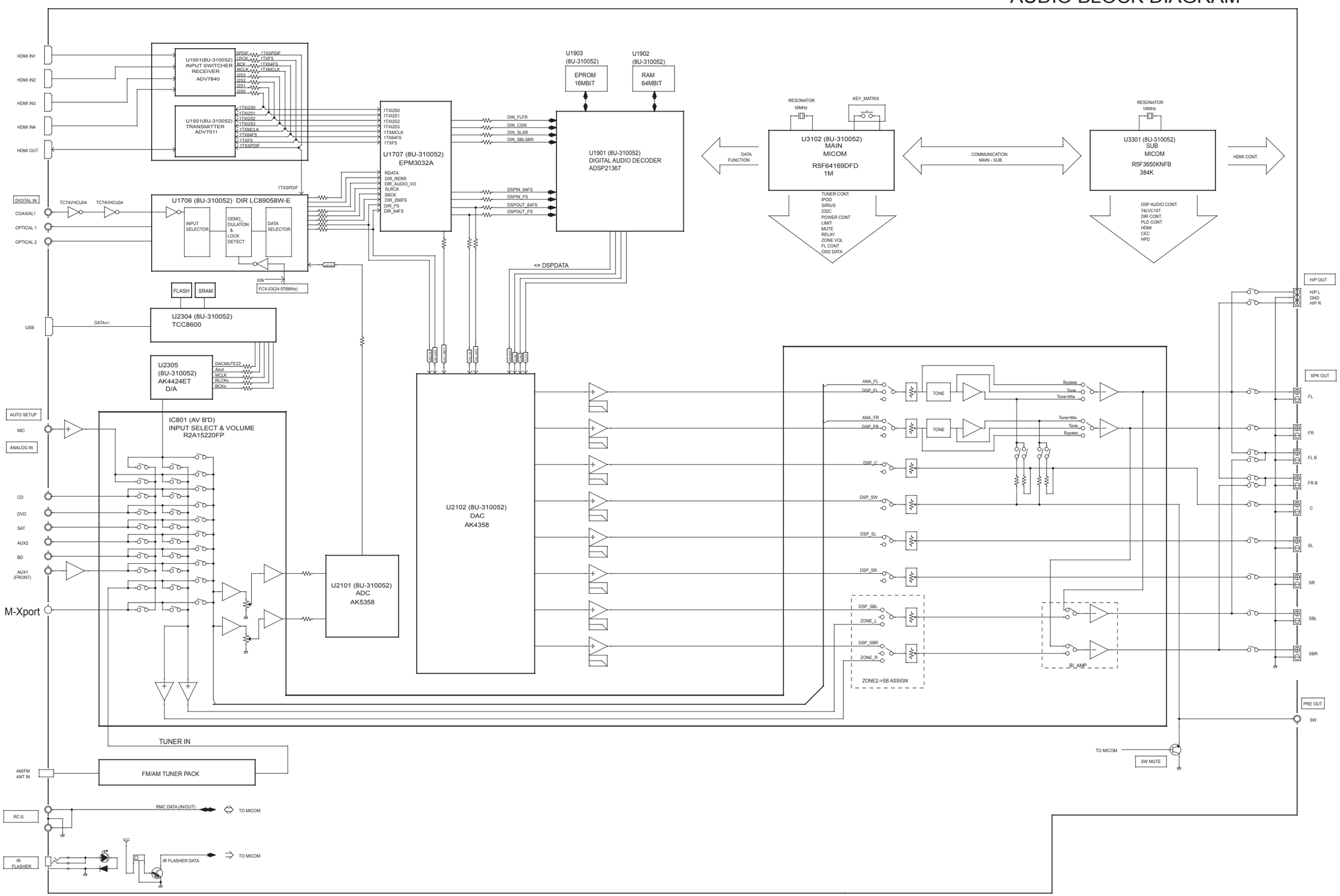

VIDEO BLOCK DIAGRAM

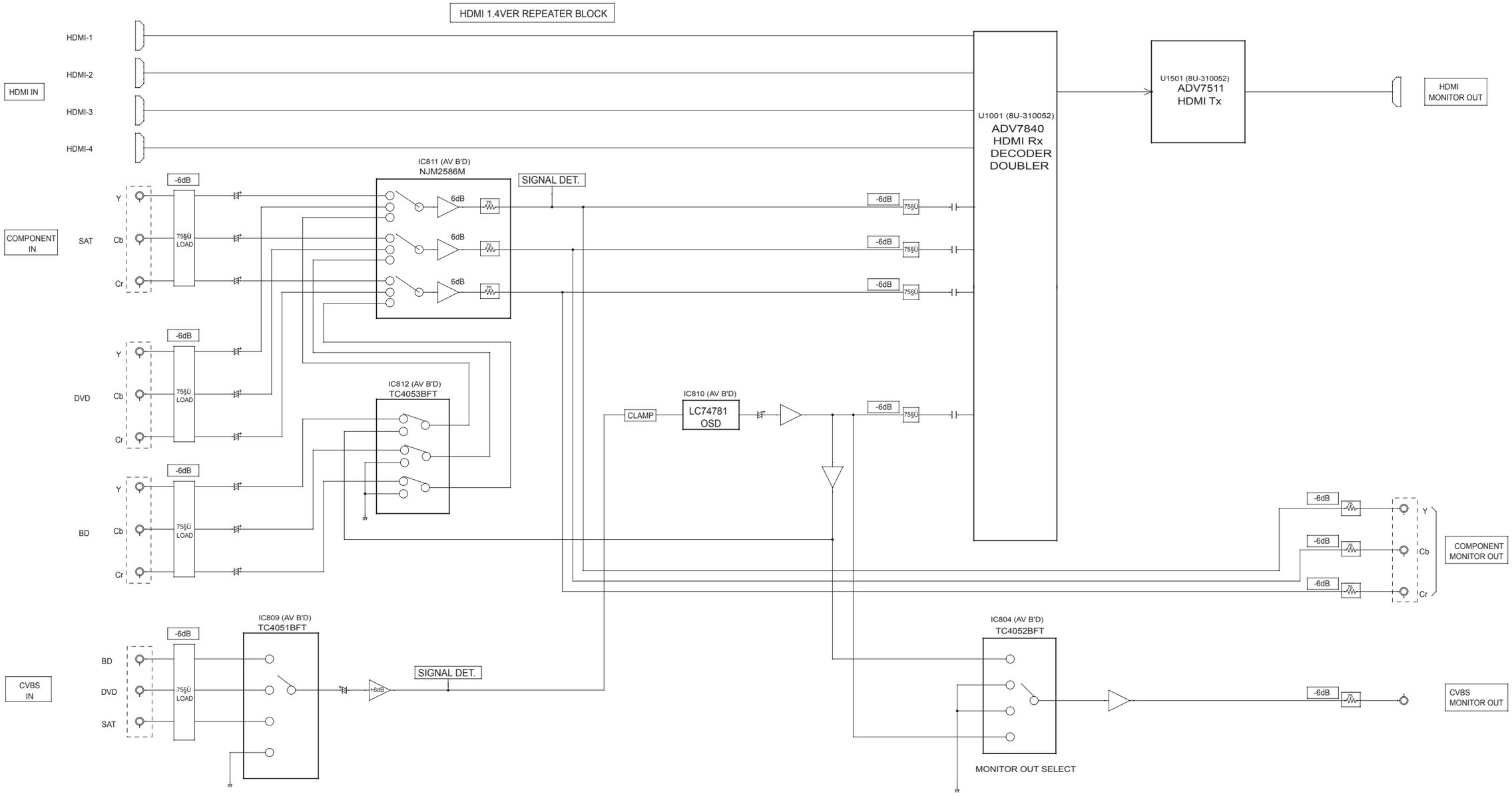

VCC BLOCK DIAGRAM

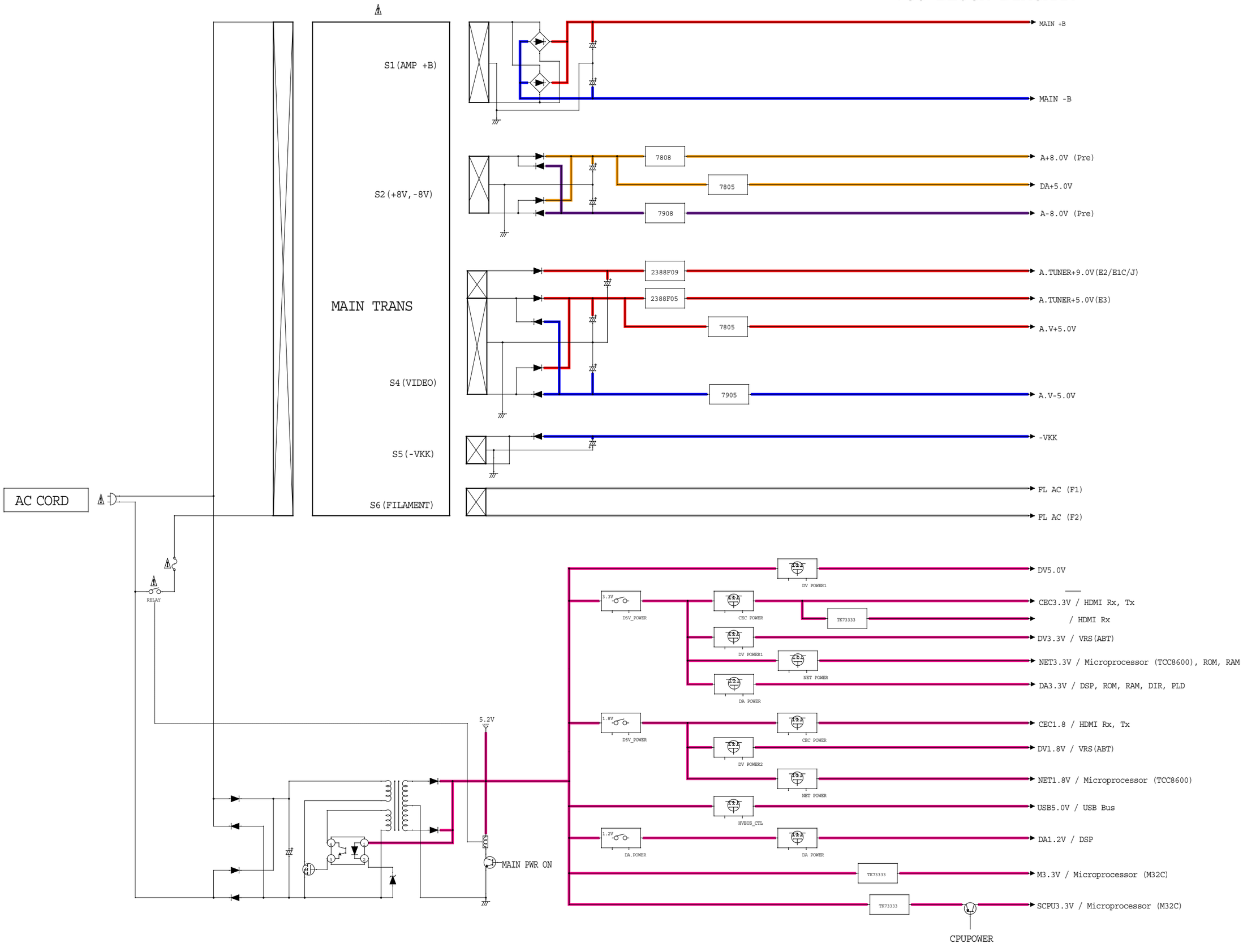

LAEVEL DIAGRAM

LEVEL DIAGRAM
FRONT ch

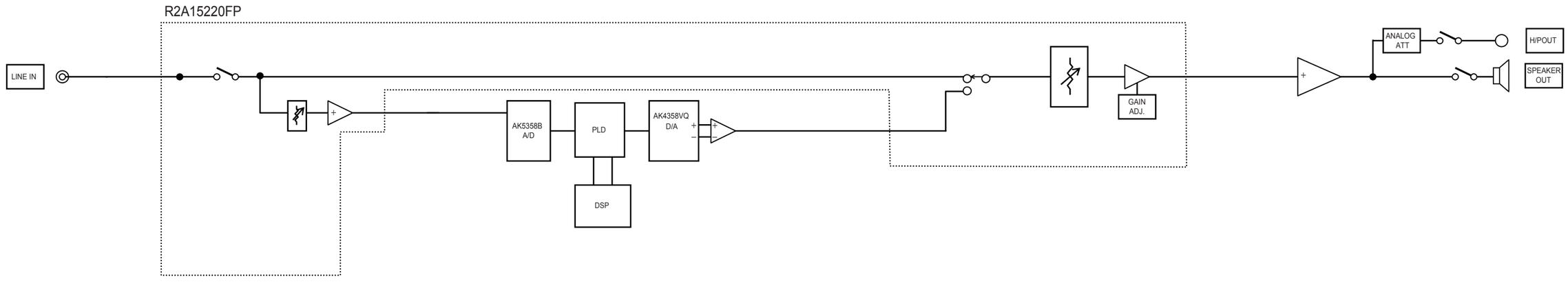

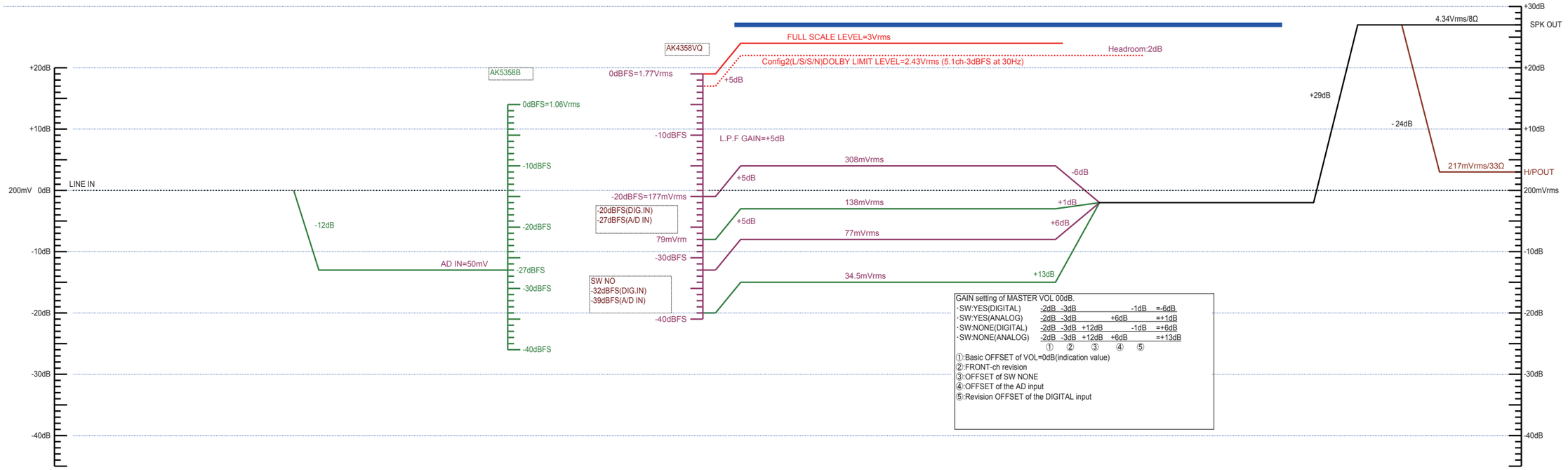

LEVEL DIAGRAM
CENTER ch

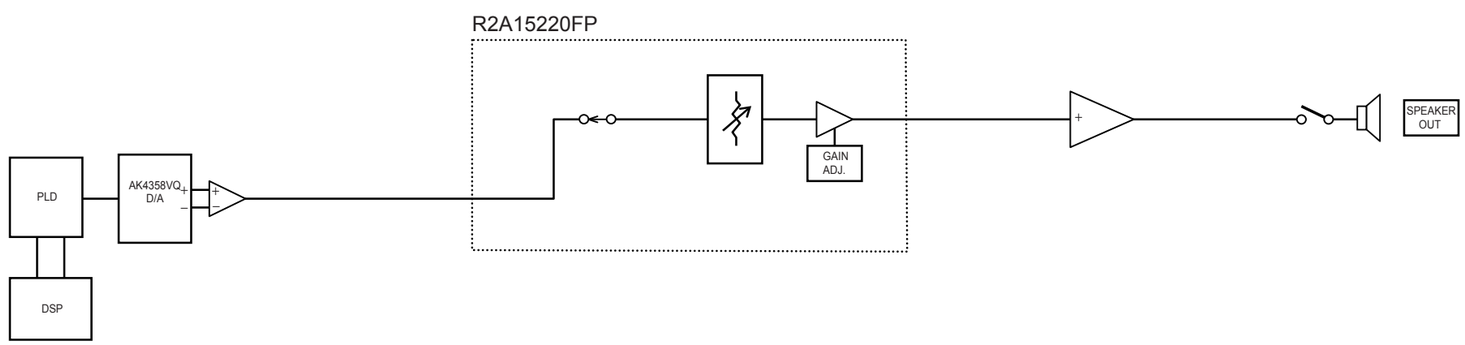

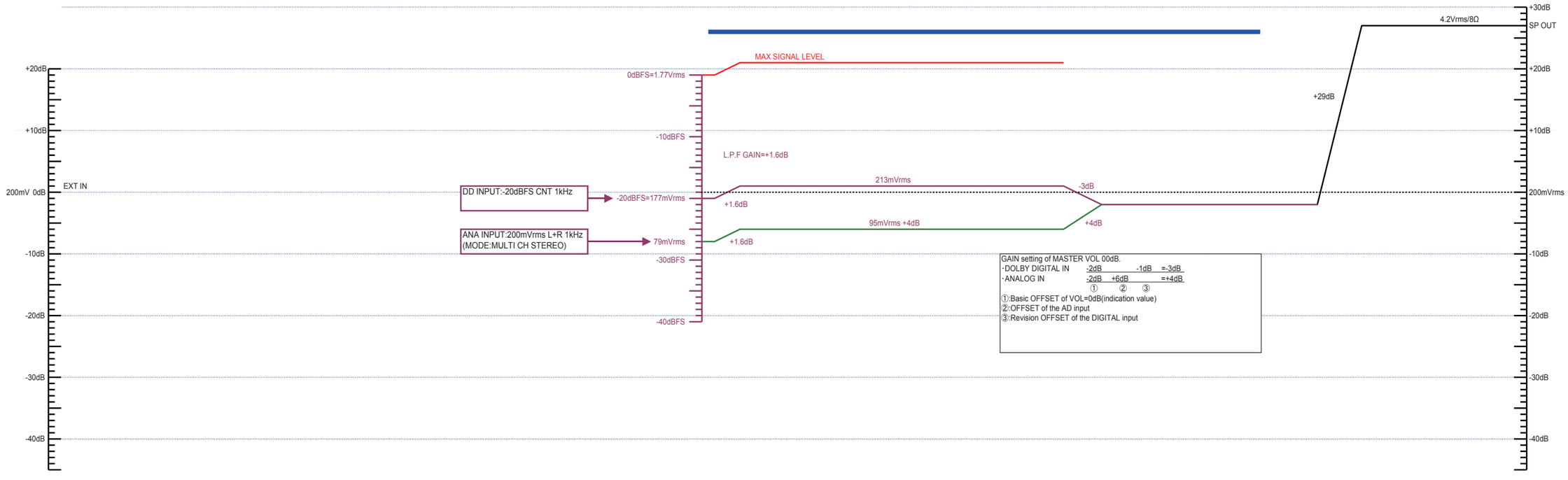

LEVEL DIAGRAM
SUBWOOFER ch

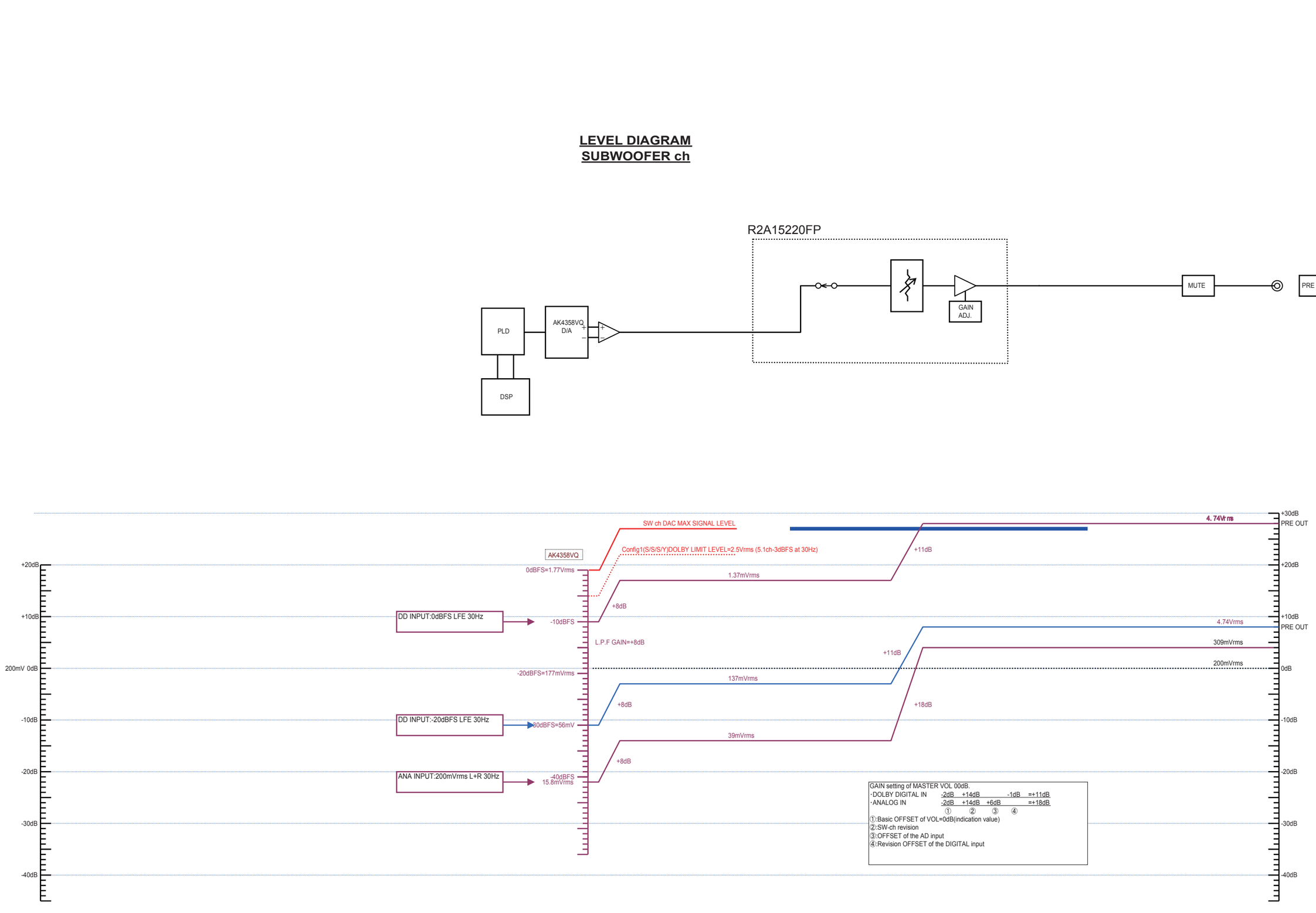

LEVEL DIAGRAM
SURROUND ch

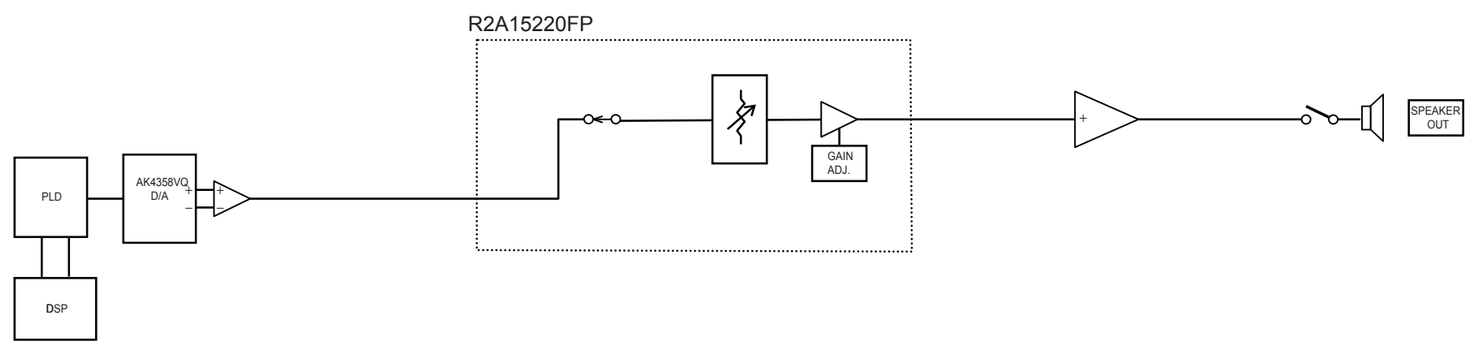

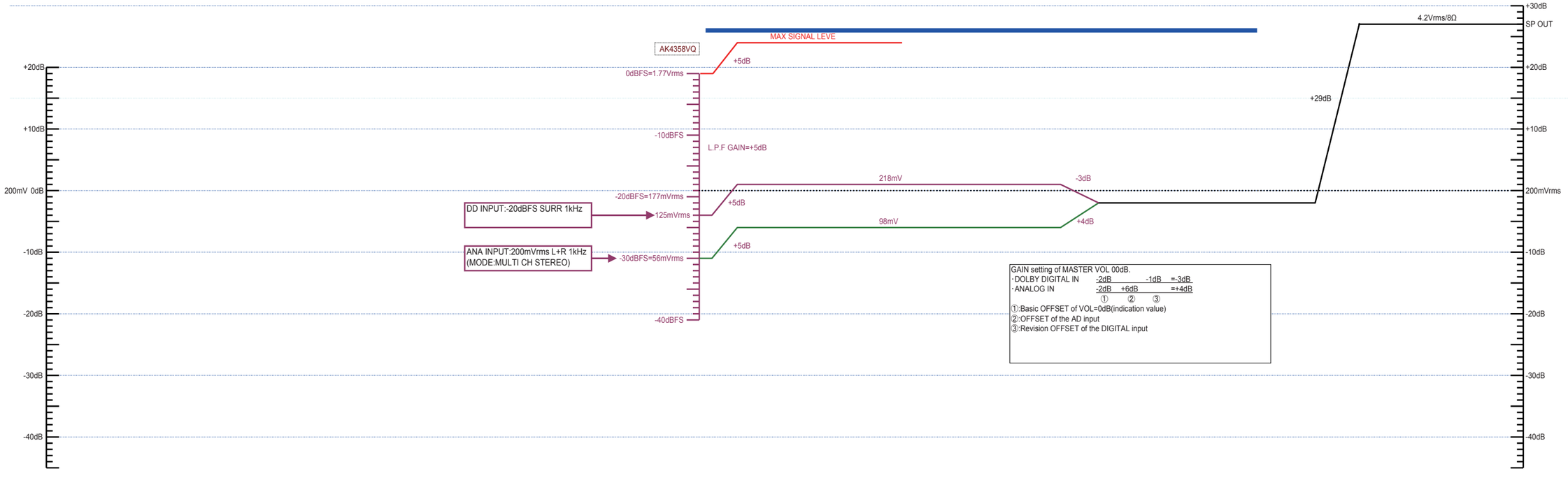

LEVEL DIAGRAM
SURR.BACK ch

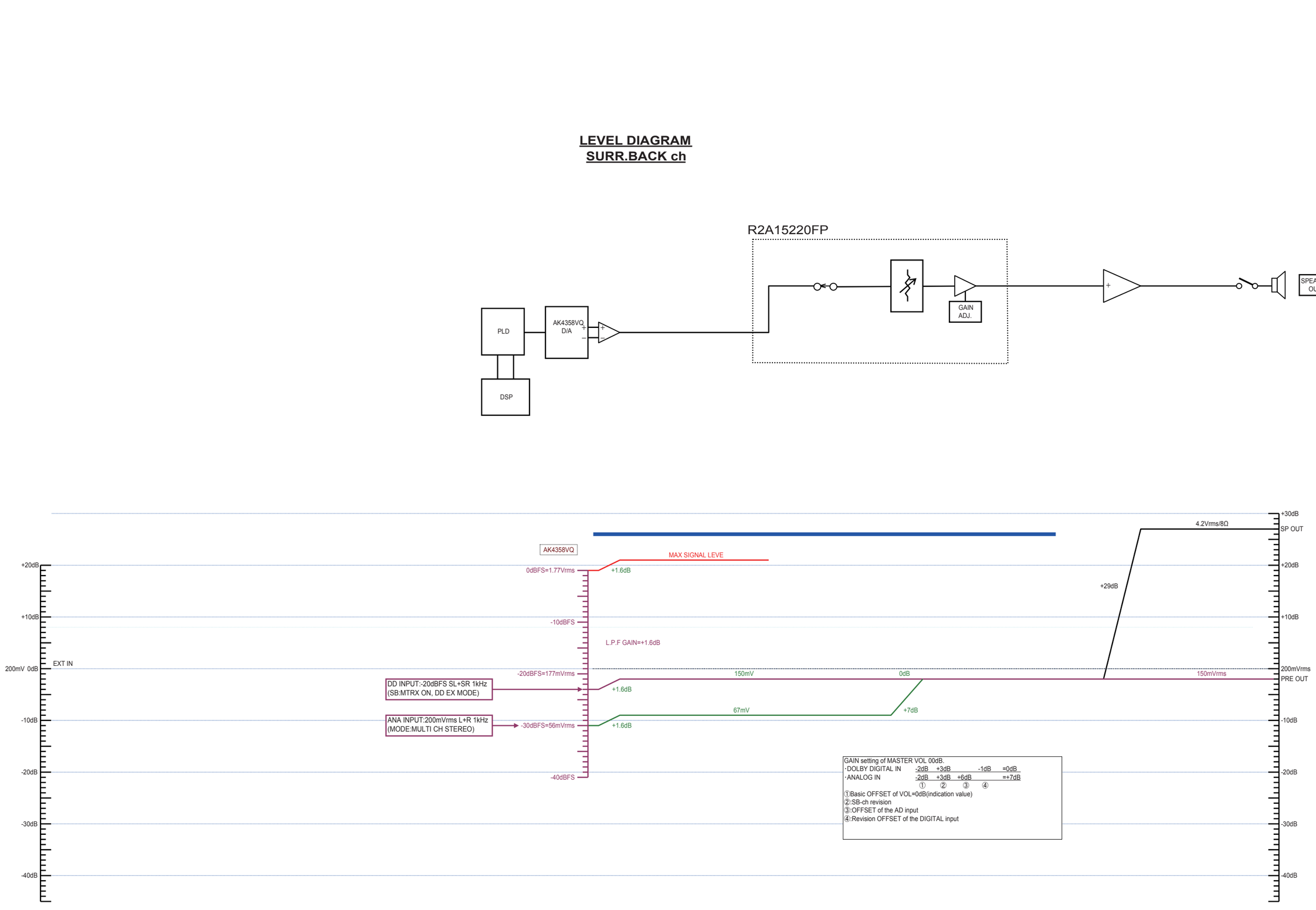

PRINTED WIRING BOARDS

7CH-AMP (COMPONENT SIDE)

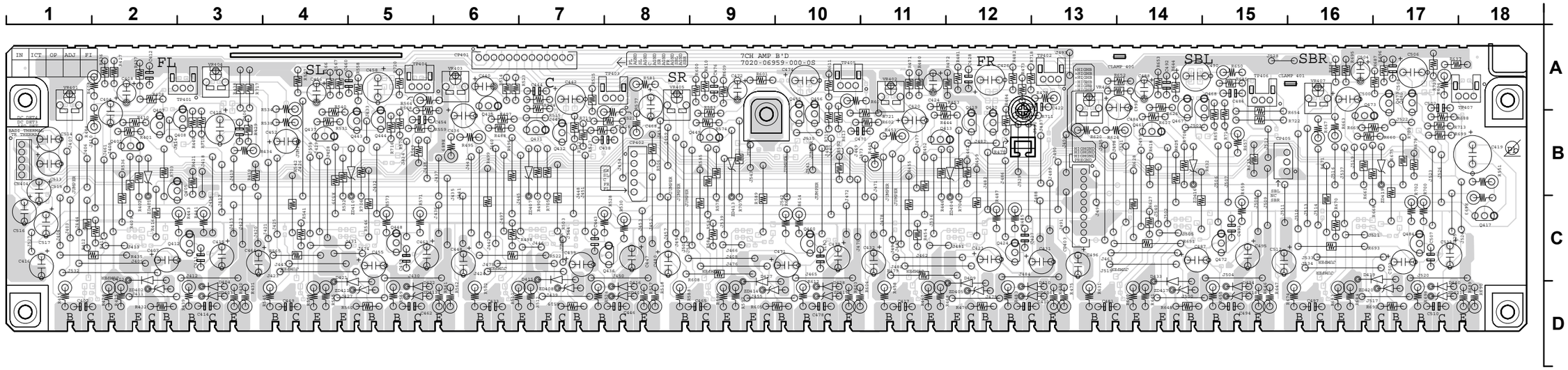

7CH-AMP (FOIL SIDE)

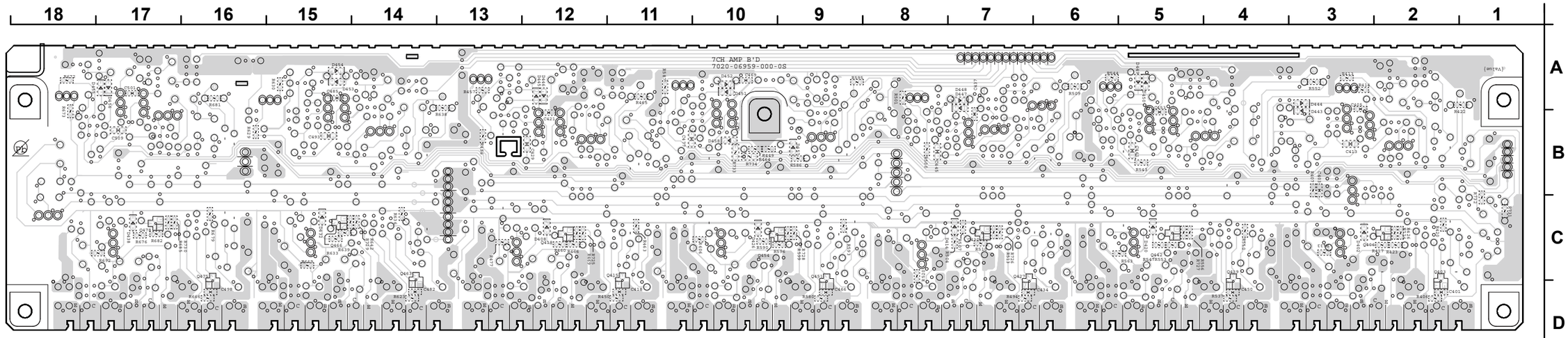

鉛フリー半田
半田付けには、鉛フリー半田 (Sn-Ag-Cu) を使用してください。

Lead-free Solder
When soldering, use the Lead-free Solder (Sn-Ag-Cu).

SMPS (COMPONENT SIDE)

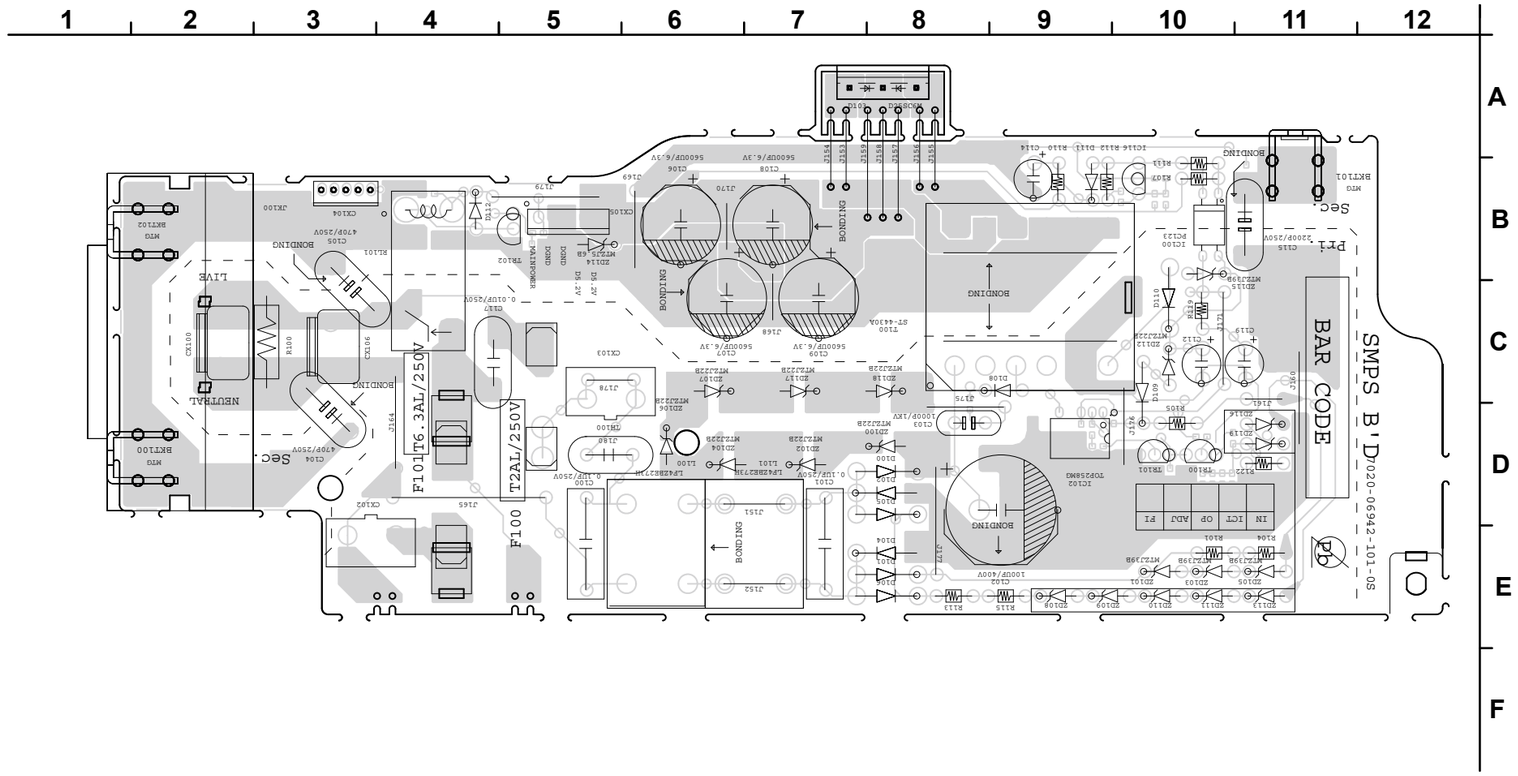

SMPS (FOIL SIDE)

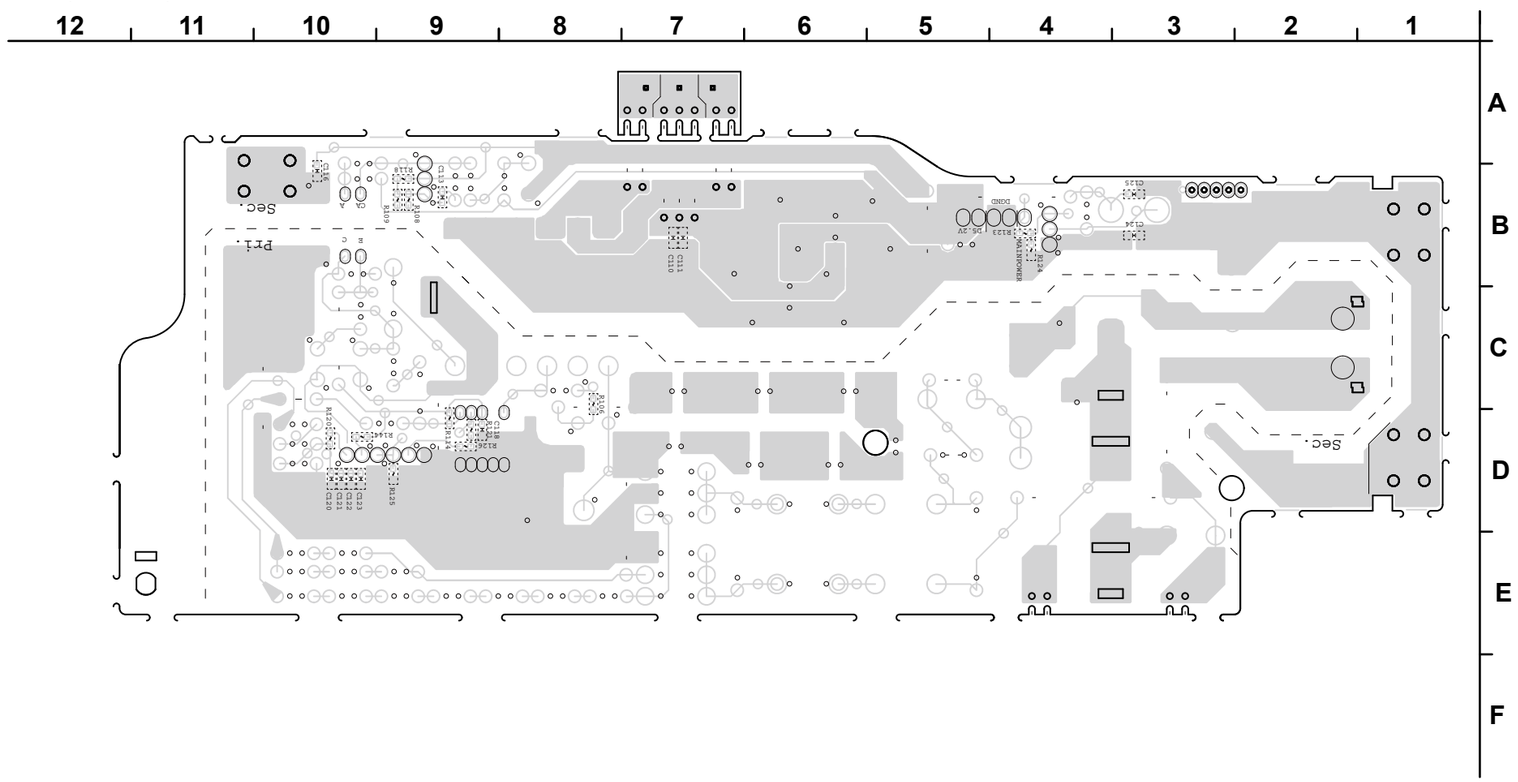

鉛フリー半田
半田付けには、鉛フリー半田 (Sn-Ag-Cu) を使用してください。

Lead-free Solder
When soldering, use the Lead-free Solder (Sn-Ag-Cu).

SPK (COMPONENT SIDE)

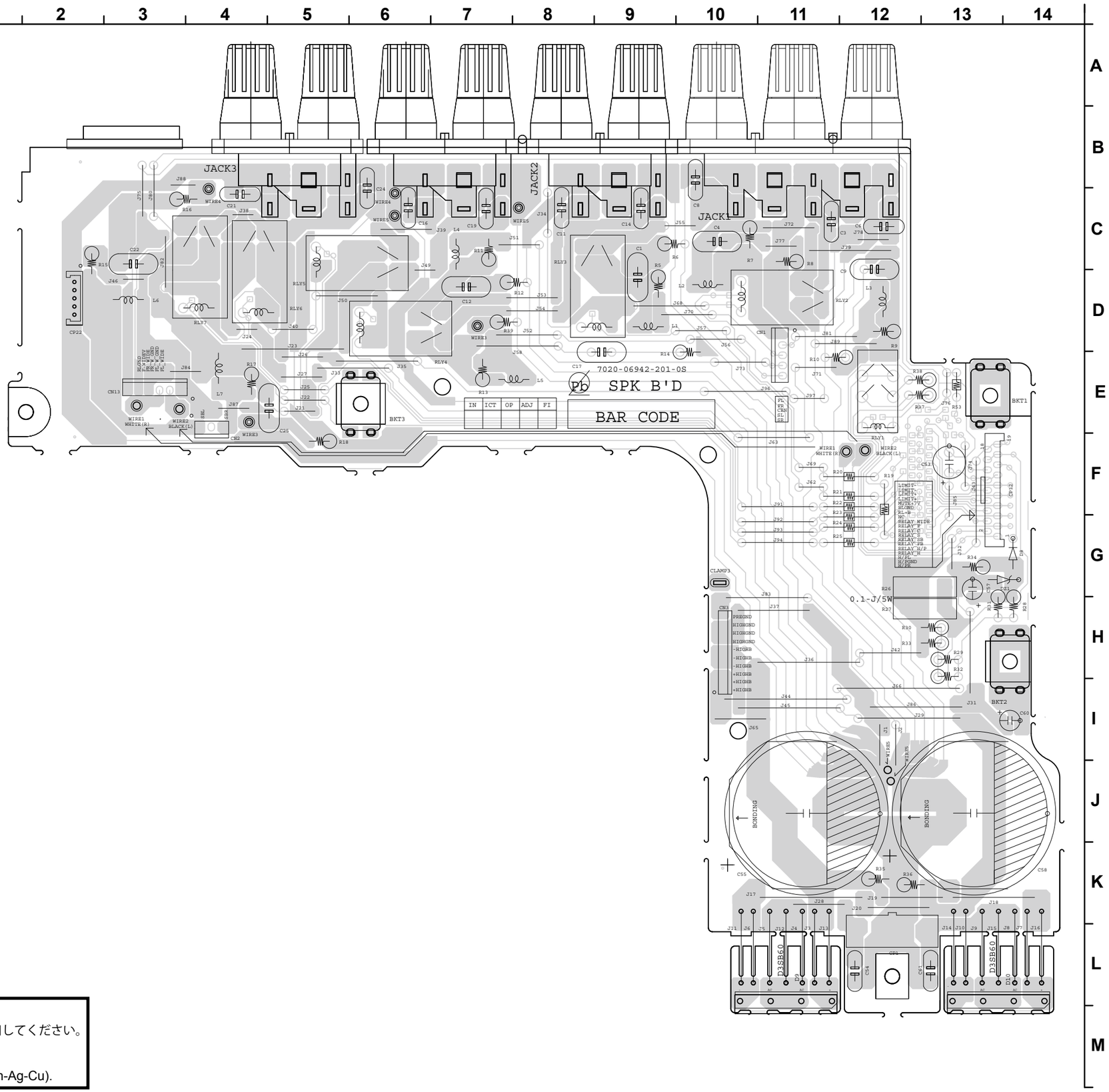

鉛フリー半田
半田付けには、鉛フリー半田 (Sn-Ag-Cu) を使用してください。

Lead-free Solder
When soldering, use the Lead-free Solder (Sn-Ag-Cu).

SPK (FOIL SIDE)

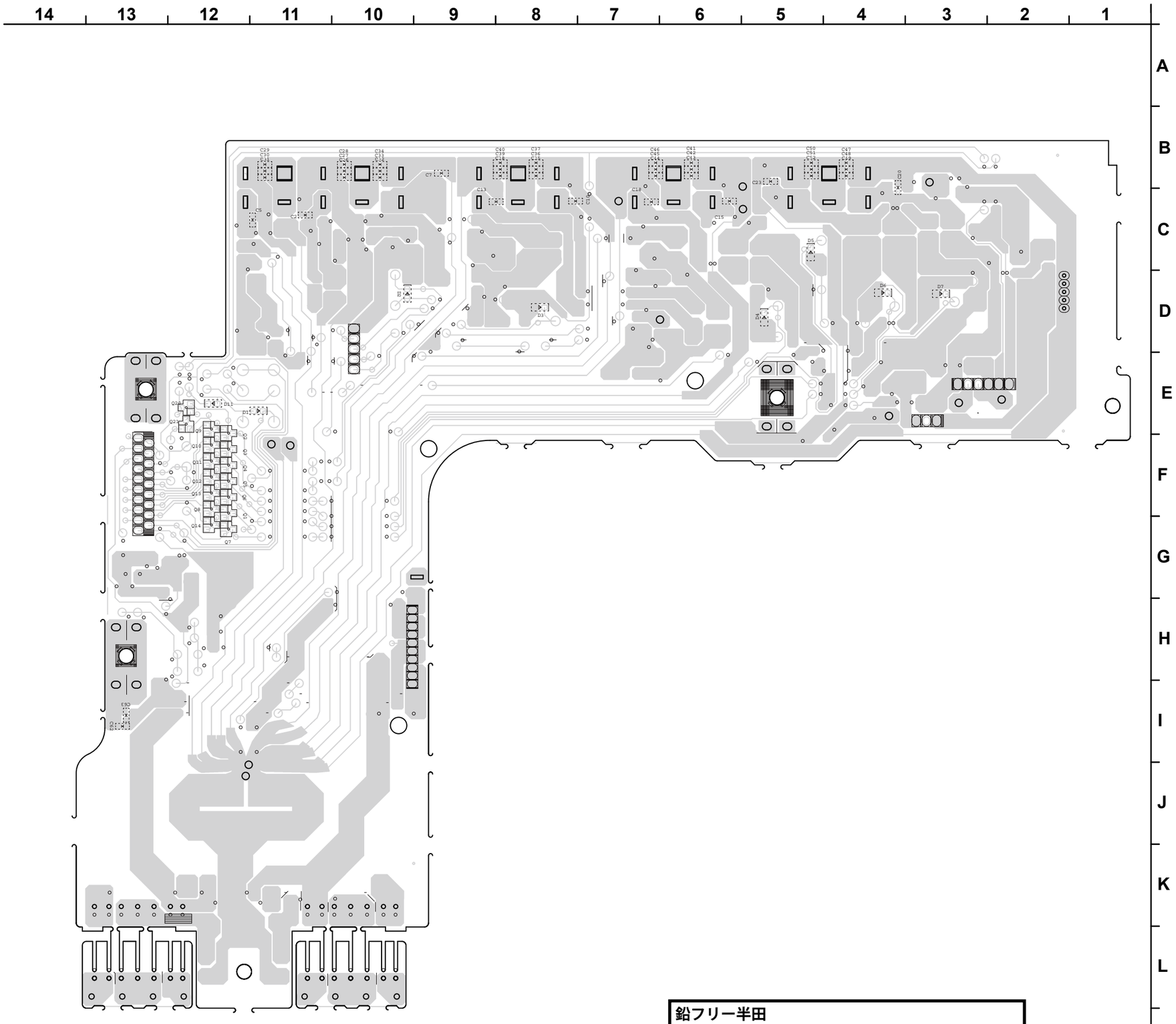

鉛フリー半田
半田付けには、鉛フリー半田 (Sn-Ag-Cu) を使用してください。

Lead-free Solder
When soldering, use the Lead-free Solder (Sn-Ag-Cu).

REG (COMPONENT SIDE)

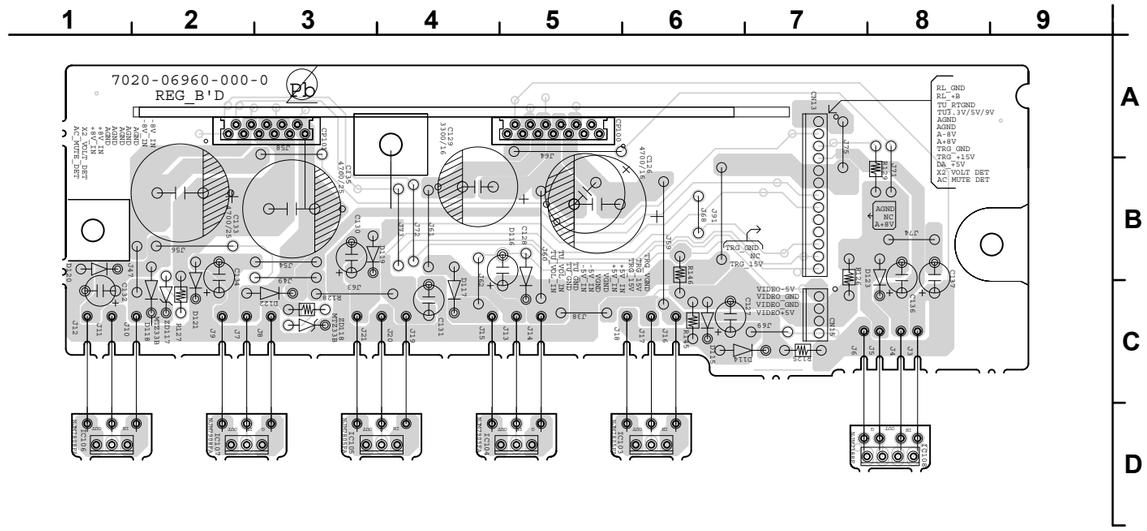

REG_CNT (COMPONENT SIDE)

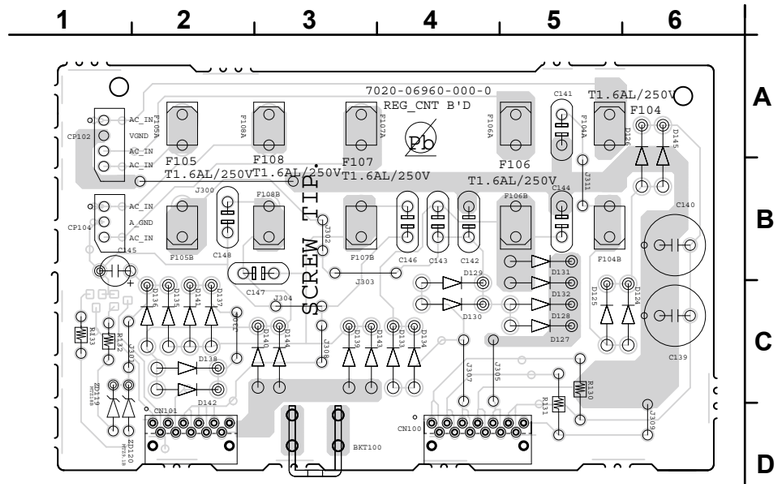

FRONT_CNT (COMPONENT SIDE)

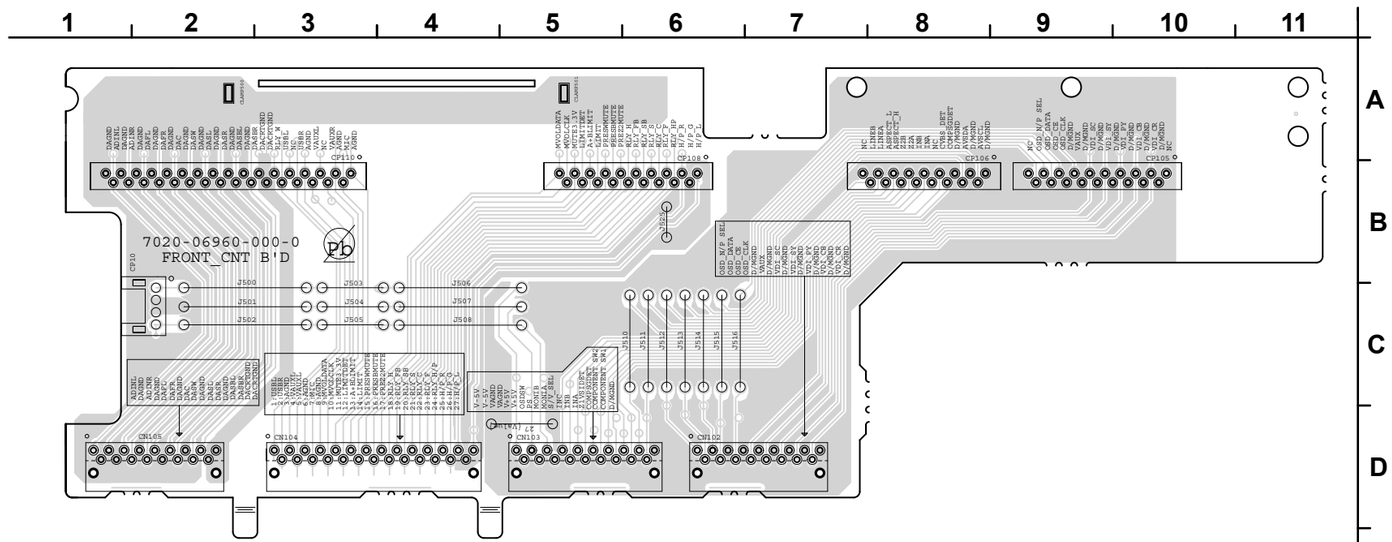

PCB RC-5/M-X (COMPONENT SIDE)

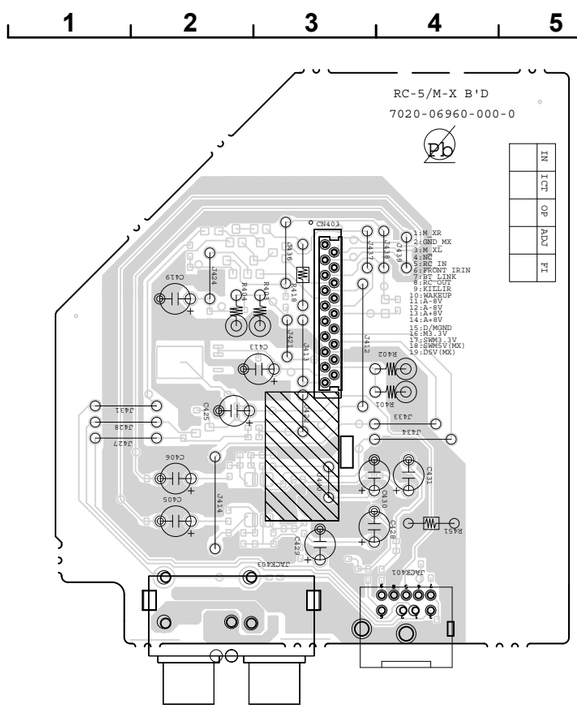

鉛フリー半田
半田付けには、鉛フリー半田 (Sn-Ag-Cu) を使用してください。

Lead-free Solder
When soldering, use the Lead-free Solder (Sn-Ag-Cu).

REG (FOIL SIDE)

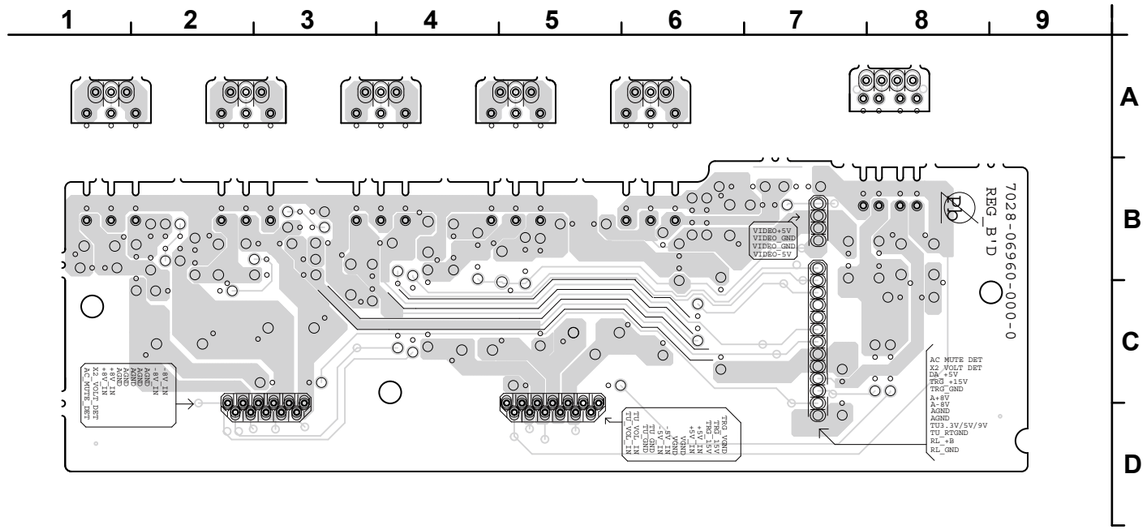

REG_CNT (FOIL SIDE)

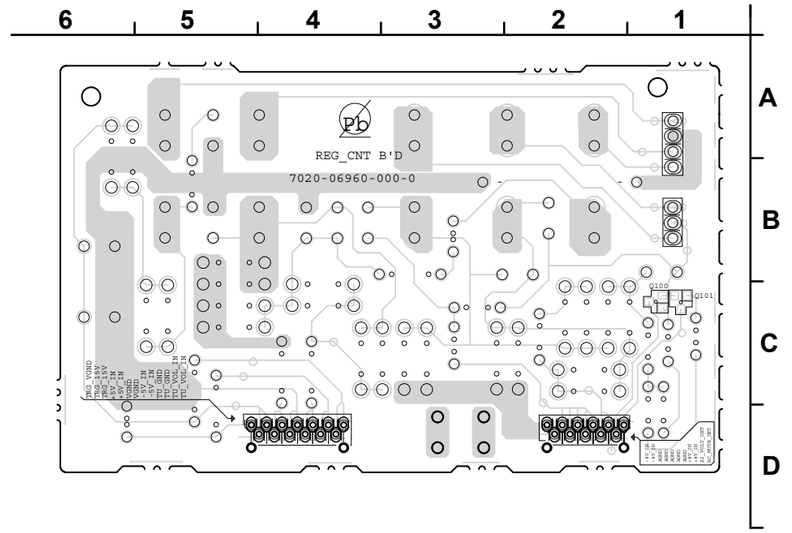

FRONT_CNT (FOIL SIDE)

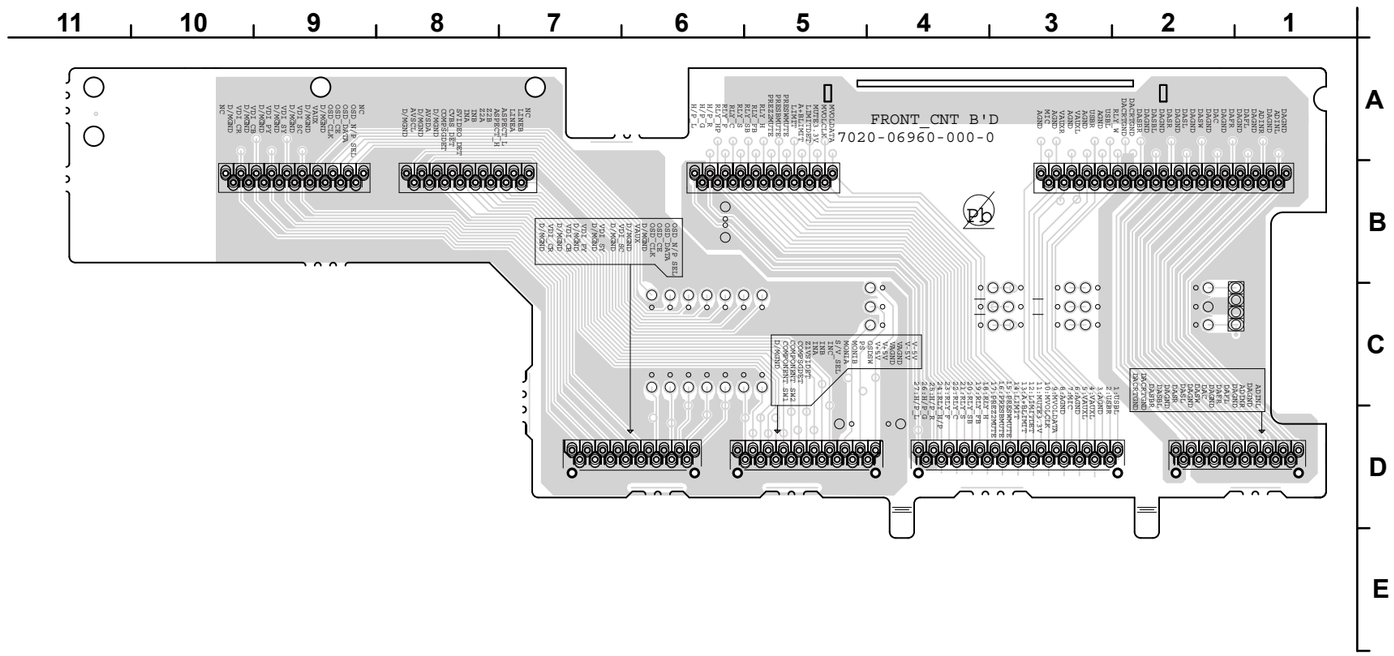

PCB RC-5/M-X (FOIL SIDE)

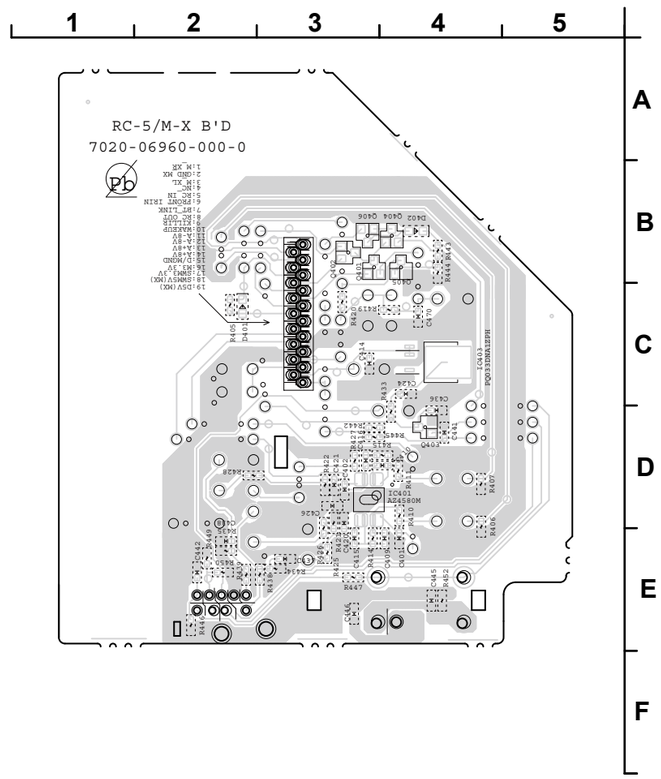

鉛フリー半田
半田付けには、鉛フリー半田 (Sn-Ag-Cu) を使用してください。

Lead-free Solder
When soldering, use the Lead-free Solder (Sn-Ag-Cu).

SIDE_CNT (COMPONENT SIDE)

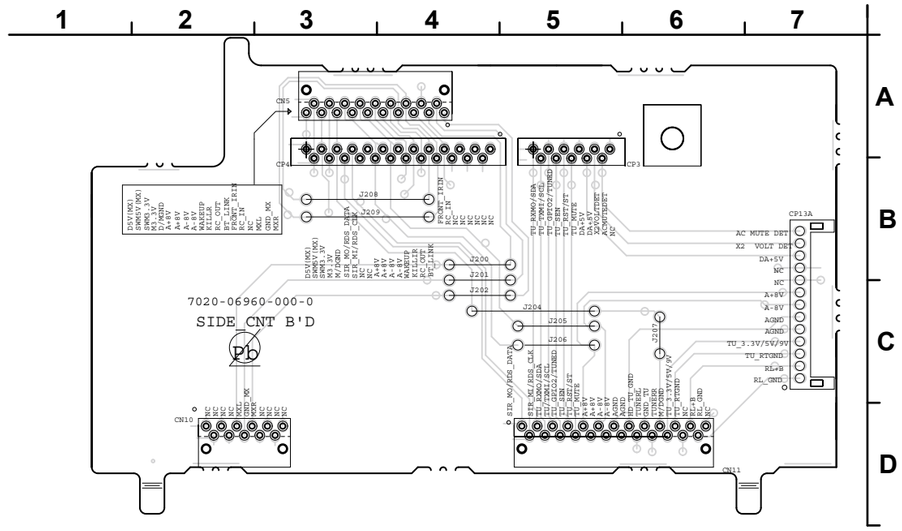

SIDE_CNT (FOIL SIDE)

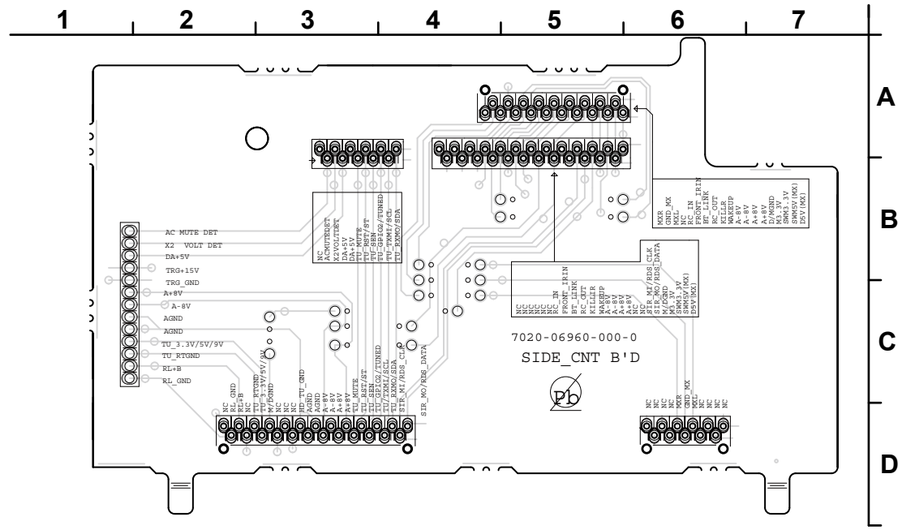

USB (COMPONENT SIDE)

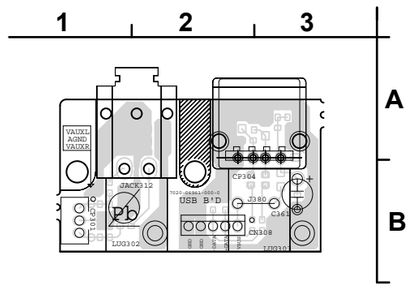

USB (FOIL SIDE)

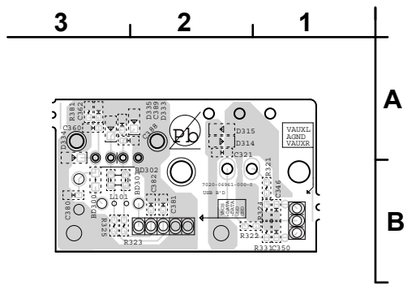

H/P (COMPONENT SIDE)

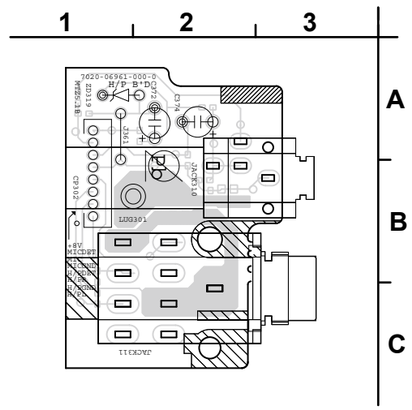

H/P (FOIL SIDE)

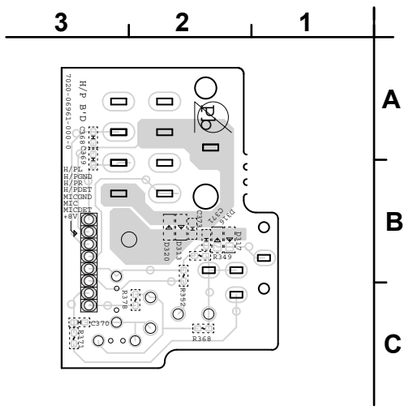

鉛フリー半田
半田付けには、鉛フリー半田 (Sn-Ag-Cu) を使用してください。

Lead-free Solder
When soldering, use the Lead-free Solder (Sn-Ag-Cu).

FRONT (COMPONENT SIDE)

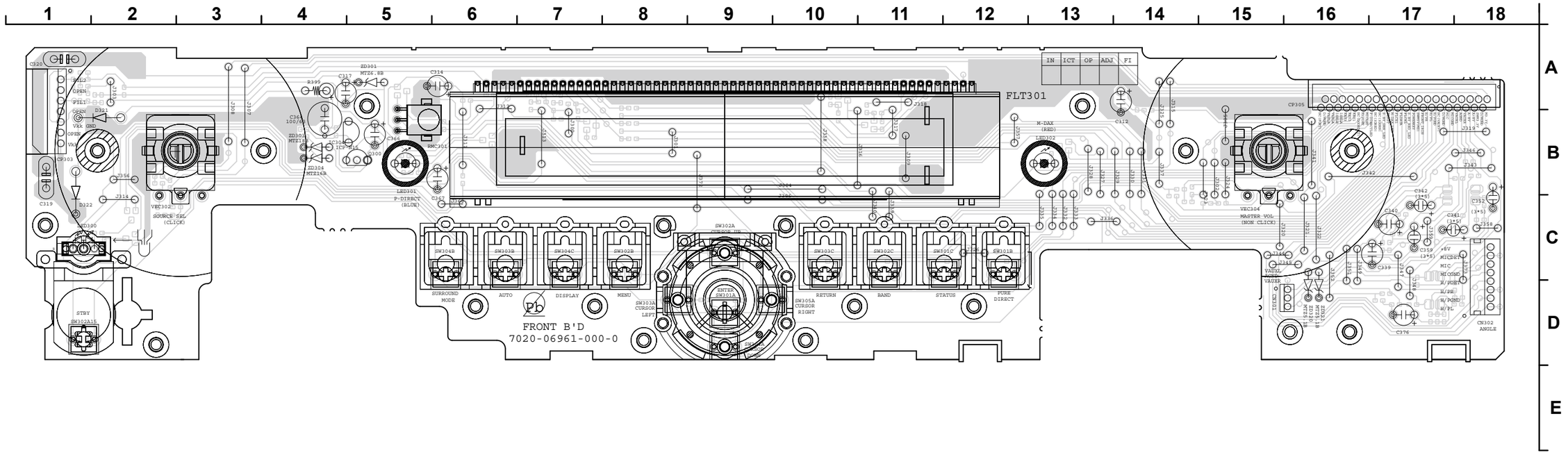

FRONT (FOIL SIDE)

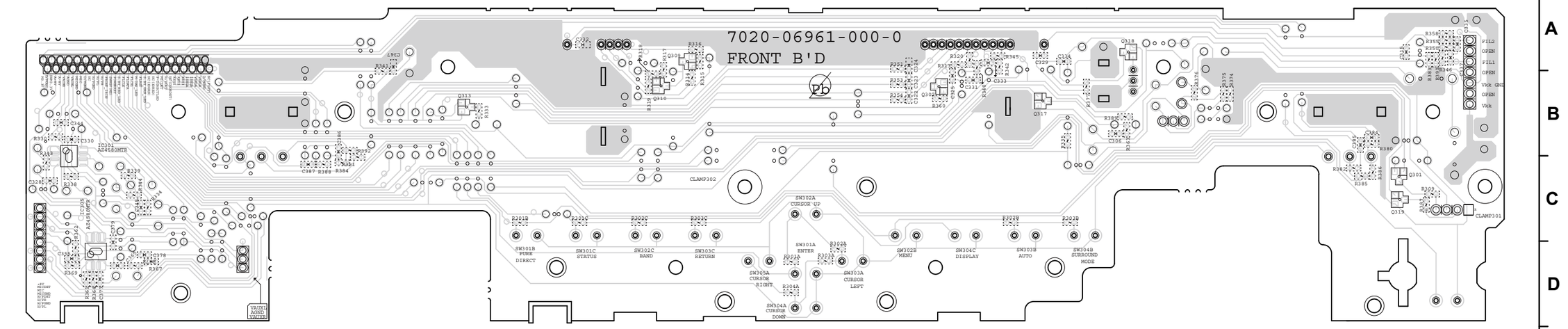

鉛フリー半田
半田付けには、鉛フリー半田 (Sn-Ag-Cu) を使用してください。

Lead-free Solder
When soldering, use the Lead-free Solder (Sn-Ag-Cu).

AUDIO_VIDEO (COMPONENT SIDE)

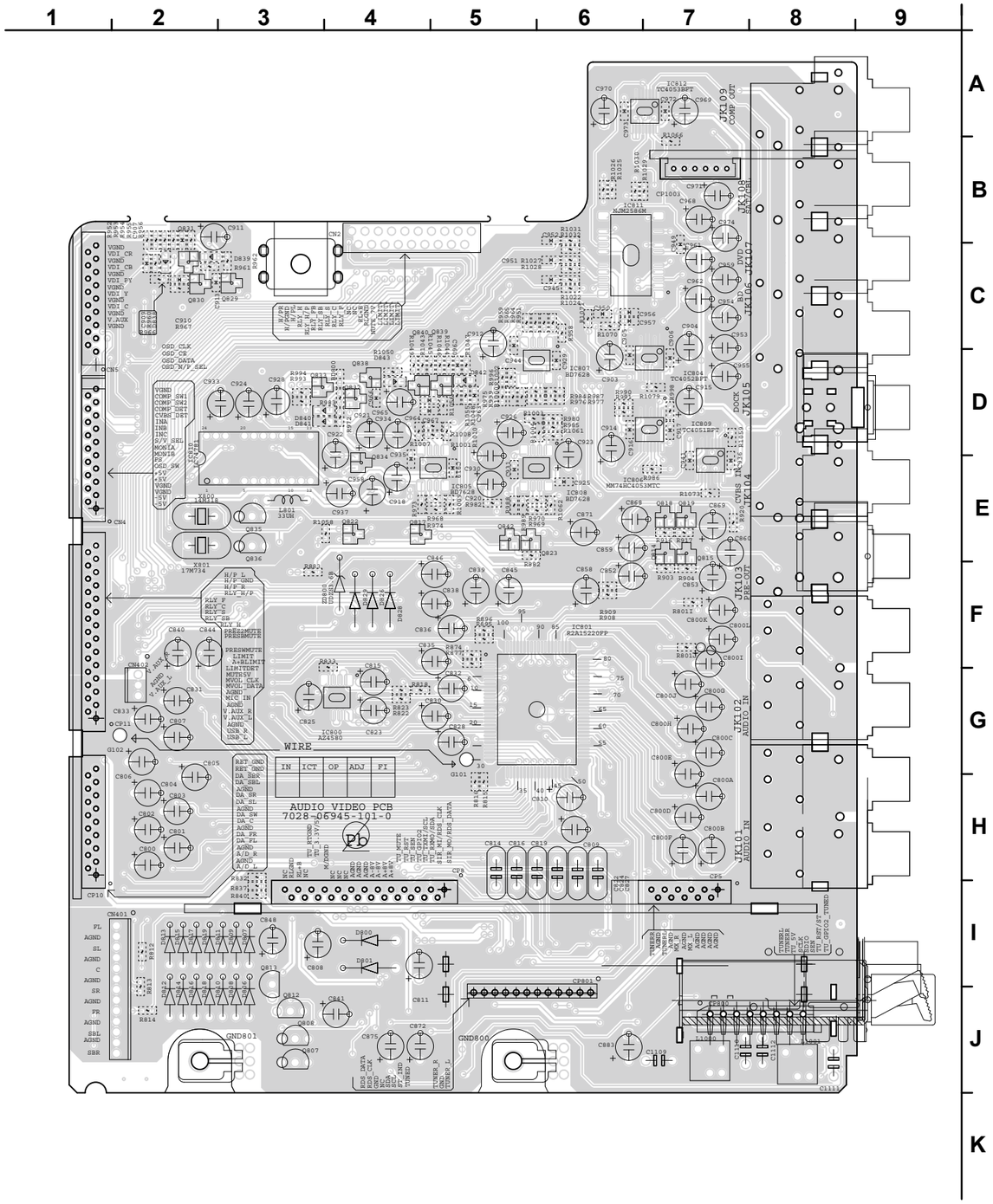

AUDIO_VIDEO (FOIL SIDE)

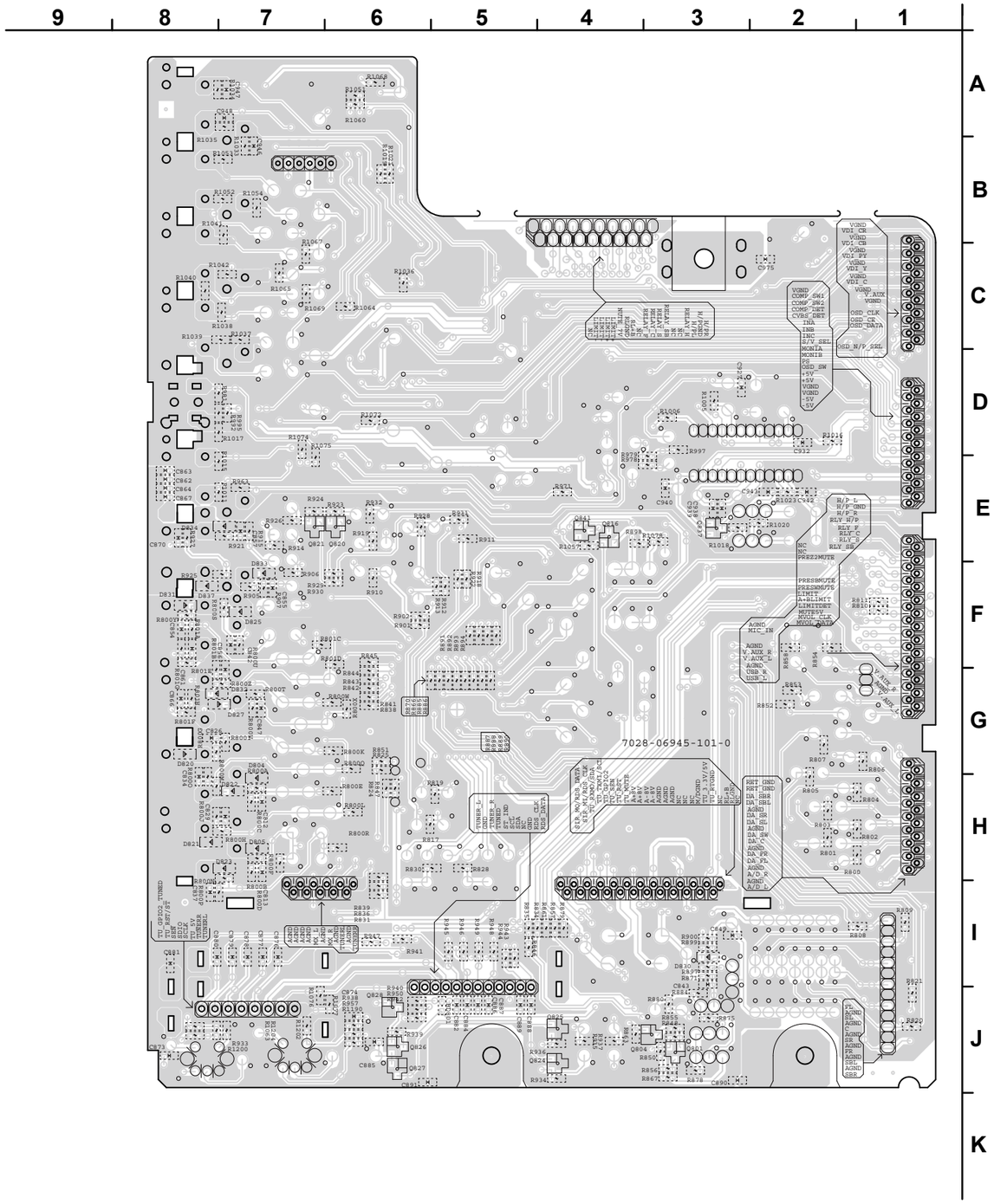

鉛フリー半田
半田付けには、鉛フリー半田 (Sn-Ag-Cu) を使用してください。

Lead-free Solder
When soldering, use the Lead-free Solder (Sn-Ag-Cu).

HDMI (COMPONENT SIDE)

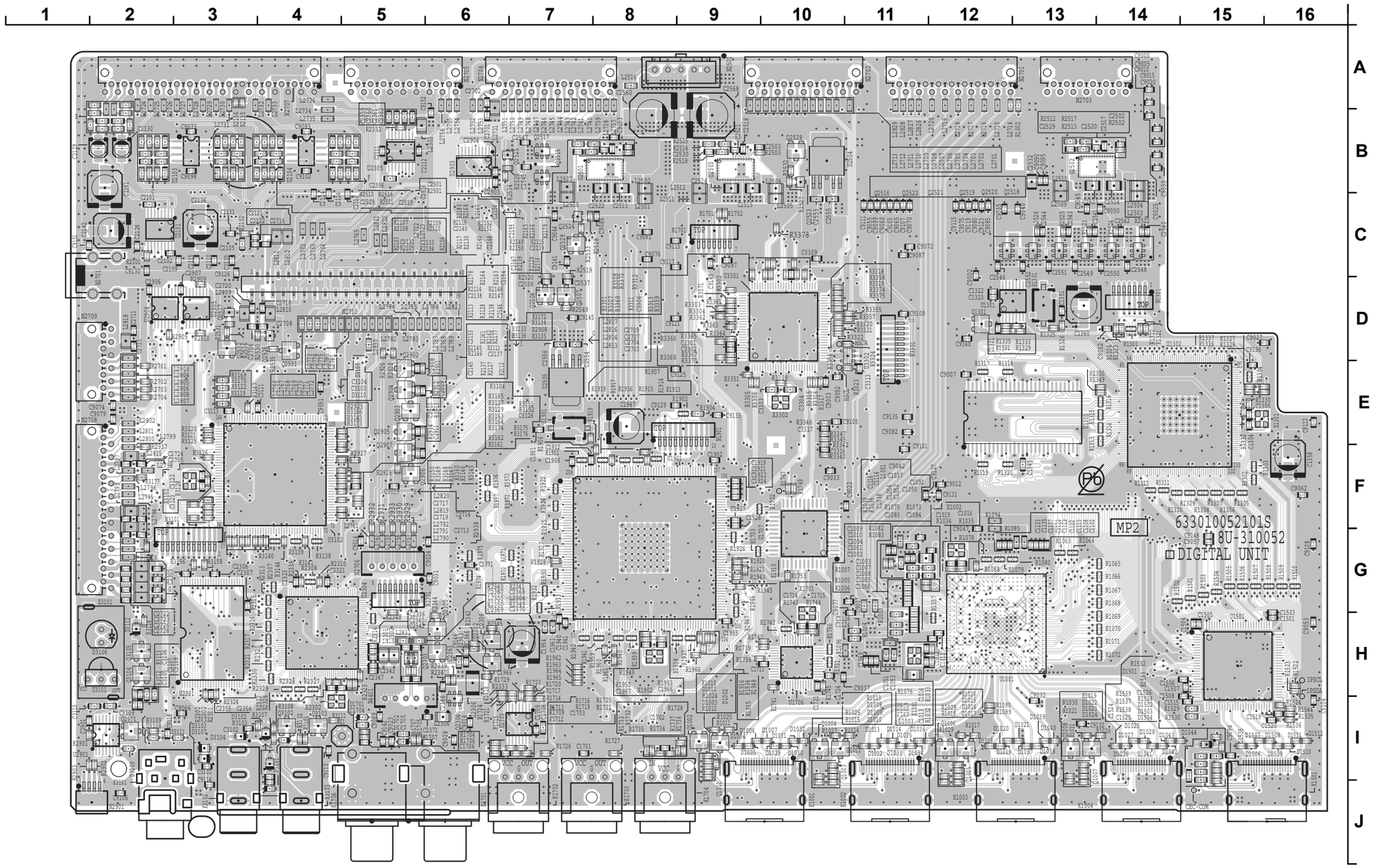

鉛フリー半田
半田付けには、鉛フリー半田 (Sn-Ag-Cu) を使用してください。

Lead-free Solder
When soldering, use the Lead-free Solder (Sn-Ag-Cu).

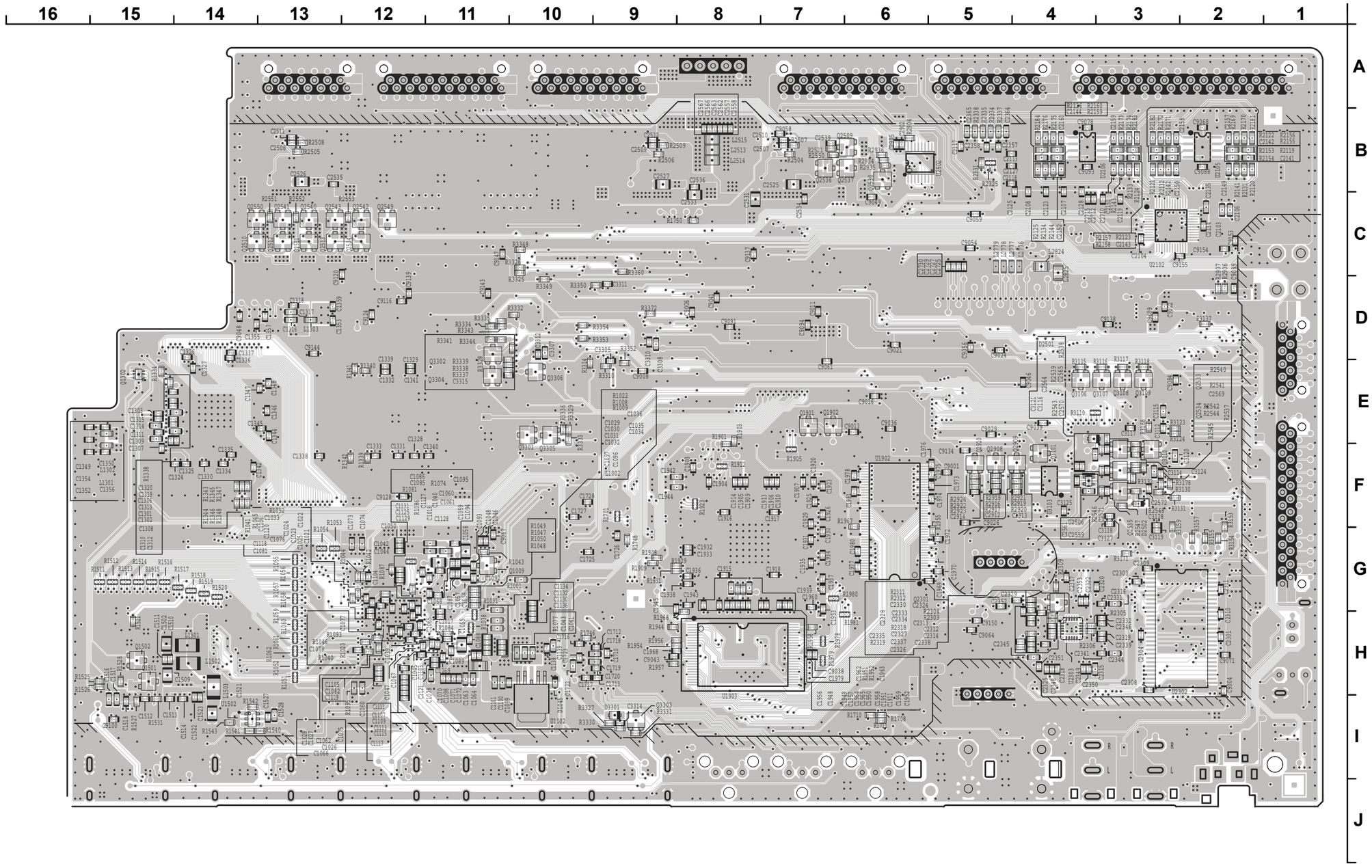

鉛フリー半田
半田付けには、鉛フリー半田 (Sn-Ag-Cu) を使用してください。

Lead-free Solder
When soldering, use the Lead-free Solder (Sn-Ag-Cu).

AMP B'D 1/2

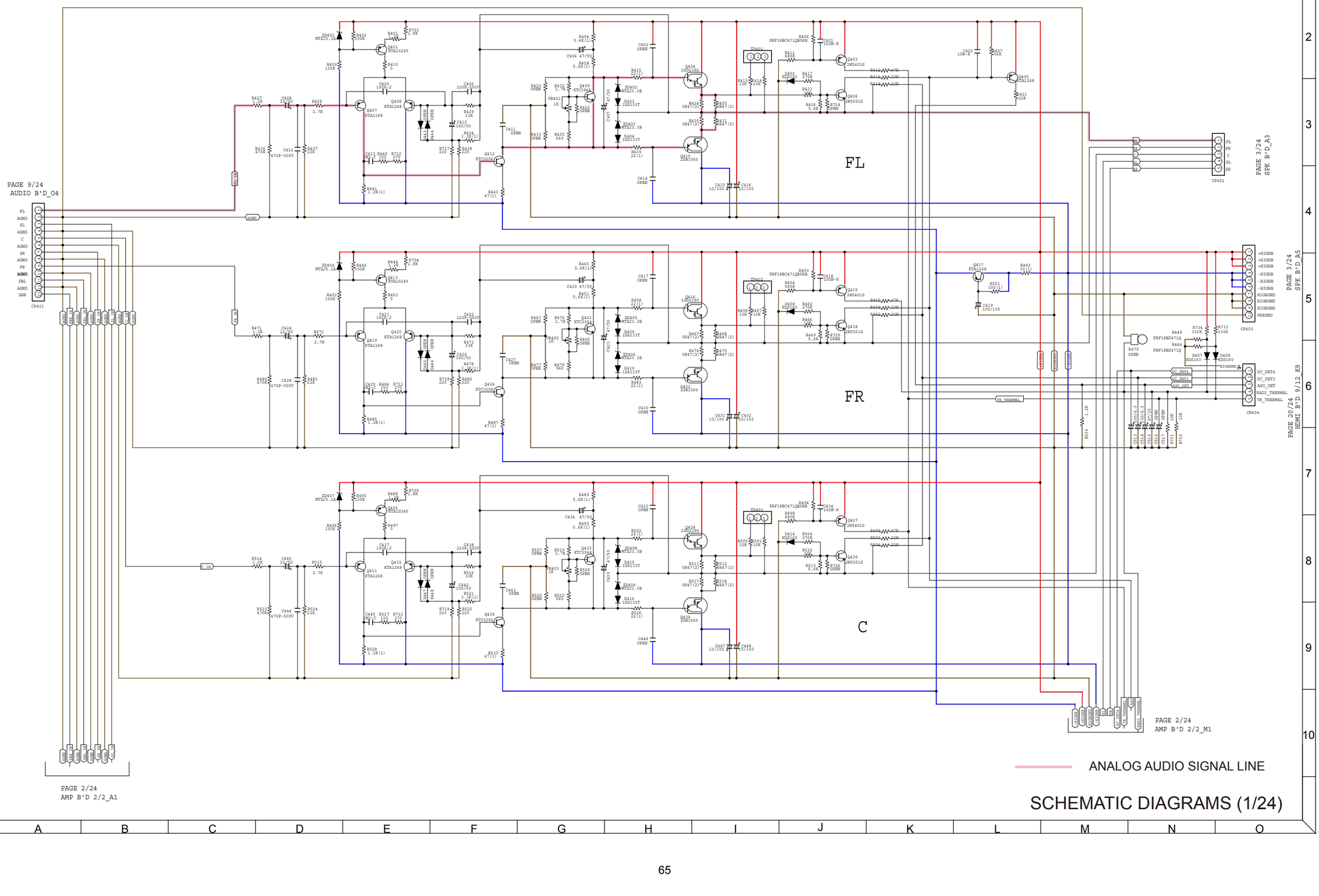

SCHEMATIC DIAGRAMS (1/24)

PAGE 2/24
AMP B'D 1/2_M10

SL

SR

SBL

SBR

AMP B'D 2/2

PAGE 3/24
SPK B'D_A4

SCHEMATIC DIAGRAMS (2/24)

SPEAKER B'D

SPK_SMPS 1/2

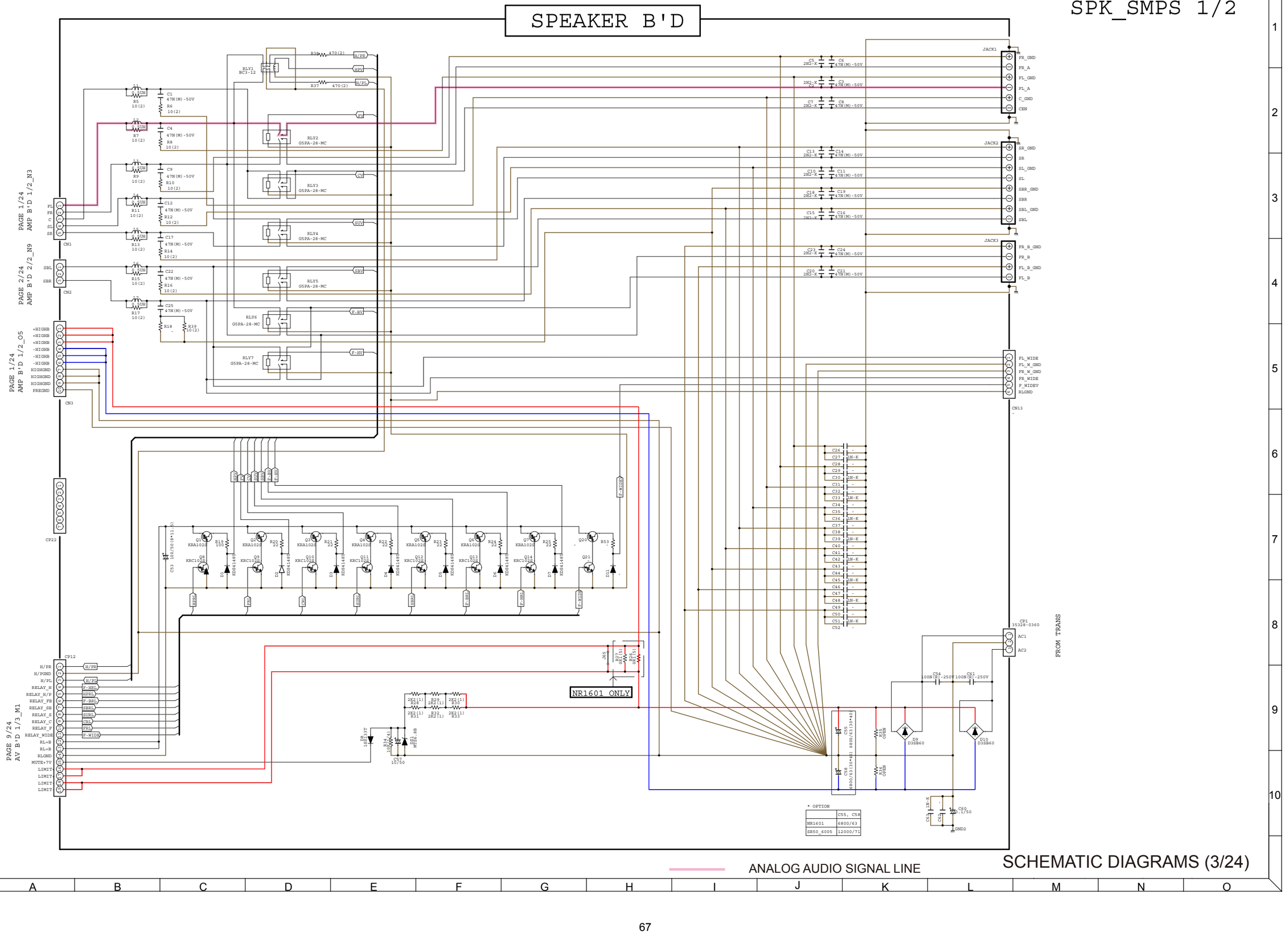

SCHEMATIC DIAGRAMS (3/24)

SMPS B'D

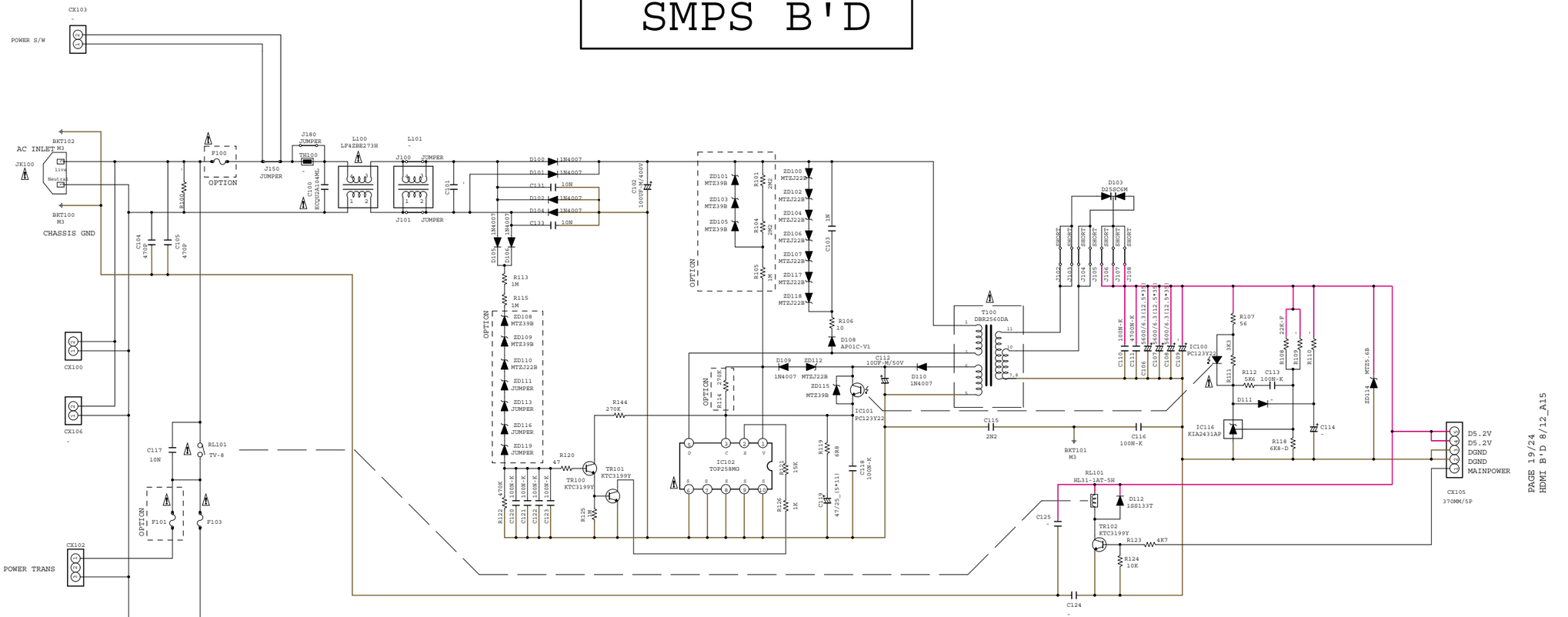

OPTION TABLE

	ZD108	ZD109	ZD110	ZD111	ZD113	ZD116	ZD119	ZD101	ZD103	ZD105	R101	R104	R105	R114	F100	F101
U1	MTZJ39B	MTZJ39B	MTZJ22B	JUMPER	JUMPER	JUMPER	JUMPER	MTZJ39B	MTZJ39B	MTZJ39B	2M2(5)	2M2(5)	1M(5)	270K	2A	6.3A
N	1M (5)	1M (5)	MTZJ39B	MTZJ39B	MTZJ39B	MTZJ39B	MTZJ39B	OPEN	OPEN	OPEN	OPEN	OPEN	OPEN	68 K	1.6A	3.15A
F	MTZJ39B	MTZJ39B	JUMPER	JUMPER	JUMPER	JUMPER	JUMPER	MTZJ39B	MTZJ39B	MTZJ39B	2M2(5)	2M2(5)	1M(5)	270K	2A	6.3A

SCHEMATIC DIAGRAMS (4/24)

REGULATOR B'D

REG_COMMON CNT 1/4

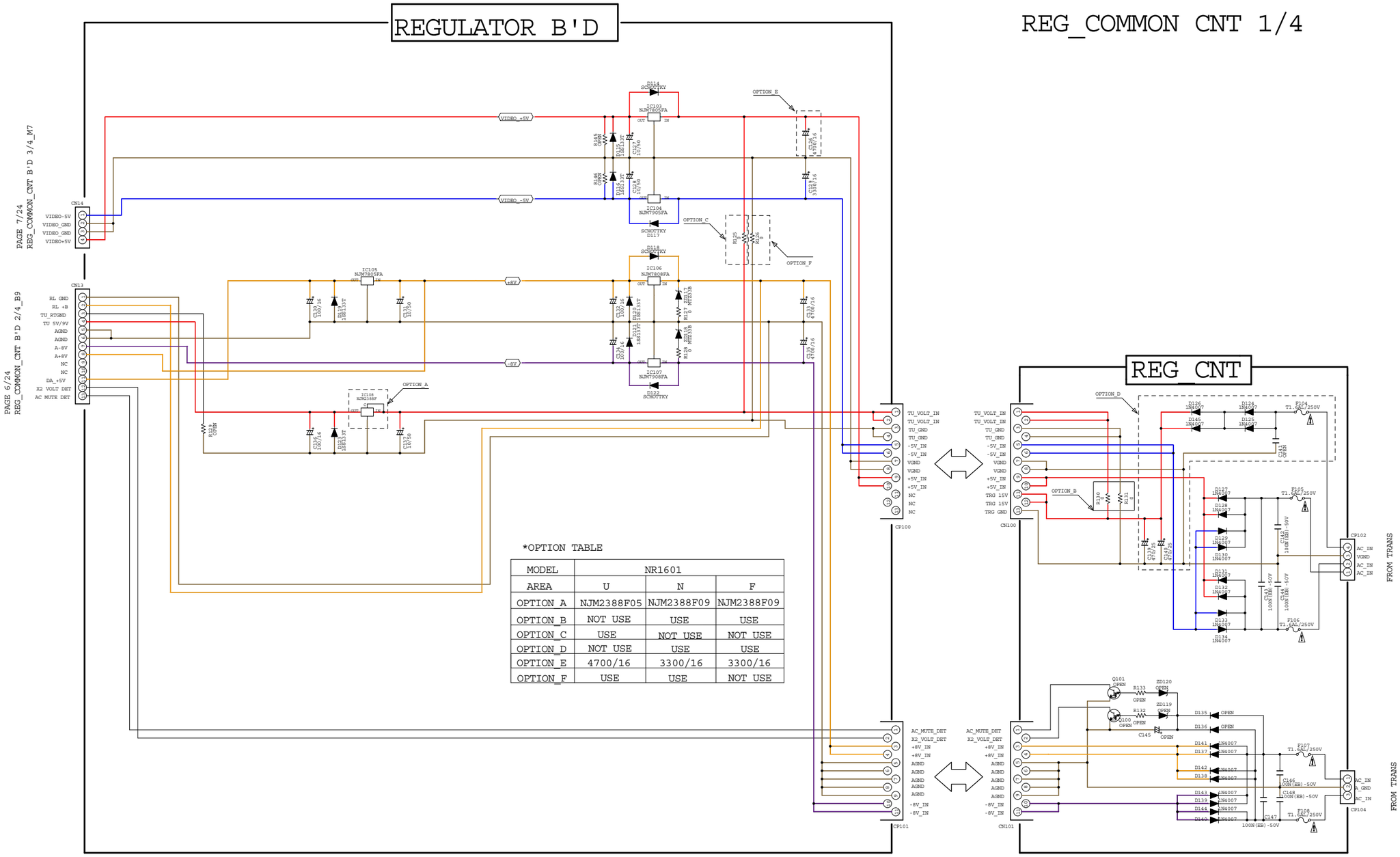

*OPTION TABLE

MODEL	NR1601		
AREA	U	N	F
OPTION_A	NJM2388F05	NJM2388F09	NJM2388F09
OPTION_B	NOT USE	USE	USE
OPTION_C	USE	NOT USE	NOT USE
OPTION_D	NOT USE	USE	USE
OPTION_E	4700/16	3300/16	3300/16
OPTION_F	USE	USE	NOT USE

SCHEMATIC DIAGRAMS (5/24)

SIDE CONNECTOR

REG_COMMON CNT 2/4

OPEN

CN4

PAGE 8/24
REG_COMMON CNT B'D 4/4_D4

CN5

CP3

PAGE 20/24
HDMI B'D 9/12_E15

CP4

PAGE 20/24
HDMI B'D 9/12_C15

CP13

PAGE 5/24
REG_COMMON_CNT B'D 1/4_B4

CN11

PAGE 9/24
AV B'D 1/3_D1

CN10

PAGE 9/24
AV B'D 1/3_C1

SCHEMATIC DIAGRAMS (6/24)

FRONT CONNECTOR

REG_COMMON CNT 3/4

PAGE 20/24
HDMI B'D 9/12_C4

PAGE 20/24
HDMI B'D 9/12_F4

PAGE 20/24
HDMI B'D 9/12_G9

PAGE 20/24
HDMI B'D 9/12_E9

OPEN

CP107

CP105

CP106

OPEN

CP108

CP109

CP110

TO HDMI

CN102

CN103

CN104

CN105

CP10

TO REGULATOR
PAGE 5/24
REG_COMMON CNT B'D 1/4_B3

TO AV B'D

PAGE 11/24
AV B'D 3/3_O7

PAGE 11/24
AV B'D 3/3_O5

PAGE 9/24
AV B'D 1/3_I1

PAGE 9/24
AV B'D 1/3_G1

ANALOG AUDIO SIGNAL LINE

SCHEMATIC DIAGRAMS (7/24)

REG_COMMON CNT 4/4

RC-5/M-X

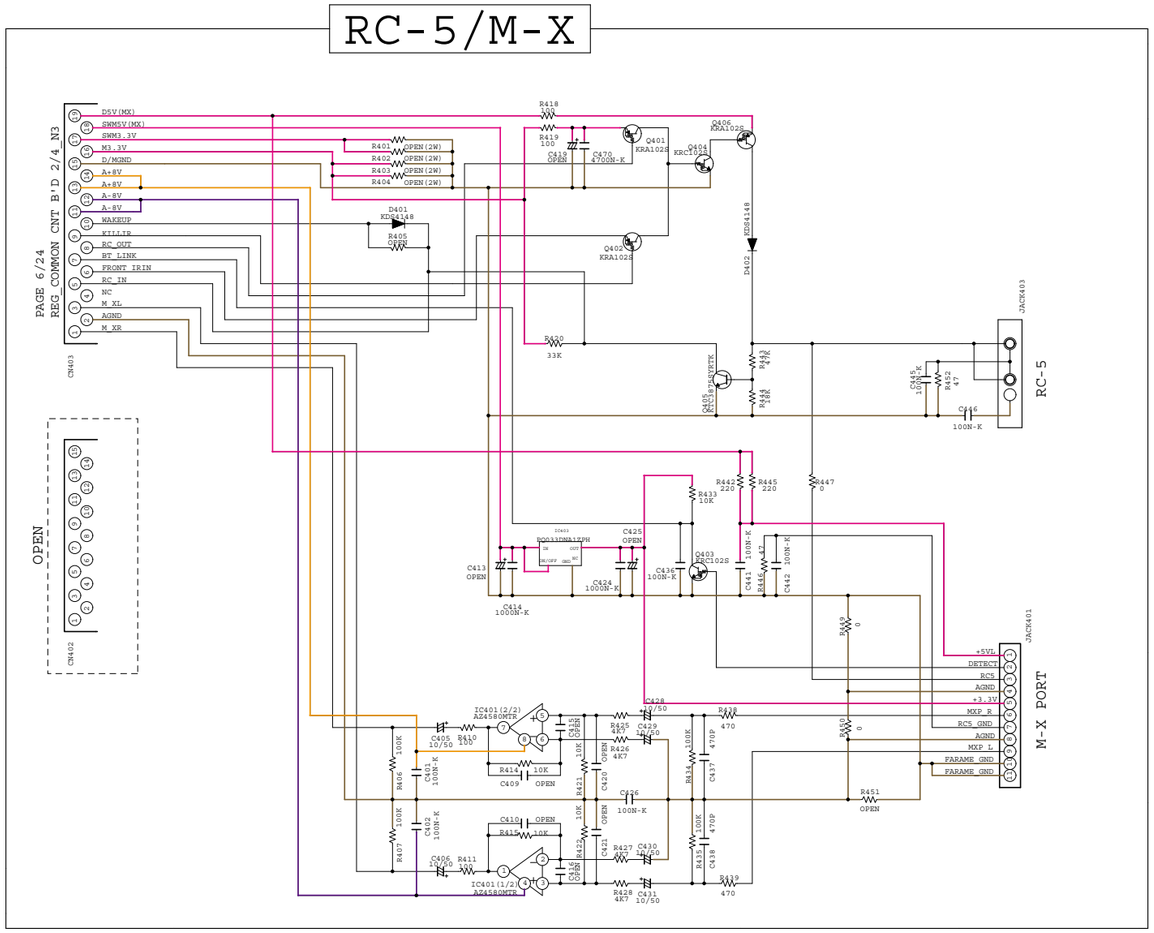

SCHEMATIC DIAGRAMS (8/24)

AV B'D(1/3)

PAGE 6/24
REG_COMMON CNT B'D 2/4_N9

REG_COMMON CNT B'D 2/4_J9
PAGE 6/24

PAGE 7/24
REG_COMMON CNT B'D 3/4_L8

PAGE 7/24
REG_COMMON CNT B'D 3/4_H8

PAGE 3/24
SPK_SMPS B'D 1/2_A9

PAGE 1/24
AMP B'D 1/2_A4

TO TUNER
N5

JK101
6P-PINJACK

JK102
6P-PINJACK

JK103
3P-PINJACK

IC801
R2A15220FP

IC800:A

IC800:B

OPEN

ANALOG AUDIO SIGNAL LINE

SCHEMATIC DIAGRAMS (9/24)

AV B'D(2/3)

MODEL	NR1601		
AREA	U1B	N1	F
OPTION_A	O	X	X
OPTION_B	0ohm	OPEN	0ohm
OPTION_C	X	O	O
OPTION_D	X	O	X

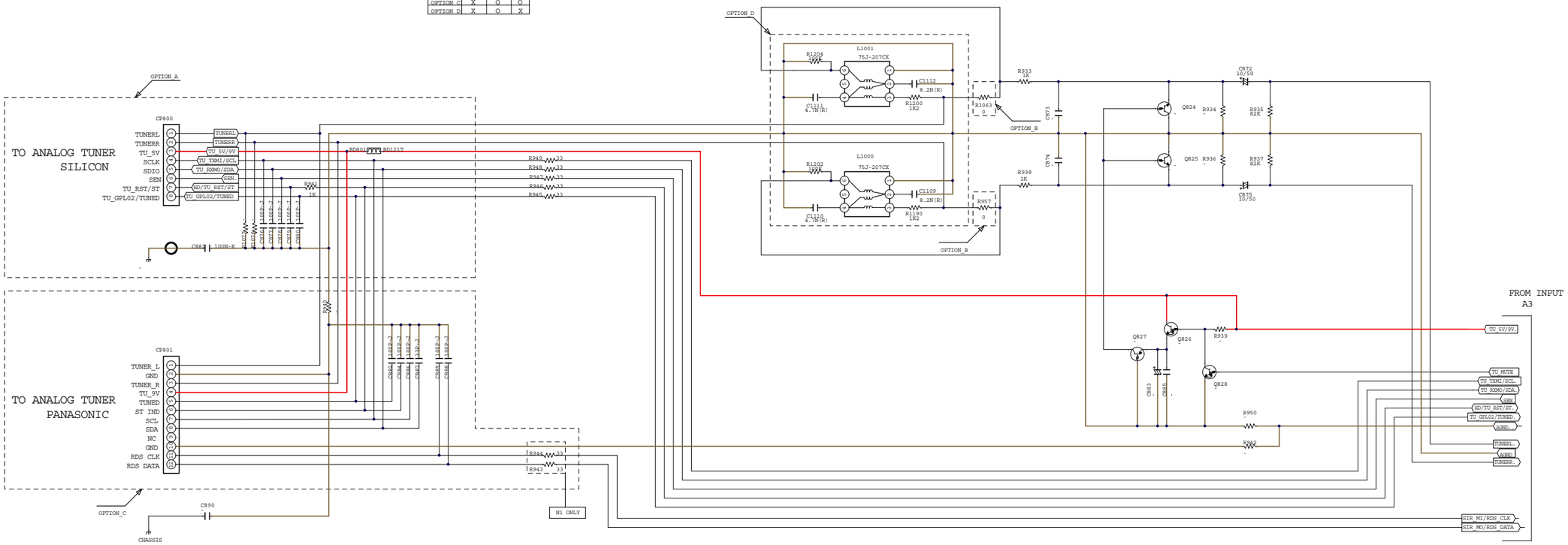

SCHEMATIC DIAGRAMS (10/24)

AV B'D(3/3)

CVBS OUTPUT SW (7C4052BF)

INPUT			OUTPUT		FUCTION
INH	A	B			
L	L	L	X0	Y0	-
L	H	L	X1	Y1	-
L	L	H	X2	Y2	-
L	H	H	X3	Y3	-
H	X	X	NONE	NONE	

CVBS INPUT SW (MM74HC4051MX)

INPUT			OUTPUT	NR1601
INH	A	B	C		
L	L	L	L	Y0	MUTE
L	H	L	L	Y7	DVD
L	H	L	L	Y1	SAT/CBL
L	L	H	H	Y6	-
L	L	H	L	Y2	BD

MUTE(PS)	
H	ON
L	OFF

	R1020	R1018	Q837	Q836	Q835	X801
U1	0	OPEN	OPEN	OPEN	OPEN	OPEN
N1	OPEN	10K	KRA102S	KTC2874HT	KRC111M	17M734
F	0	OPEN	OPEN	OPEN	OPEN	OPEN

TO CONNECT FRONT

REG_COMMON CNT B'D 3/4_E8 PAGE 7/24

REG_COMMON CNT B'D 3/4_D8 PAGE 7/24

TO CONNECT FRONT

VIDEO SIGINAL LINE

COMPONENT (Y) SIGNAL LINE

SCHEMATIC DIAGRAMS (11/24)

HDMI B'D(1/12)
8U-310052 DIGITAL_UNIT

DIGITAL VIDEO SIGINAL LINE
S(Y) VIDEO SIGINAL LINE
HDMI/TMDS SIGNAL LINE
VIDEO SIGINAL LINE
COMPONENT (Y) SIGNAL LINE

SCHEMATIC DIAGRAMS (12/24)

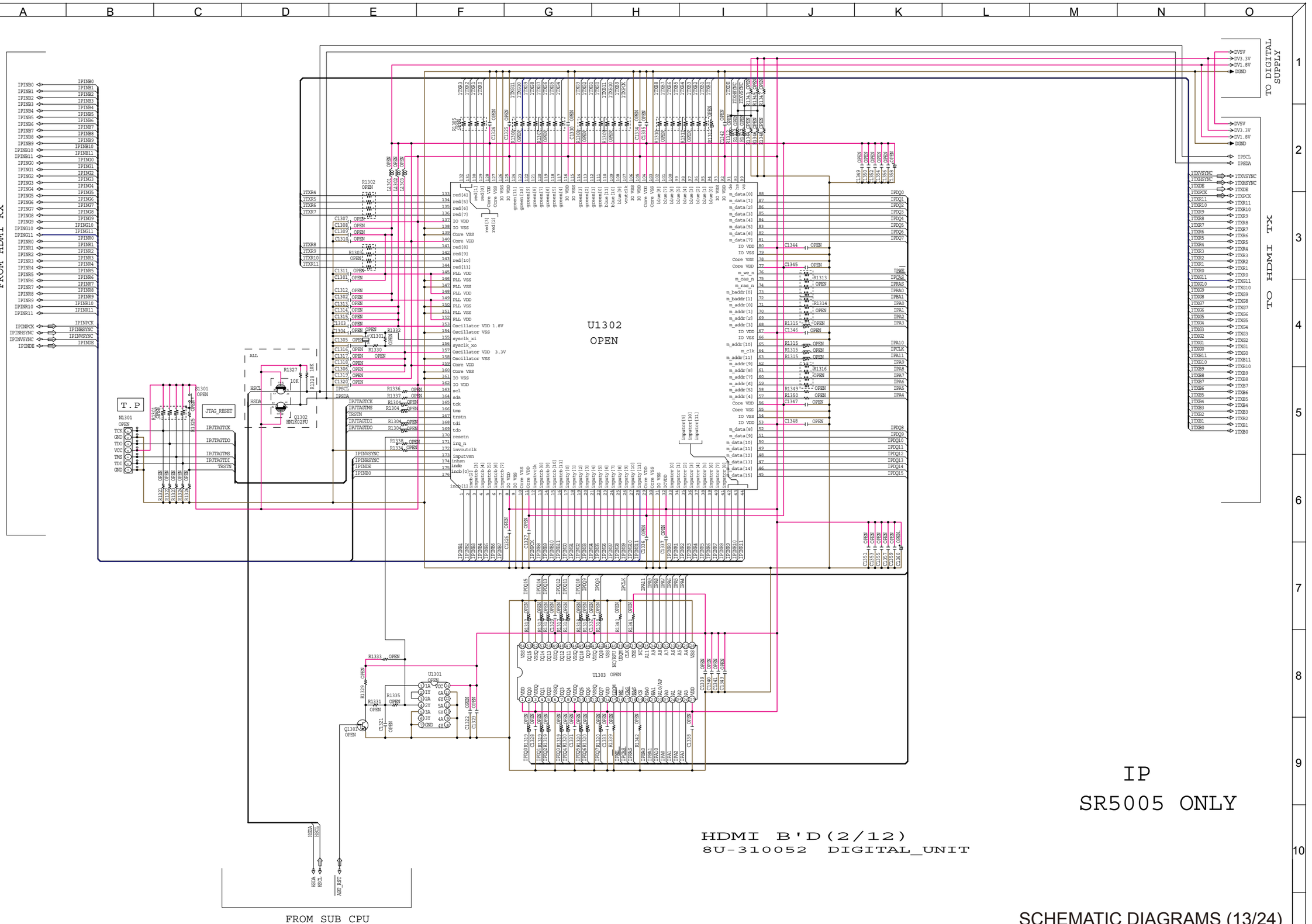

SCHEMATIC DIAGRAMS (13/24)

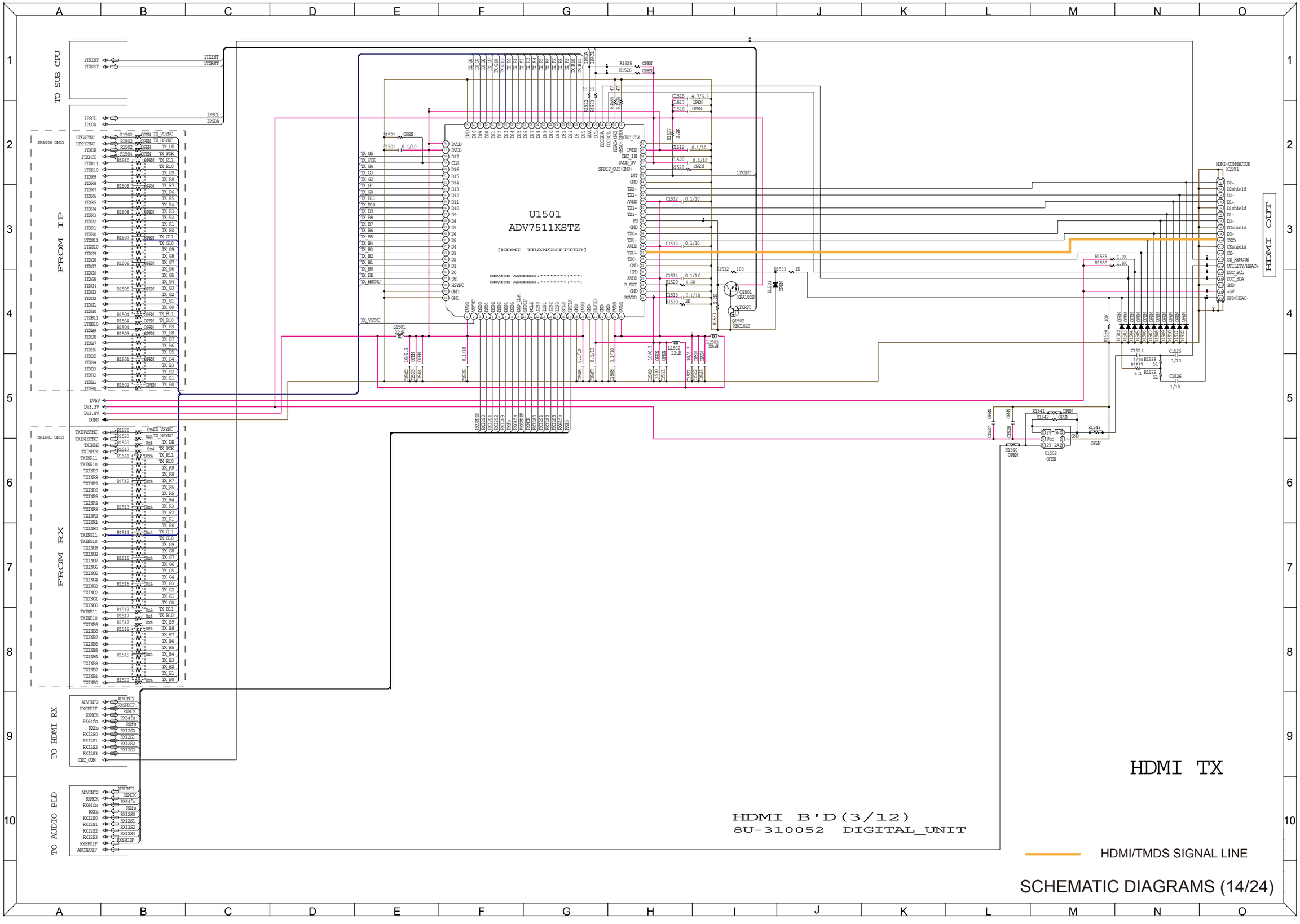
TO SUB CPU
1TXINT
1TXRST
IPSCL
IPSDA
FROM IP
SR5005 ONLY
1TXVSYNC
1TXHSYNC
1TXDE
1TXPCK
1TXR11
1TXR10
1TXR9
1TXR8
1TXR7
1TXR6
1TXR5
1TXR4
1TXR3
1TXR2
1TXR1
1TXR0
1TXG11
1TXG10
1TXG9
1TXG8
1TXG7
1TXG6
1TXG5
1TXG4
1TXG3
1TXG2
1TXG1
1TXG0
1TXB11
1TXB10
1TXB9
1TXB8
1TXB7
1TXB6
1TXB5
1TXB4
1TXB3
1TXB2
1TXB1
1TXB0
TX_VSYNC
TX_HSYNC
TX_DE
TX_PCK
TX_R11
TX_R10
TX_R9
TX_R8
TX_R7
TX_R6
TX_R5
TX_R4
TX_R3
TX_R2
TX_R1
TX_R0
TX_G11
TX_G10
TX_G9
TX_G8
TX_G7
TX_G6
TX_G5
TX_G4
TX_G3
TX_G2
TX_G1
TX_G0
TX_B11
TX_B10
TX_B9
TX_B8
TX_B7
TX_B6
TX_B5
TX_B4
TX_B3
TX_B2
TX_B1
TX_B0
DV5V
DV3.3V
DV1.8V
DGND
NR1601 ONLY
FROM RX
TXINVSYNC
TXINHSYNC
TXINDE
TXINPCK
TXINR11
TXINR10
TXINR9
TXINR8
TXINR7
TXINR6
TXINR5
TXINR4
TXINR3
TXINR2
TXINR1
TXINR0
TXING11
TXING10
TXING9
TXING8
TXING7
TXING6
TXING5
TXING4
TXING3
TXING2
TXING1
TXING0
TXINB11
TXINB10
TXINB9
TXINB8
TXINB7
TXINB6
TXINB5
TXINB4
TXINB3
TXINB2
TXINB1
TXINB0
TO HDMI RX
ADVINT2
RXSPDIF
RXMCK
RX64fs
RXfs
RXI2S0
RXI2S1
RXI2S2
RXI2S3
CEC_COM
TO AUDIO PLD
ARCSPDIF
U1501
ADV7511KSTZ
[HDMI TRANSMITTER]
DEVICE ADDRESS : ********(***)
DEVICE ADDRESS : ********(***)
HDMI-CONNECTOR
K1501
D2+
D2shield
D2-
D1+
D1shield
D1-
D0+
D0shield
D0-
TXC+
CKshield
CK-
CE_REMOTE
UTILITY/HEAC+
DDC_SCL
DDC_SDA
GND
+5V
HPD/HEAC-
HDMI OUT
U1502
OPEN
HDMI B'D(3/12)
8U-310052 DIGITAL_UNIT
HDMI TX
HDMI/TMDS SIGNAL LINE
SCHEMATIC DIAGRAMS (14/24)

TO HDMI TX

TO SUB CPU

T.P

TDIA
AUDIOPLD
TDO

N1701
7P-FFC

X1701
EXX04 (24.576MHZ)

U1706
LC89058W-E

DIR1

U1703
TC74VHCU04FT

U1707
EPM3032ATC44I0

NR1601 ONLY
K1706
RCA-107C-02(1P-OR)
COAX1

SR5005 ONLY
K1701
OPEN
COAX1
COAX2

OPT1
K1702
JSR1165

OPT2
K1703
JSR1165

SR5005 ONLY
OPTOUT
K1704
OPEN

TO
DIGITAL
CONNECT

FOPT

TO
DIGITAL
SUPPLY

DA3.3V
DA1.2V
DGND

TO DSP

TO MAINDAC

DIR/PLD

DIGITAL AUDIO SIGINAL LINE

HDMI B'D(4/12)
8U-310052 DIGITAL_UNIT

SCHEMATIC DIAGRAMS (15/24)

TO DIR/PLD

TO SUBCPU

U1901

ADSP21367KSWZ2A1184

DSP

HDMI B'D(5/12)
8U-310052 DIGITAL_UNIT

DIGITAL AUDIO SIGINAL LINE

SCHEMATIC DIAGRAMS (16/24)

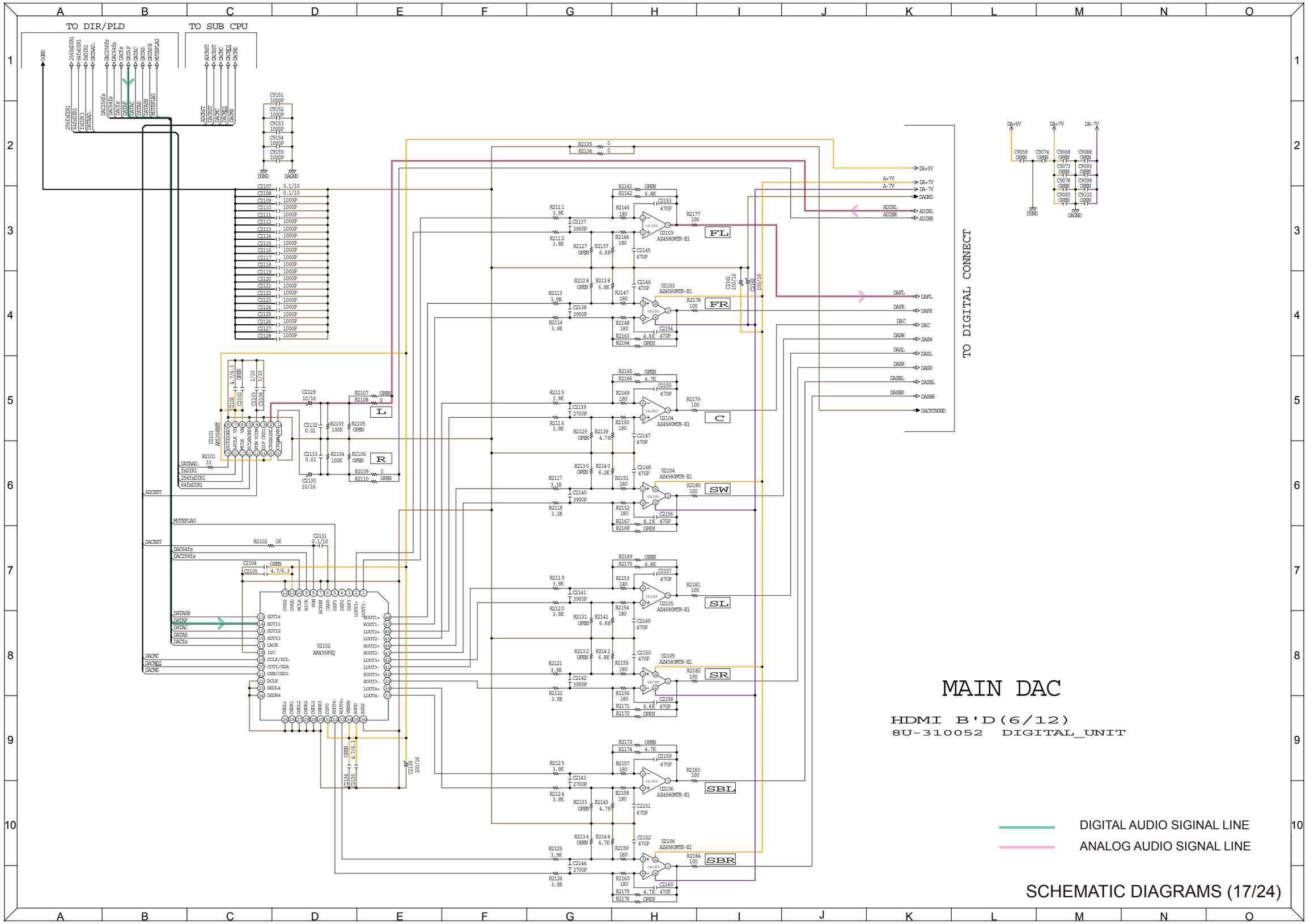
TO DIR/PLD
TO SUB CPU
TO DIGITAL CONNECT
U2102 AK4358VQ
U2101 AK5358EM
U2103 AZ4580MTR-E1
U2104 AZ4580MTR-E1
U2105 AZ4580MTR-E1
U2106 AZ4580MTR-E1
FL
FR
L
C
R
SL
SR
SBL
SBR
SW
MAIN DAC
HDMI B'D(6/12)
8U-310052 DIGITAL_UNIT
DIGITAL AUDIO SIGINAL LINE
ANALOG AUDIO SIGNAL LINE
SCHEMATIC DIAGRAMS (17/24)

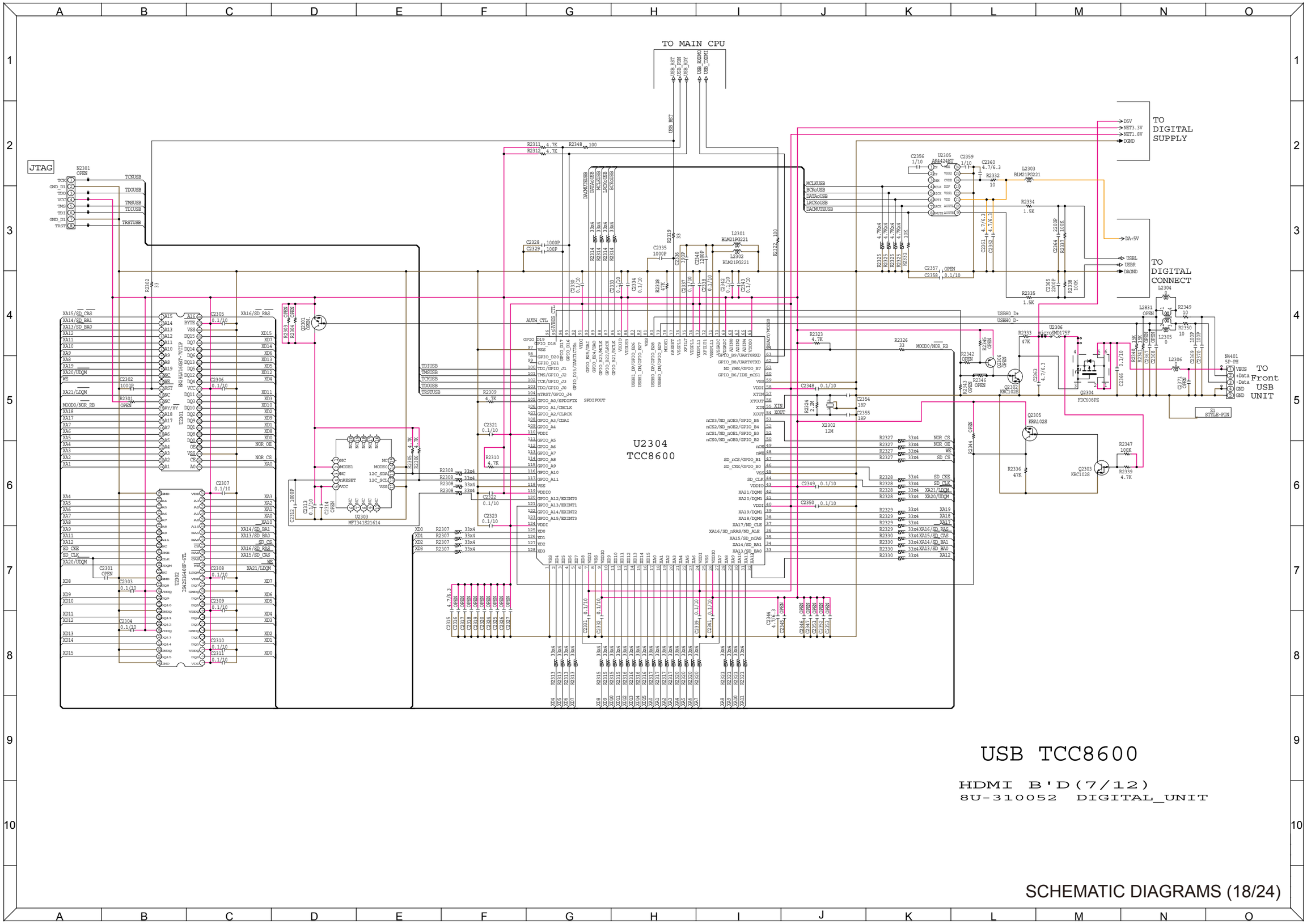

SCHEMATIC DIAGRAMS (18/24)

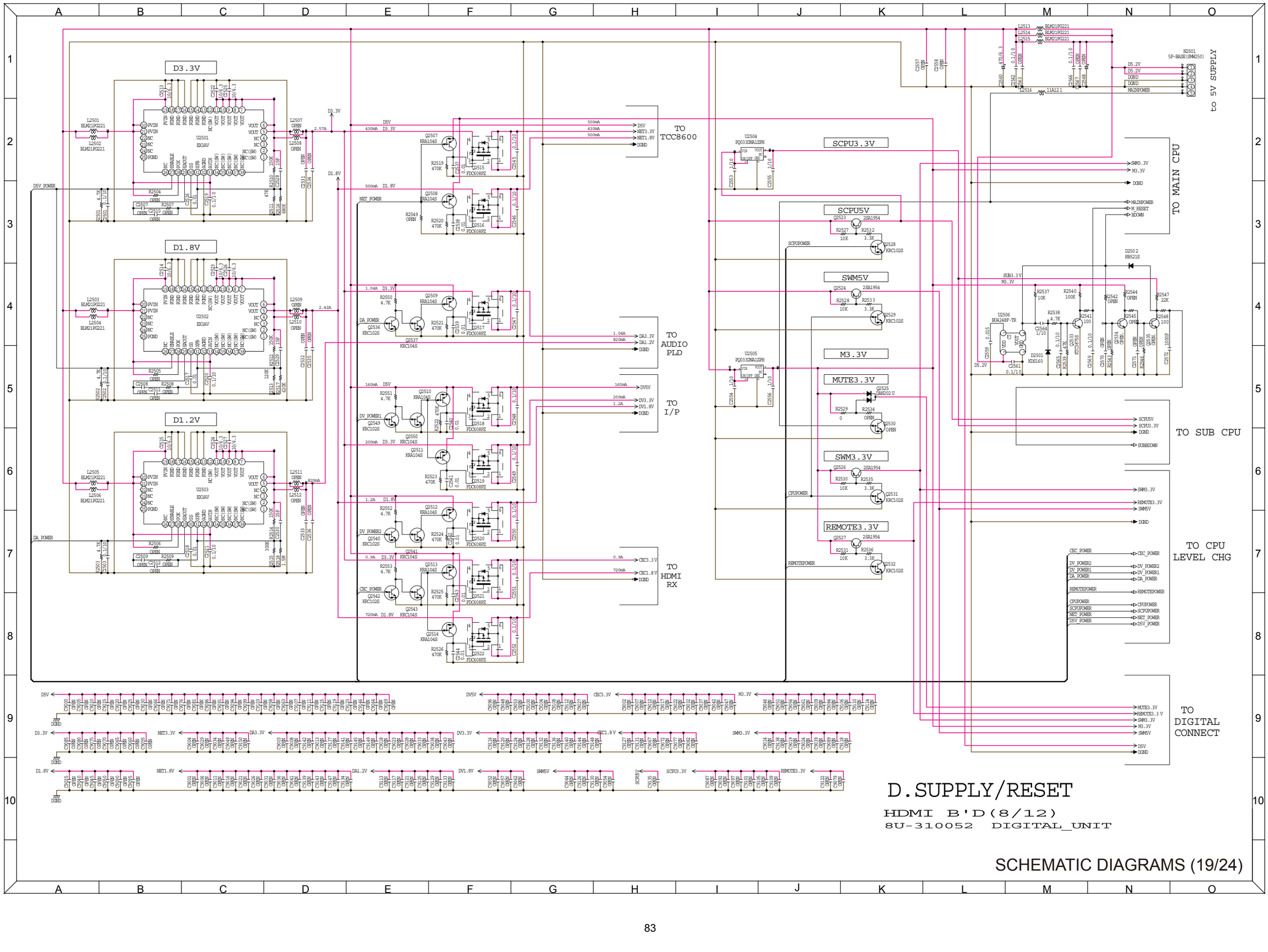
D3.3V
D1.8V
D1.2V
U2501 EXCAV
U2502 EXCAV
U2503 EXCAV
D5V_POWER
DA_POWER
NET_POWER
DV_POWER1
DV_POWER2
CBC_POWER
TO TCC8600
TO AUDIO PLD
TO I/P
TO HDMI RX
SCPU3.3V
SCPU5V
SWM5V
M3.3V
MUTE3.3V
SWM3.3V
REMOTE3.3V
SCPUPOWER
CPUPOWER
REMOTEPOWER
TO MAIN CPU
TO SUB CPU
TO CPU LEVEL CHG
TO DIGITAL CONNECT
to 5V SUPPLY
D. SUPPLY/RESET
HDMI B'D(8/12)
8U-310052 DIGITAL_UNIT
SCHEMATIC DIAGRAMS (19/24)

TO DIGITAL SUPPLY

TO HDMI RX

TO CONNECT FRONT

TO MAIN DAC

TO TCC8600

TO SIDE CONNECT

TO P.AMP

TO DIR/ PLD

TO FRONT

TO CPU LEVEL CHG

DIGITAL CONNECT

HDMI B'D(9/12)

8U-310052 DIGITAL_UNIT

ANALOG AUDIO SIGNAL LINE

SCHEMATIC DIAGRAMS (20/24)

TO DIGITAL CONNECT

TO DIGITAL SUPPLY

TO SUB CPU

TO MAIN CPU

	R2906	R2907	R2905/R2910	U2904/C2906	U2905/R2908/R2909 C2907/R2938
SR5005U	OPEN	33	OPEN	○	○
SR5005N	33	OPEN	OPEN	OPEN	○
SR5005K	OPEN	OPEN	OPEN	OPEN	OPEN
SR5005P	OPEN	OPEN	OPEN	OPEN	OPEN
NR1601U	OPEN	OPEN	OPEN	OPEN	OPEN
NR1601N	33	OPEN	OPEN	OPEN	○
NR1601P	OPEN	OPEN	OPEN	OPEN	OPEN

CPU_LEVEL_CHG

HDMI B'D(10/12)

8U-310052 DIGITAL_UNIT

SCHEMATIC DIAGRAMS (21/24)

TO_LEVEL_CHG

TO SUB CPU TO DIGITAL SUPPLY

TO TCC8600

MAIN CPU

HDMI B'D(11/12)
8U-310052 DIGITAL_UNIT

SCHEMATIC DIAGRAMS (22/24)

	R3170	R3169	R3122	R3119
NR1601U	OPEN	10K	OPEN	10K
NR1601F	OPEN	10K	10K	22K
NR1601N	OPEN	10K	10K	OPEN
SR5005U	10K	OPEN	OPEN	10K
SR5005K	10K	OPEN	10K	10K
SR5005F	10K	OPEN	10K	22K
SR5005N	10K	OPEN	10K	OPEN

TO HDMI RX

TO I/P

TO HDMI TX

TO DIGITAL SUPPLY

TO DIR/PLD

TO DSP

TO MAIN DAC

TO CPU LEVEL CHG

TO MAIN CPU

U3301
R5F3650KNFB
(SUB)

HDMI B'D(12/12)
8U-310052 DIGITAL_UNIT

SCHEMATIC DIAGRAMS (23/24)

FRONT B'D

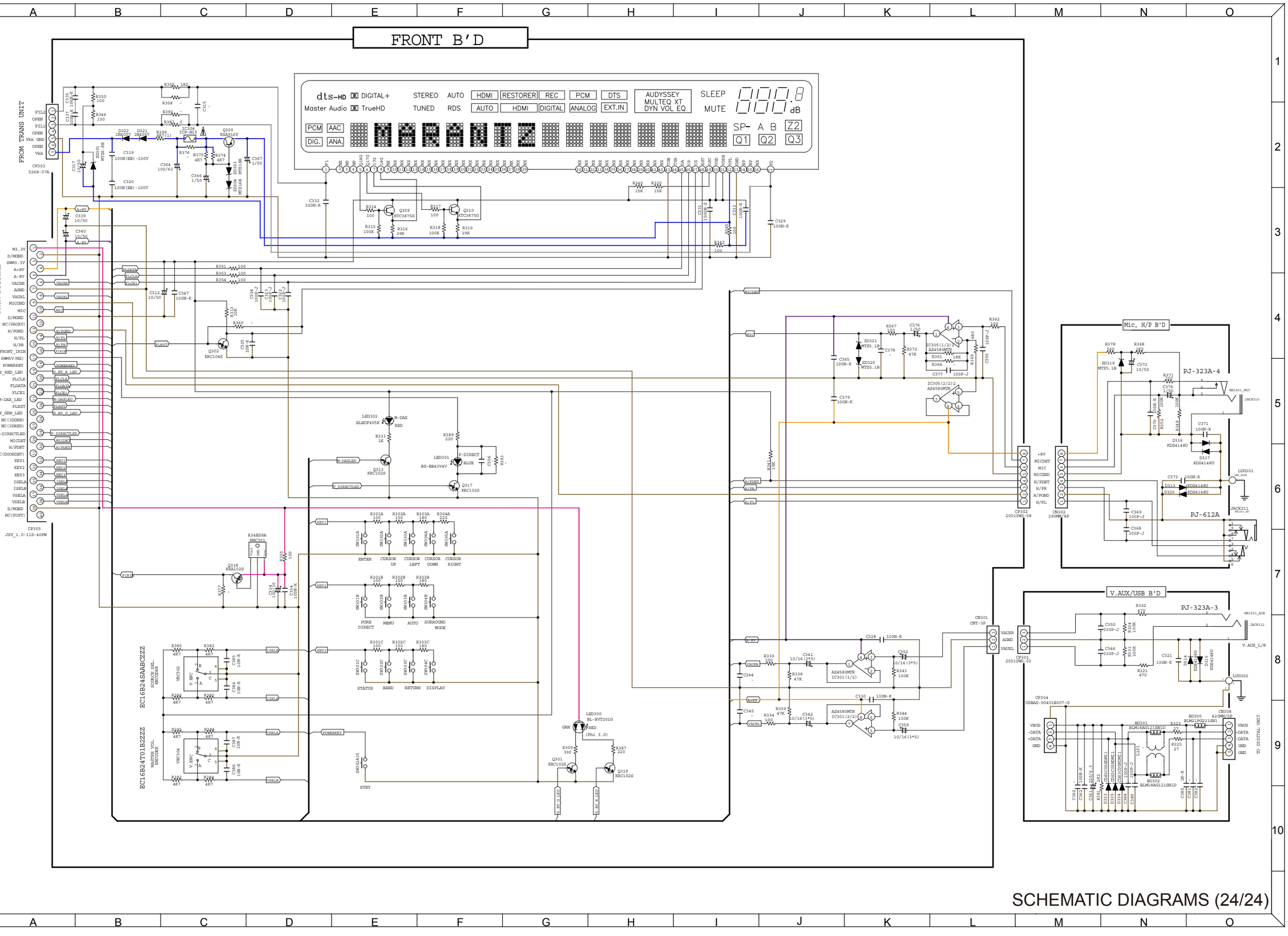

SCHEMATIC DIAGRAMS (24/24)

WIRING DIAGRAM

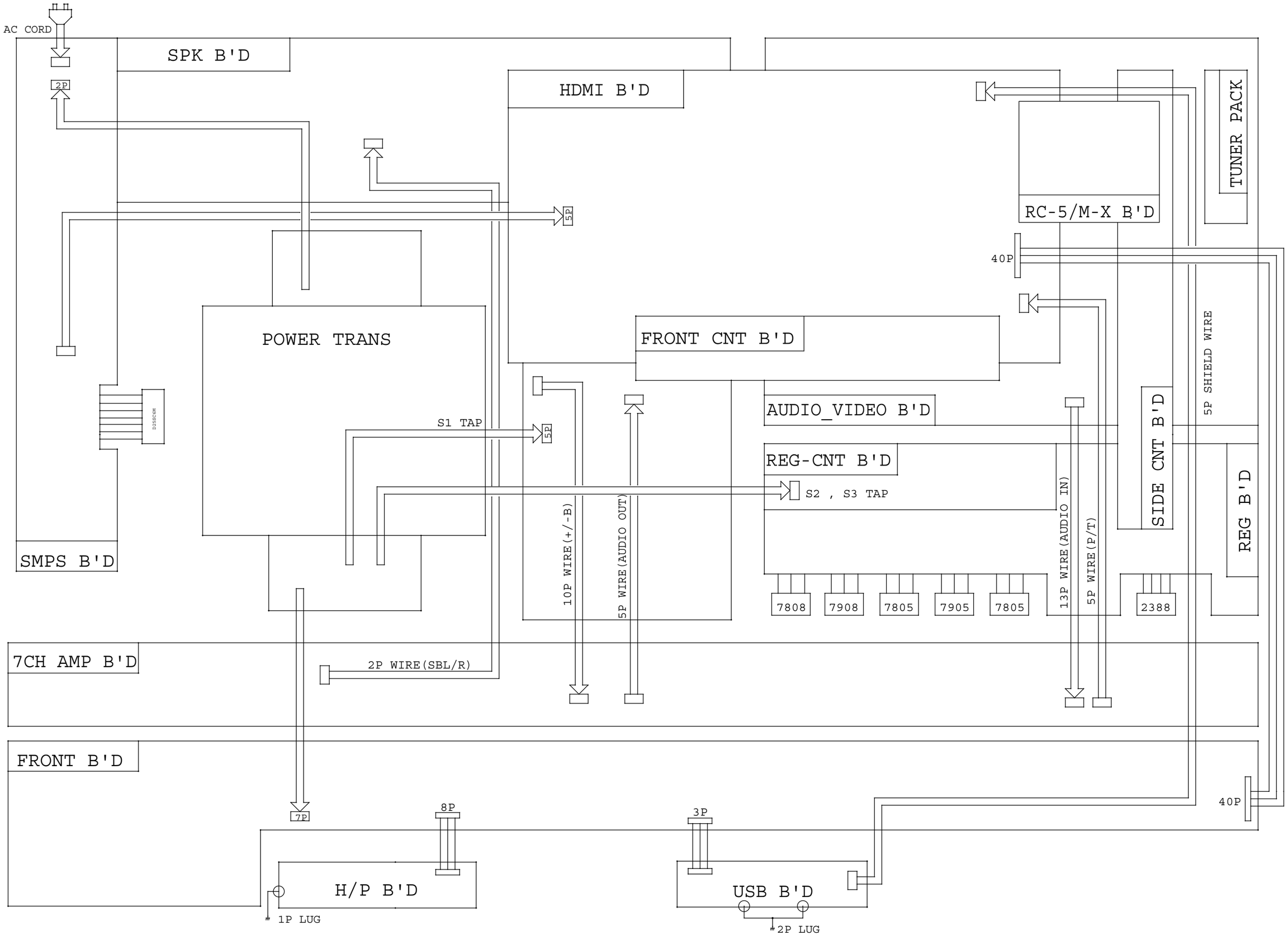

EXPLODED VIEW

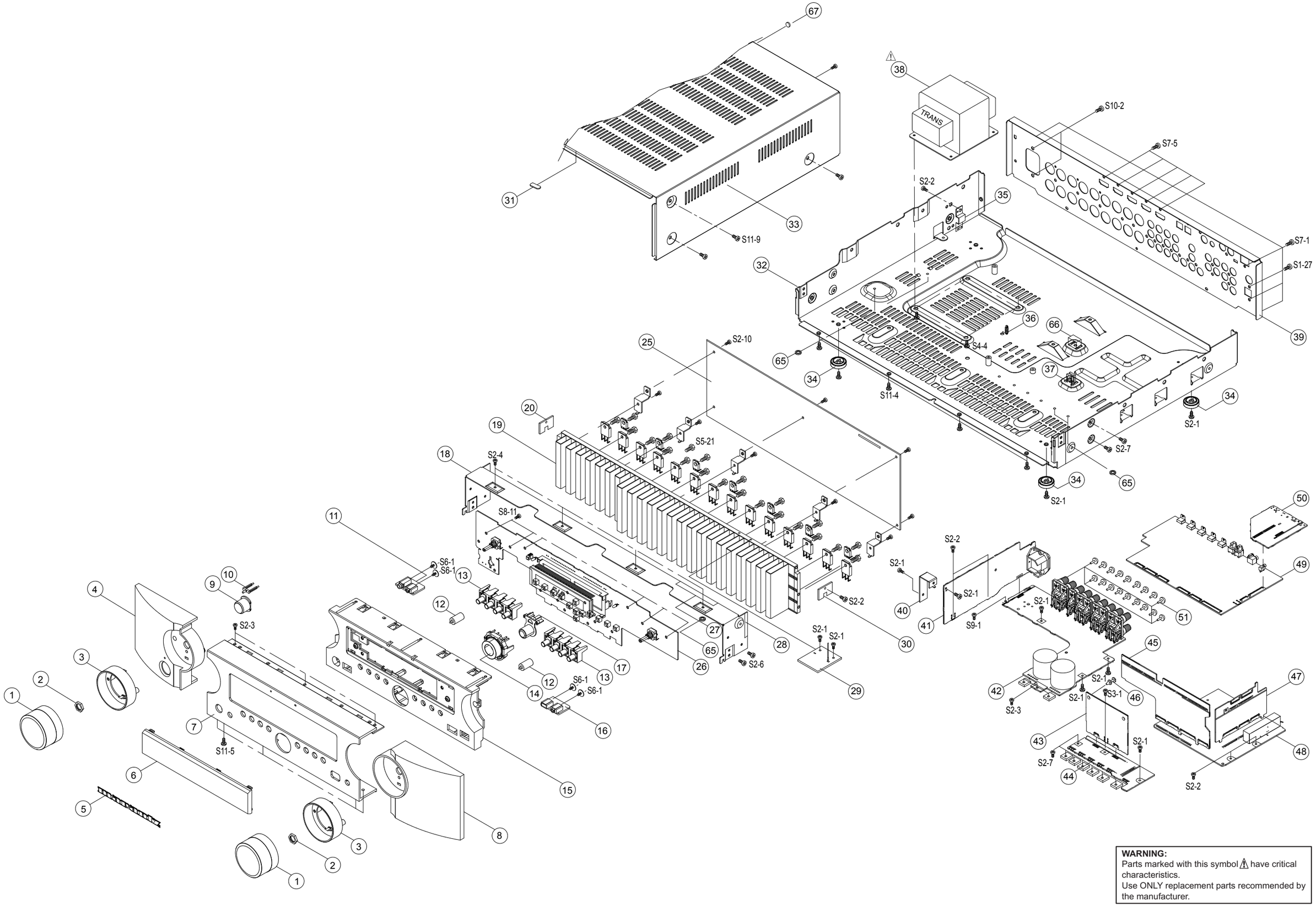

WARNING:
Parts marked with this symbol ⚠ have critical characteristics.
Use ONLY replacement parts recommended by the manufacturer.

PARTS LIST OF EXPLODED VIEW

* Parts for which "nsp" is indicated on this table cannot be supplied.
* P.W.B. ASS'Y for which "nsp" is indicated on this table cannot be supplied. When repairing the P.W.B. ASS'Y, check the board parts table and order replacement parts.
* Part indicated with the mark " ★ " is not illustrated in the exploded view.
* The parts listed below are for maintenance only, might differ from the parts used in the unit in appearances or dimensions.

Note: The symbols in the column "Remarks" indicate the following destinations.
U : North America model
B : Black model
N : Europe model
SG : Silver gold model

	Ref.No.	Part No.	Part Name	Remarks		Q'ty	New
	25	nsp	PCB 7CH_AMP ASSY	N1B	7025HK0928040		*
	25	nsp	PCB 7CH_AMP ASSY	N1SG	7025HK0928030		*
	25	nsp	PCB 7CH_AMP ASSY	U1B	7025HK0928010		*
	42A	nsp	PCB SPK ASSY	N1B	7025HK0928041		
	42A	nsp	PCB SPK ASSY	N1SG	7025HK0928031		
	42A	nsp	PCB SPK ASSY	U1B	7025HK0928011		
	41	-	PCB SMPS				
	42	-	PCB SPK				
	44A	nsp	PCB REG_CNT ASSY	N1B	7025HK0928042		*
	44A	nsp	PCB REG_CNT ASSY	N1SG	7025HK0928032		*
	44A	nsp	PCB REG_CNT ASSY	U1B	7025HK0928012		*
	20	-	PCB GUIDE_L				
	29	-	PCB GUIDE_H/S				
	30	-	PCB GUIDE_R				
	43	-	PCB REG_CNT				
	44	-	PCB REG				
	45	-	PCB FRONT_CNT				
	47	-	PCB SIDE_CNT				
	50	-	PCB RC-5/M-X				
	26A	nsp	PCB FRONT ASSY	N1B	7025HK0928043		*
	26A	nsp	PCB FRONT ASSY	N1SG	7025HK0928033		*
	26A	nsp	PCB FRONT ASSY	U1B	7025HK0928013		*
	11	-	PCB H/P				
	16	-	PCB USB				
	26	-	PCB FRONT				
	48	nsp	PCB AUDIO_VIDEO ASSY	N1B	7025HK0928044		
	48	nsp	PCB AUDIO_VIDEO ASSY	N1SG	7025HK0928034		
	48	nsp	PCB AUDIO_VIDEO ASSY	U1B	7025HK0928014		
	49	8U6331006400M	PCB HDMI ASSY	N1B	7025HK0928045		
	49	-	PCB HDMI ASSY	N1SG	7025HK0928035		
	49	-	PCB HDMI ASSY	U1B	7025HK0928016		

NOTE :
Please change the destination-resistors when changing 1601N1B (8U6331006400M) to other destination.
Please refer to destination-resistors 85,86 page.
(SCHEMATIC DIAGRAMS : 21/24, 22/24)

	U2905(21/24)	C2907(21/24)	R2906(21/24)	R2908(21/24)	R2909(21/24)	R2938(21/24)	R3119(22/24)	R3122(22/24)
1601N1B	TC74VHC08FT	0.1/10	33	33	33	470K	OPEN	10K
1601N1SG	OPEN	OPEN	33	33	33	470K	OPEN	10K
1601U1B	OPEN	OPEN	OPEN	OPEN	OPEN	OPEN	10K	OPEN

	Ref.No.	Part No.	Part Name	Remarks		Q'ty	New
	1	963412005880S	VOLUME KNOB ASSY(KD)	U1B,N1B	5088212028000SZ	2	
	1	963412005890S	VOLUME KNOB ASSY(KD)	N1SG	5088212028010SZ	2	
	2	-	NUT		-	2	
	3	963419006180M	RING KNOB	U1B,N1B	5127210901000S	2	
	3	963419006190M	RING KNOB	N1SG	5127210901100S	2	
	4	963402011970M	PANEL FRONT(L)	U1B,N1B	3067214571020S	1	*
	4	963402011980M	PANEL FRONT(L)	N1SG	3067214571210S	1	*
	5	963421006200M	BADGE(MARANTZ) SILVER/GRAY		5630210678000S	1	
	6	963416011990M	WINDOW DISPLAY(ACRYL RED WINE)		5077212733010S	1	*
	7	963402011640M	FRONT PANEL	U1B,N1B	3067214468100S	1	*
	7	963402011650M	FRONT PANEL	N1SG	3067214468120S	1	*
	8	963402006020M	FRONT PANEL(R)	U1B,N1B	3067214561000S	1	
	8	963402006030M	FRONT PANEL(R)	N1SG	3067214561200S	1	
	9	963411006110M	BUTTON POWER	U1B,N1B	5090213961000S	1	
	9	963411012000M	BUTTON POWER	N1SG	5097213961100S	1	*
	10	963481006080M	LENS STANDBY		3710210873000S	1	
	12	963481006070M	LENS HDMI		3710210843000S	2	
	13	963411006100M	BUTTON 4KEY	U1B,N1B	5090213861000S	2	
	13	963411006120M	BUTTON 4KEY	N1SG	5097213861100S	2	
	14	963411006130M	BUTTON ENTER-2	U1B,N1B	5097213871000S	1	
	14	963411006140M	BUTTON ENTER-2	N1SG	5097213871100S	1	
	15	nsp	FRAME PANEL	U1B,N1B	3417210211000S	1	
	15	nsp	FRAME PANEL	N1SG	3417210211100S	1	
	17	963411006150M	BUTTON ENTER-1	U1B,N1B	5097213911000S	1	
	17	963411006160M	BUTTON ENTER-1	N1SG	5097213911100S	1	
	18	nsp	FRONT BRACKET		4010214156000S	1	
	19	nsp	HEAT SINK MAIN		2120211838000S	1	*
	★ 21	00D9960018706	TR 2SB1560-Y	Q410,Q422,Q434,Q446, Q458,Q470,Q482	J5011560Y0000S	1	
	★ 22	963219003340S	TR KTC3964/TO126S-BULK	Q409,Q421,Q433,Q445, Q457,Q469,Q481	J502396400010S	1	
	★ 23	00D9960018706	TR 2SD2390-Y	Q404,Q416,Q428,Q440, Q452,Q464,Q476	J5032390Y0000S	1	
	24	nsp	BRACKET HEAT SINK		4010056906010S	5	
	27	nsp	ACETATE CLOTH TAPE D-XW33(J)		1220210129300S	1	
	28	nsp	ACETATE CLOTH TAPE DMS3		1220210059020S	2	
	31	nsp	CABINET SHEET		1210210235000S	1	
	32	nsp	CHASSIS MAIN		3200213586000S	1	*
	33	963403012010M	TOP COVER	U1B,N1B	3007211786000S	1	*
	33	963403012020M	TOP COVER	N1SG	3007211786010S	1	*
	34	00M46BW057210	FOOT FRONT		4007210321000S	4	
	35	nsp	BRACKET SIDE		4010210686000S	1	
	36	nsp	SUPPORTER P.C.		4070210192000S	1	
	37	nsp	SUPPORTER PCB		4070001601010S	1	
⚠	38	963101011620M	POWER TRANS MAIN	N1B,N1SG	8200858630390S	1	*
⚠	38	963101011610M	POWER TRANS MAIN	U1B	8200858630370S	1	*
	39	nsp	CHASSIS BACK	U1B	3207213576100S	1	*
	39	nsp	CHASSIS BACK	N1B,N1SG	3207213576020S	1	*
	40	nsp	BRACKET SMPS		4010214886000S	1	
	46	nsp	SPACER CARD		4300210062000S	1	
	51	nsp	BUSHING TERMINAL	N1B,N1SG	2410040353010S	18	
	★ 60	nsp	TAPE INLET		1220210759000S	1	
	★ 61	963606010490S	CABLE,FLAT CARD 1.0MM		N711402912480S	1	

	Ref.No.	Part No.	Part Name	Remarks		Q'ty	New
	★ 62	nsp	CUSHION FOOT		4050211175000S	4	
	★ 63	nsp	CLAMP CABLE		4330040343010S	9	
	★ 64	nsp	CLAMP WIRE(MTG)		4330000310000S	2	
	65	nsp	CUSHION SCREW		4050213025000S	5	
	66	nsp	CUSHION MD DOOR		4050212005000S	1	
	67	nsp	MASK		41951001200AM	1	
	★ 68	nsp	SHEET RATING CHASSIS		1210211269000S	1	
SCREWS							
	S1	nsp	SCREW (+2S 3*10 B-TYPE(DOT) BK/BH)		B020030103B11S	27	
	S2	nsp	SCREW (+2S 3*8(ROUND) BK/BH)		B020230083B10S	60	
	S3	nsp	SCREW (3X18 B-TYPE ZNW/BH)		B020030181B10S	1	
	S4	nsp	SCREW (+3S 4*10 P+S-WASHER(ROUND)BK/BH)		B028940101B11S	4	
	S5	nsp	SCREW (2S 3*14 P(Φ6)+S-WASHER ZNY/HH)		B018230141H11S	21	
	S6	nsp	SCREW (+2S 3*8 ZnY WASHER PI12)		1500001456010S	4	
	S7	nsp	SCREW (+M 3*6 BK/BH)		B000030063B10S	6	
	S8	nsp	SCREW (+2S 3*8 B-TYPE ZNW/BH)		B020030081B10S	12	
	S9	nsp	SCREW (+2S 3*5 ZNW/BH)		B020030051B10S	1	
	S10	nsp	SCREW (+2S 4*8 B-TYPE(DOT) BK/BH)		1500040083B10S	2	
	S11	nsp	SCREW (+2S 3*8(ROUND) BK/BH)	U1B,N1B	B020230083B10S	17	
	S11	nsp	SCREW (+2S 3*8 B-TYPE NI/BH)	N1SG	B020030084B10S	17	
	★ S12	nsp	TOOTHED WASHER		1530210126000S	1	

Personal notes:

PACKING VIEW

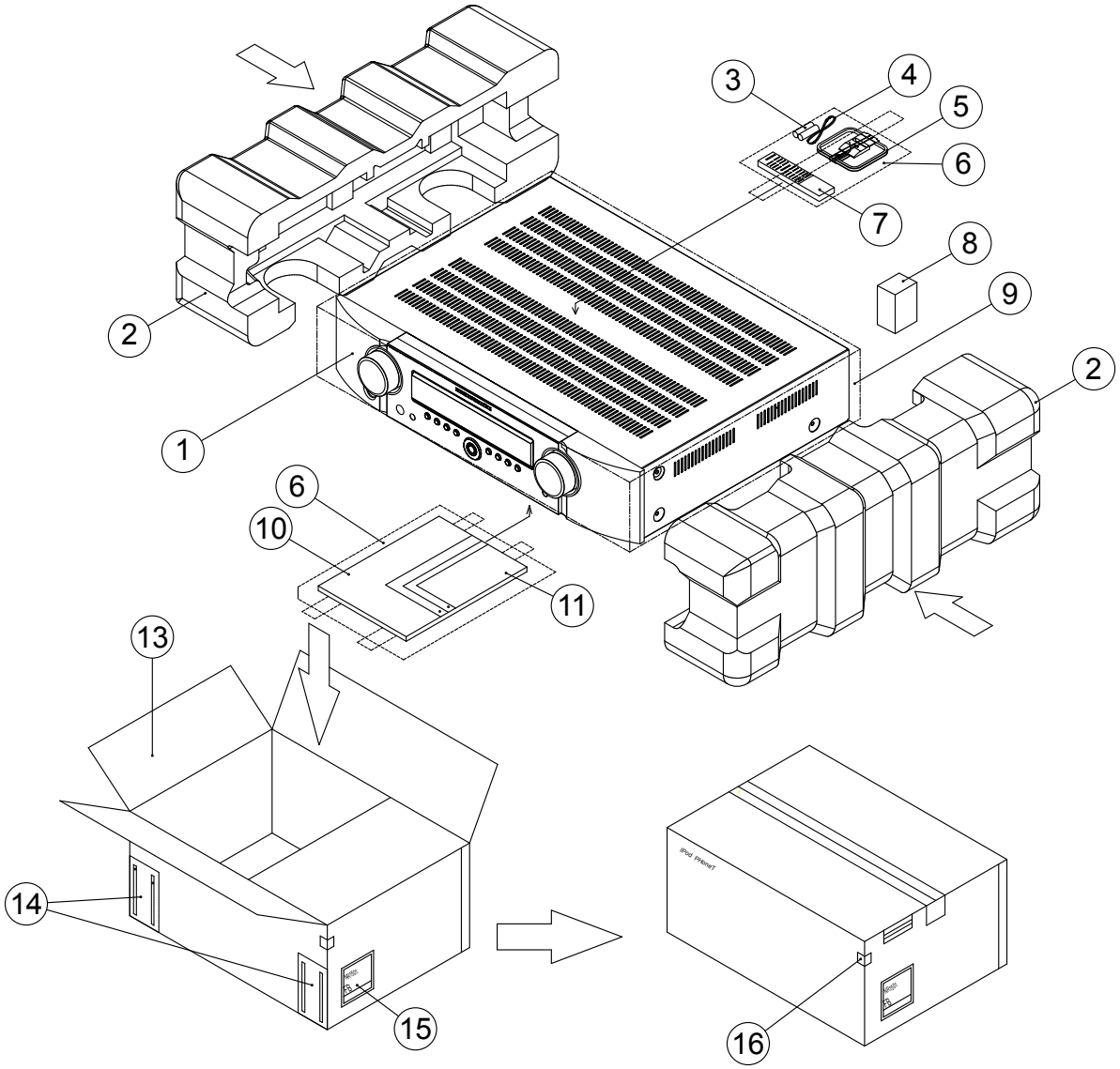

PARTS LIST OF PACKING & ACCESSORIES

* Parts for which "nsp" is indicated on this table cannot be supplied.
* Part indicated with the mark " ★ " is not illustrated in the exploded view.
* The parts listed below are for maintenance only, might differ from the parts used in the unit in appearances or dimensions.

Note: The symbols in the column "Remarks" indicate the following destinations.
U : North America model N : Europe model
B : Black model SG : Silver gold model

	Ref.No.	Part No.	Part Name	Remarks		Q'ty	New
	1	-	set		-	1	
	2	963533005950M	CUSHION SNOW		6230212634000S	1	
	3	nsp	BATTERY DRY		G670001R50210S	2	
	4	00D9600187308	ANTENNA WIRE (FM)		E605010070001S	1	
	5	90M-ZA000260R	ANTENNA LOOP WIRE 9.5UH		E601016000010S	1	
	6	nsp	POLY BAG		6337040062010S	2	
	7	307010076002M	REMOCON RC-010SR		8300010000010S	1	*
	8	324810004004M	SETUP MIC	AUDYSSEY MIC ACM1H	M0400003100605	1	
	9	nsp	PE SHEET		6327040059000S	1	
	10	541110480028M	INSTRUCTION MANUAL	U1B	5707000004130S	1	*
	10	541110480035M	INSTRUCTION MANUAL -1	N1B,N1SG	5707000004150S	1	*

	Ref.No.	Part No.	Part Name	Remarks		Q'ty	New
	10	541010595006M	INSTRUCTION MANUAL -2	N1B,N1SG	5707000004680S	1	*
	11	nsp	WARRANTY CARD	U1B	5727000000111S	1	
	11	nsp	WARRANTY CARD (Canada)	U1B	5727041650142S	1	
⚠	★ 12	90M-ZC000600R	CORD ASSY	N1B,N1SG	L068250160020S	1	
⚠	★ 12	90M-ZC000470R	CORD ASSY	U1B	L068125130010S	1	
	13	963531012030M	BOX GIFT		6007211420010S	1	*
	14	nsp	BOX PAD		6240210840000S	2	
	15	nsp	SHIPPING LABEL		5507000007000S	1	
	16	nsp	LABEL COLOR	N1SG	5507000004600S	2	

SEMICONDUCTORS

Only major semiconductors are shown, general semiconductors etc. are omitted to list.
The semiconductor which described a detailed drawing in a schematic diagram are omitted to list.

1. IC's

R5F64169DFD (HDMI :U3102)

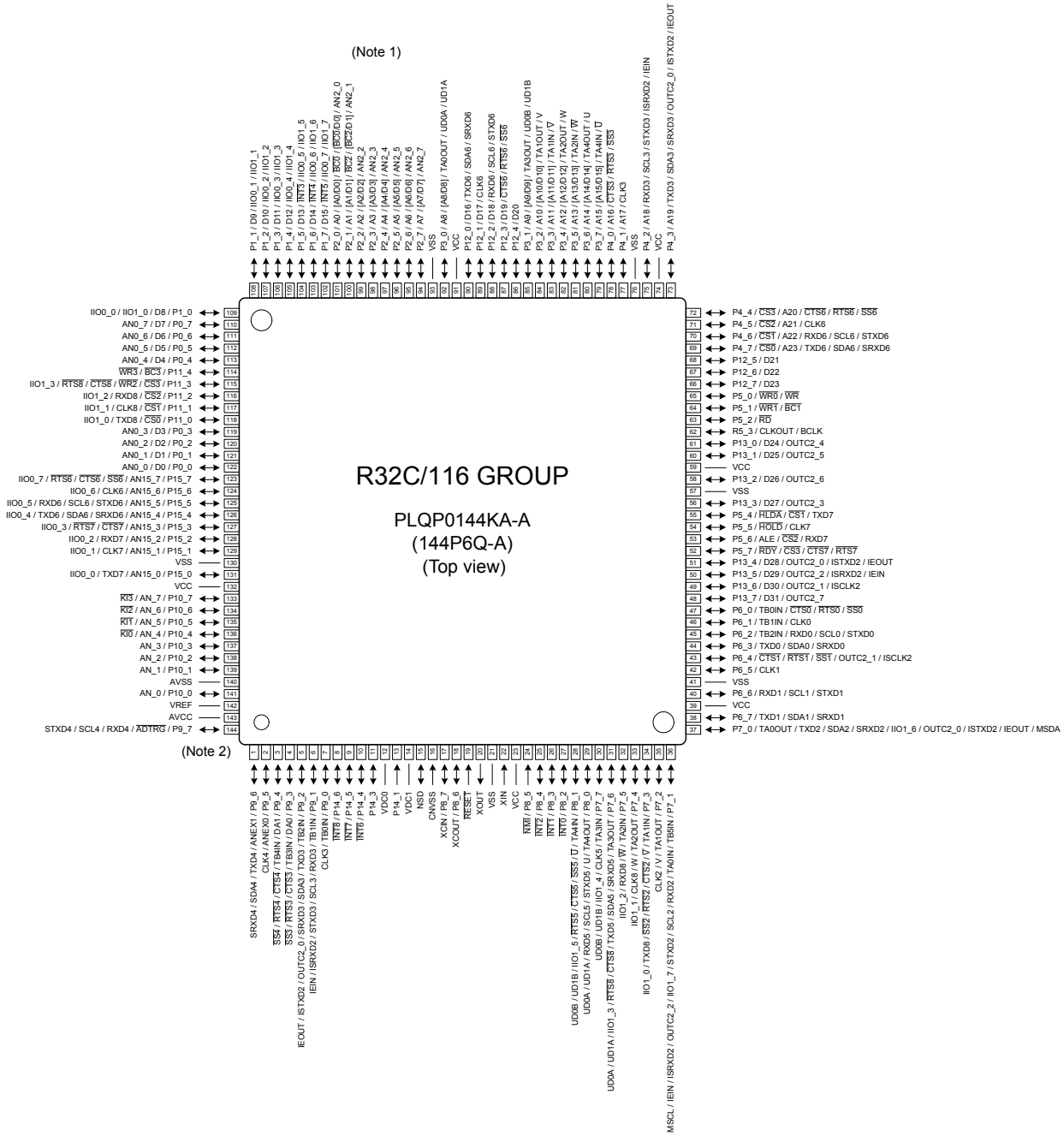

Notes:
1. Pin names in brackets [ ] represent a functional signal as a whole and should not be considered as two separate pins.
2. The position of pin number 1 varies by product. Refer to the index mark in attached “Package Dimensions”.

R5F64169DFD Terminal Functions

Pin	Pin Name	Synbol	I/O	Type	Pullup	Lv Cnv	STBY	stop	Function
1	P96/(TXD4)	SIRIUS RST(U)	O	C	-	3/5	O/L	O/L	Terminal for SIRIUS control(U)
2	P95/(CLK4)	HDRADIO RST/TU RST/ST IND	O	C	-	-	O/L	O/L	HDRADIO/TUNER KST-MW/KST-MT control
3	P94/($\overline{CTS4}$)/TB4IN	RC IN	O/(I)	C	/M3.3	-	I	I	RC-5 input terminal
4	P93/($\overline{CTS3}$)/TB3IN	FLASHER IN	O/(I)	C	/Pd	-	I	I	FLASHER input terminal
5	P92/TXD3/SDA3	HDRADIO MOHI/TU SDIO/TU SDA	O	C	-	-	O/L	O/L	HDRADIO/TUNER KST-MW/KST-MT control
6	P91/RXD3/SCL3	HDRADIO MIHO/TU SCLK/TU SCL	I/(0)	-/C	-	-	O/L	O/L	HDRADIO/TUNER KST-MW/KST-MT control
7	P90/(CLK3)	USB POWER	O	C	-	-	O/L	O/L	USB(TELECHIPS) POWER control terminal
8	P146/$\overline{INT8}$	$\overline{POWER\ KEY}$	I	-	M3VPu	-	I	I	POWER KEY (WAIT MODE cancel, interrupt port)
9	P145/$\overline{INT7}$	REQ SOMI	I	-	-	-	I	O/L	MAIN-SUB u-com communication control output terminal
10	P144/($\overline{INT6}$)	MAIN POWER	O	C	-	-	O/L	O/L	MAIN POWER control terminal
11	P143	CPU POWER	O	C	-	-	O/L	O/L	Terminal for MAIN CPU POWER control(POWER ON="H") CEC ON : STANDBY ="H")
12	VDC0	VDC0	-	-	-	-	-	-	Smoothing capacitor connection terminal
13	P141 INPUT ONLY	NC	I	-	Pd	-	-	-	NC
14	VDC1	VDC1	-	-	-	-	-	-	Smoothing capacitor connection terminal
15	NSD	NSD	-	-	M3VPu	-	-	-	Emulator communication pin
16	CNVss	CNVSS	-	-	Pd	-	-	-	Single-chip / Micro-processor mode switching (Normal single-chip : L, Rewrite boot program start : H input set)
17	P87/(XCIN)	USB RESET	O	C	-	-	O/L	O/L	USB(TELECHIPS) POWER control terminal
18	P86/(XCOUT)	REMOTE POWER(232C)	O	C	-	-	O/L	O/L	Terminal for 232C POWER control(ON="H")
19	$\overline{RESET}$	$\overline{RESET}$	-	-	M3VPu	-	-	-	Reset input(Reset ="L")
20	XOUT	X2	-	-	-	-	-	-	Clock output
21	VSS	VSS	-	-	-	-	-	-	GND
22	XIN	X1	-	-	-	-	-	-	Clock input
23	VCC	VCC1	-	-	-	-	-	-	+3V
24	P85/($\overline{NMI}$)	NC	I	-	Pd	-	I	I	NC
25	P84/$\overline{INT2}$	PLDAERR	I	-		-	O/L	O/L	PLD ERROR detection
26	P83/$\overline{INT1}$	$\overline{B.DOWN}$	I	-	M3VPu	-	I	I	Power failure detect(Power failure ="L")
27	P82/$\overline{INT0}$	WAKE UP	I	-	Pd	-	I	I	CPU Wakeup(RC IN)
28	P81	D5V POWER	O	C	-	-	O/L	O/L	Digital 5V power supply control terminal
29	P80/RXD5	KILL IR	I/O	-/C	(3Vin)/	5/3	O/L	O/L	Control terminal for/Front IR Disable
30	P77/(CLK5)	FL DATA	O	C	-	-	O/L	O/L	FL control terminal
31	P76/TXD5	FL CE2	O	C	-	3/5	O/L	O/L	FL control order terminal
32	P75/RXD8	SIRIUS MI(U)	I	-	(3Vin)	5/3	O/L	O/L	Terminal for SIRIUS control (U)
33	P74/(CLK8)/TA2OUT	RC OUT	O	C	-	-	O/L	O/L	RC-5 output terminal
34	P73/TXD8	SIRIUS MO(U)/RDS DATA(N)	O/I	C/N		3/5	O/L	O/L	Terminal (U)/RDS control for SIRIUS control (N)
35	P72/(CLK2)	OSD CLK	O	C	-	3/5	O/L	O/L	OSD control terminal (LC74781)
36	P71/(RXD2)	OSD OE	O	C	-	3/5	O/L	O/L	OSD control terminal (LC74781)
37	P70/(TXD2)	OSD DATA	O	C	-	3/5	O/L	O/L	OSD control terminal (LC74781)
38	P67/TXD1	TXD MO232I	O	C	-	-	O/L	O/L	Data transfer to external terminal(AMX)/MITSUBISHI writer rewrite
39	VCC	VCC1	-	-	-	-	-	-	+3V
40	P66/RXD1	RXD MI232O	I	-	-	-	I	O/L	Data received from the external terminal(AMX)/MITSUBISHI writer rewrite
41	VSS	VSS	-	-	-	-	-	-	GND
42	P65/(CLK1)/SCLK(L)	FL CLK	O	C	Pd	-	O/L	O/L	FL control order terminal
43	P64/(BUSY)	FL CE1	O	C	-	-	O/L	O/L	FL control order terminal
44	P63/TXD0	USB RXDMO	O	C	-	-	O/L	O/L	USB(TELECHIPS) control terminal
45	P62/RXD0	USB TXDMI	I	-	-	-	I	O/L	USB(TELECHIPS) control terminal
46	P61/(CLK0)	FL RST	O	C	-	-	O/L	O/L	FL control order terminal
47	P60/($\overline{CTS0}$)/TB0IN	NC	I	-	Pd	-	-	-	NC
48	P137	ACK SIMO	O	C	-	-	O/L	O/L	MAIN-SUB µcom communication control output terminal
49	P136/ISCLK2	CLK SIMO	O	C	-	-	O/L	O/L	MAIN-SUB µcom communication control output terminal
50	P135/ISRXD2	SOMI	I	-	-	-	I	O/L	MAIN-SUB µcom communication control output terminal
51	P134/ISTXD2	MOSI	O	C	-	-	O/L	O/L	MAIN-SUB µcom communication control output terminal
52	P57/($\overline{RDY}$)	NC	I	-	Pd	-	-	-	NC
53	P56/(ALE)	NC	I	-	Pd	-	-	-	NC
54	P55/($\overline{HOLD}$)/EPM	$\overline{FRASH\ EPM}$	I	-	M3VPu	-	-	-	Rewrite boot program start : L input set
55	P54/($\overline{HLDA}$)	NC	I	-	Pd	-	-	-	NC
56	P133	NC	I	-	Pd	-	-	-	NC
57	VSS	VSS	-	-	-	-	-	-	GND
58	P132	NC	I	-	Pd	-	-	-	NC
59	VCC	VCC2	-	-	-	-	-	-	+3V
60	P131	RST SUB	O	C	-	-	O/L	O/L	Output for reset of sub-µcom
61	P130	SCPU POWER	O	C	-	-	O/L	O/L	SUB CPU POWER ON/OFF switch("H"=ON)
62	P53/(BCLK)	NC	I	-	Pd	-	-	-	NC

Pin	Pin Name	Synbol	I/O	Type	Pullup	Lv Cnv	STBY	stop	Function
63	P52/($\overline{RD}$)	NC	I	-	Pd	-	-	-	NC
64	P51/($\overline{WR1}$)/(BC1)	NC	I	-	Pd	-	-	-	NC
65	P50/($\overline{WR0}$)/(WR)/CE	CE	I	-	Pd	-	-	-	Rewrite boot program start : H input set
66	P127	VSEL A	I	-	SW3VPu	-	I	I	Master Volume rotation detect input (Rotary encoder)
67	P126	VSEL B	I	-	SW3VPu	-	I	I	Master Volume rotation detect input (Rotary encoder)
68	P125	232C CONTROL(SUB LOG MODE)	O	C	-	-	O/L	O/L	SUB LOG MODE : For 232C route switch control
69	P47/$\overline{CS0}$/(A23)	NC	I	-	Pd	-	-	-	NC
70	P46/($\overline{CS1}$)/(A22)	NC	I	-	Pd	-	-	-	NC
71	P45/($\overline{CS2}$)/(A21)	NC	I	-	Pd	-	-	-	NC
72	P44/($\overline{CS3}$)/(A20)	NC	I	-	Pd	-	-	-	NC
73	P43/(A19)	OSD PAL_NTSC	O	C	-	3/5	O/L	O/L	OSD PAL_NTSC switch control
74	VCC	VCC	-	-	-	-	-	-	+3V
75	P42/(A18)	NC	I	-	Pd	-	-	-	NC
76	VSS	VSS	-	-	-	-	-	-	GND
77	P41/(A17)	NC	I	-	Pd	-	-	-	NC
78	P40/(A16)	$\overline{PROTECTION(THERMAL A)}$	I	-	SW3VPu	-	I	I	PROTECTION detection terminal (THERMAL_A)
79	P37/(A15)	$\overline{PROTECTION(THERMAL B)}$	I	-	SW3VPu	-	I	I	PROTECTION detection terminal (THERMAL_B)
80	P36/(A14)	$\overline{PROTECTION(DC DET)}$	I	-	SW3VPu	-	I	I	PROTECTION detection terminal (ASO)
81	P35/(A13)	$\overline{PROTECTION (ASO)}$	I	-	SW3VPu	-	I	I	PROTECTION detection terminal (DC)
82	P34/(A12)	T.MUTE	O	C	-	-	O/L	O/L	ANALOG TUNER MUTE/HDRADIO MUTE control(MUTE="L")
83	P33/(A11)	NC	I	-	-	-	O/L	O/L	NC
84	P32/(A10)	TU_SEN	O	C	-	-	O/L	O/L	TUNER KST-MW/KST-MT control
85	P31/(A9)	H/P DET	I	-	SW3VPu	-	O/L	O/L	Headphone detection terminal
86	P124	NC	I	-	Pd	-	-	-	NC
87	P123	NC	I	-	Pd	-	-	-	NC
88	P122/(RXD6)	EEPROM SCL	I/O	C	M3VPu	-	I	I	Terminal for EEPROM control
89	P121/(CLK6)	EEPROM SDA	I/O	C	M3VPu	-	I	I	Terminal for EEPROM control
90	P120/(TXD6)	NC	I	-	Pd	-	-	-	NC
91	VCC	VCC	-	-	-	-	-	-	+3V
92	P30/(A8)	MIC DET	I	-	SW3VPu	-	O/L	O/L	Terminal for MIC detection
93	VSS	VSS	-	-	-	-	-	-	GND
94	P27/(A7)	DIRECT LED	O	C	-	-	O/L	O/L	SOURCE DIRECT LED(NR1601) /PURE DIRECT LED(SR5005)Control terminal(ON="H")
95	P26/(A6)	NC	O	C	-	-	O/L	O/L	NC
96	P25/(A5)	NC	O	C	-	-	O/L	O/L	NC
97	P24/(A4)	STANDBY(CEC) LED	O	C	-	-	O/L	O/L	POWER LED control terminal(ON="H")/STANDBY(CEC) LED)
98	P23/(A3)	M-DAX LED	O	C	-	-	O/L	O/L	M-DAX LED control terminal(ON="H")
99	P22/(A2)	TRIGGER 2	O	C	-	-	O/L	O/L	TRIGGER OUT control terminal
100	P21/(A1)	NC	I	-	Pd	-	-	-	NC
101	P20/(A0)	NC	I	-	Pd	-	-	-	NC
102	P17/(D15)/INT5	TRIGGER 1	O	C	-	-	O/L	O/L	TRIGGER OUT control terminal
103	P16/(D14)/INT4	TU GPO2_INT/TUNED	I	-	-	-	O/L	O/L	TUNER KST-MW/KST-MT control
104	P15/(D13)/INT3	RDS CLK(E2)	I	-	-	3/5	-	-	RDS control (N) (interrupt detection)
105	P14/(D12)	LIMIT DET	I	-	SW3VPu	-	I	I	LIMIT judgment signal detection input
106	P13/(D11)	A+B LIMIT	O	C	-	-	O/L	O/L	A+B LIMIT control SURROUND SPEAKER A+B="H"
107	P12/(D10)	LIMIT	O	C	-	-	O/L	O/L	LIMIT control Mch ST and EXT.IN="H" or (LIMIT DET=45sec"L"="H")
108	P11/(D9)	SB RL	O	C	-	-	O/L	O/L	RELAY control
109	P10/(D8)	H/P RL	O	C	-	-	O/L	O/L	HEADPHONE RLY control
110	P07/(D7)	FH RL	O	C	-	-	O/L	O/L	RELAY control
111	P06/(D6)	PRE Z2 MUTE	O	C	Pd	-	O/L	O/L	PRE OUT MUTE control
112	P05/(D5)	PRE SB MUTE	O	C	Pd	-	O/L	O/L	PRE OUT MUTE control
113	P04/(D4)	PRE SW MUTE	O	C	Pd	-	O/L	O/L	PRE OUT MUTE control
114	P114	ISEL A	I	-	SW3VPu	-	I	I	Input Selector rotation detect input (Rotary encoder)
115	P113	ISEL B	I	-	SW3VPu	-	I	I	Input Selector rotation detect input (Rotary encoder)
116	P112/(RXD8)	ZVOL CLK	O	C	-	-	O/L	O/L	ZONE VOL(NJW1194) control
117	P111/	VOL CLK	O	C	-	-	O/L	O/L	FUNCTION/VOLUME control (R2A15220)
118	P110/(TXD8)	VOL DATA	O	C	-	-	O/L	O/L	FUNCTION/VOLUME control (R2A15220)
119	P03/(D3)	S RL	O	C	-	-	O/L	O/L	RELAY control
120	P02/(D2)	C RL	O	C	-	-	O/L	O/L	RELAY control
121	P01/(D1)	F RL	O	C	-	-	O/L	O/L	RELAY control
122	P00/(D0)	F-B RL	O	C	-	-	O/L	O/L	RELAY control
123	P157	ZVOL DATA	O	C	-	-	O/L	O/L	ZONE VOL(NJW1194) control
124	P156	USB RDY	I	-	NET3VPu	-	O/L	O/L	USB(TELECHIPS) control terminal
125	P155/(RXD6)	SUB UPDATE	O	C	-	-	O/L	O/L	SUB UPDATE mode control (DFW). Normal="L : SUB rewriting mode shift="H"(SUB reset)

Pin	Pin Name	Synbol	I/O	Type	Pullup	Lv Cnv	STBY	stop	Function
126	P154/(TXD6)	BT LINK	I	-	SW3VPu	-	O/L	O/L	Bluetooth detection terminal
127	P153	USB PDN	O	C	NET3VPu	-	O/L	O/L	USB(TELECHIPS) control terminal
128	P152/RXD7	NC	I	-	Pd	-	-	-	NC
129	P151/CLK7	NC	I	-	Pd	-	-	-	NC
130	VSS	VSS	-	-	-	-	-	-	GND
131	P150/TXD7	NC	I	-	Pd	-	-	-	NC
132	VCC	VCC	-	-	-	-	-	-	+3V
133	P107/(AN7)/($\overline{KI3}$)	ZVOL STB	O	C	-	-	O/L	O/L	ZONE VOL(NJW1194) control
134	P106/AN6/$\overline{KI2}$	KEY3	I	-	M3VPu	-	I	I	Button input 3
135	P105/AN5/$\overline{KI1}$	KEY2	I	-	M3VPu	-	I	I	Button input 2
136	P104/AN4/$\overline{KI0}$	KEY1	I	-	M3VPu	-	I	I	Button input 1
137	P103/(AN3)	NC	I	-	Pd	-	-	-	NC
138	P102/(AN2)	NC	I	-	Pd	-	-	-	NC
139	P101/AN1	MODEL	I	-	M3VPu/Pd	-	I	I	MODEL switch input
140	AVSS	AVSS	-	-	-	-	-	-	Analog GND
141	P100/AN0	MODE	I	-	M3VPu/Pd	-	I	I	Destination switch input
142	VREF	VREF	-	-	-	-	-	-	Standard power supply input +3V
143	AVCC	AVCC	-	-	-	-	-	-	Analog power supply +3V
144	P97/($\overline{RXD4}$)	STANDBY(Normal/232C) LED	O	C	-	-	O/H	O/L	STANDBY(Normal/232C) LED

R5F3650KNFB (HDMI : U3301)

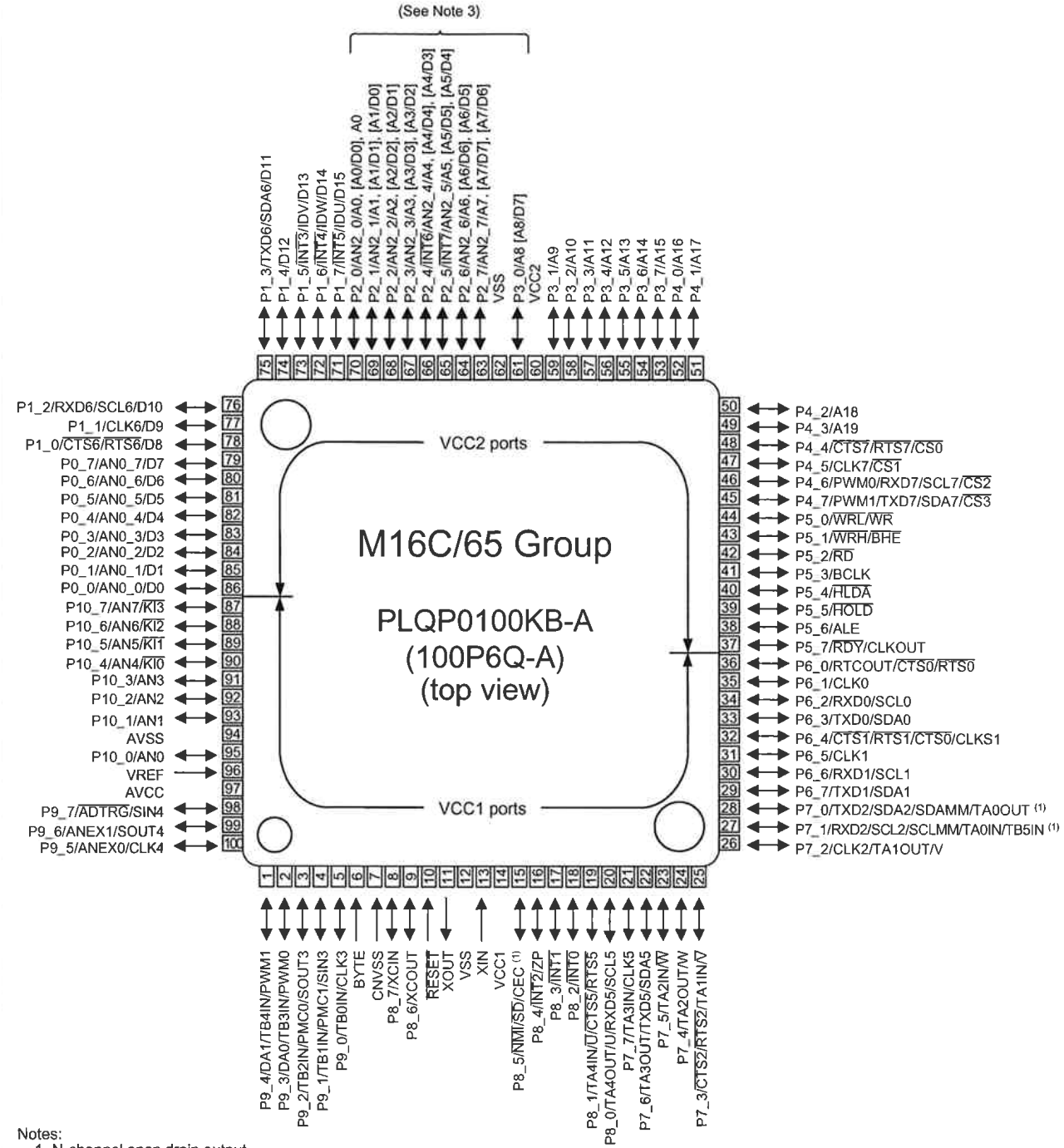

Notes:
1. N-channel open drain output.
2. Check the position of Pin 1 by referring to appendix 1, Package Dimensions.
3. Pin names in brackets [ ] represent a single functional signal. They should not be considered as two separate functional signals.

R5F3650KNFB Terminal Functions

Pin	Pin Name	Synbol	I/O	Type	Det	Op (Int.)	Pu/Pd (Ext.)	Res	PURE D	CEC STBY	P.OFF	Function
1	P94	NC	I	-	-	-	Pd	Z	-	-	Z	NC
2	P93	DIR CE	O	C	-	-	-	Z	O/L	O/L	Z	DIR control pin (LC89058W-VF4A)
3	P92/SOUT3	DIR DIN	O	C	-	-	-	Z	O/L	O/L	Z	DIR control pin (LC89058W-VF4A)
4	P91/SIN3	DIR DOUT	I	-	Lv	-	DA3.3Pu	Z	-	-	Z	DIR control pin (LC89058W-VF4A)
5	P90/CLK3	DIR CLK	O	C	-	-	-	Z	O/L	O/L	Z	DIR control pin (LC89058W-VF4A)
6	BYTE	BYTE	-	-	-	-	-	-	-	-	-	GND(Ext. data bus bit width switching, 16bit : L)
7	CNVCS	CNVSS	-	-	-	-	Pd	-	-	-	-	Single-chip/Micro-processor mode switching (Normal single-chip : L, Rewrite boot program start : H input set)
8	P87	ADC RST	O	C	-	-	-	Z	O/L	O/L	Z	AD(******) control pin
9	P86	NC	O	C	-	-	-	Z	O/L	O/L	Z	DIR control pin (LC89058W-VF4A)
10	RESET	$\overline{\text{SUBRESET}}$	I	-	Lv	-	SCPU3VPu	L	-	-	Z	Reset input
11	XOUT	X1	O	-	-	-	-	-	-	-	-	Oscillator connection
12	VSS	VSS	-	-	-	-	-	-	-	-	-	GND
13	XIN	X2	I	-	-	-	-	-	-	-	-	Oscillator connection
14	VCC	VCC	-	-	-		-	-	-	-	-	+3.3V
15	P85(N)/(NMI)/ (CEC)	(CEC_IN)	I	-	-	-	Pd	-	-	-	-	NC ("H" fixed/Reserve (16pin CEC-D signal input for TEST))
16	P84/INT2	CEC_IN	I	-	E↓&L	-	SCPU3VPu	Z	-	-	Z	CEC-D signal input pin
17	P83/INT1	ACK SIMO	I	-	E↓&L	-	-	Z	-	-	Z	MAIN-SUB ucom communication control input pin (MAIN ucom Hack:L Return)
18	P82/INT0	$\overline{\text{SUB BDOWN}}$	I	-	E↓&L		-	Z	-	-	Z	Power failure detect(Power failure:L)
19	P81	ABT RST	O	C	-	-	-	Z	O/H	O/H	Z	IP CONV(ABT2015) Reset
20	P80/(RXD5)	NC	I	-	-	-	Pd	Z	-	-	Z	NC
21	P77/(CLK5)	SUB TDO	I	-	-	-	-	Z	O/L	O/L	Z	PLD rewriting control (JTAG)
22	P76/(TXD5)	A PLD CS /"D/M"	O	C	-	-	-	Z	O/L	-	O/L	A PLD control pin/ DFW /MITSUBISHI rewritten for determining (DW :L)
23	P75	A PLD DATA	O	C	-	-	-	Z	O/L	O/L	Z	A PLD control pin
24	P74	A PLD CLK	O	C	-	-	-	Z	O/L	O/L	Z	A PLD cotrol pin
25	P73/CTS2	NC	I	-	-	-	Pd	Z	-	-	Z	NC
26	P72/CLK2	DA POWER	O	C	-	-	-	Z	Z	-	Z	DIGITAL power (DA3.3V,DA1.2V) ON/OFF control (H: ON)
27	P71(N)/RXD2/ SCLMM	HSCL(400k)	I/O	N	-	-	CEC3VPu	Z	O/L	O/L	O/L	VIDEO I2C- IP CONV(ABT1030)/HDMI_R(ADV7840) /HDMI T(ADV7511)
28	P70(N)/TXD2/ SDAMM	HSDA(400k)	I/O	N	-	-	CEC3VPu	Z	O/L	O/L	O/L	VIDEO I2C- IP CONV(ABT1030)/HDMI_R(ADV7840) /HDMI T(ADV7511)
29	P67/TXD1	TXD	O	C	-	-	SCPU3VPu	Z	-	-	Z	Data transmission output to external
30	P66/RXD1	RXD	I	-	Lv	-	SCPU3VPu	Z	-	-	Z	Data reception input from the external
31	P65/CLK1/SCLK	SCLK	I	-	-	-	Pd	Z	-	-	Z	Emulator communication pin
32	P64/CTS1	NC	I	-	-	-	Pd	Z	-	-	Z	NC
33	P63/TXD0	SOMI	O	C	-	-	-	Z	-	-	Z	MAIN-SUB ucom communication control pin
34	P62/RXD0	SIMO	I	-	-	-	-	Z	-	-	Z	MAIN-SUB ucom communication control pin
35	P61/CLK0	CLK SIMO	I	-	-	-	-	Z	-	-	Z	MAIN-SUB ucom communication control pin
36	P60/CTS0	REQ SOMI	O	C	-	-	-	Z	-	-	Z	MAIN-SUB ucom communication control pin
37	P57	NC	O	C	-	-	-	Z	-	O/L	O/L	NC
38	P56	DV POWER2	O	C	-	-	-	Z	O/L	-	Z	DIGITAL.VIDEO power control pin (DV1.8V)
39	P55/EPM	EPM	I	-	-	-	Pd	Z	-	-	Z	Rewrite boot program start : L input set
40	P54	CEC_OUT	O	C	-	-	-	Z	O/L	-	Z	CEC-D signal input pin
41	P53	NC	I	-	-	-	Pd	Z	-	-	Z	NC
42	P52	NC	I	-	-	-	Pd	Z	-	-	Z	NC
43	P51	NC	I	-	-	-	Pd	Z	-	-	Z	NC
44	P50/CE	CE/DSP BOOT	O/I	C	-	-	SCPU3VPu	Z	O/L	-	Z	MONI SEL(for Dual Moni)(MAX4886) /Rewrite boot program start : H input set
45	P47/(TXD7)/(SDA7)	COMP SW2	O	C	-	-	-	Z	O/L	O/L	O/L	VIDEO SELECT IC(NJW2586)
46	P46/(RXD7)/(SCL7)	COMP SW1	O	C	-	-	-	Z	O/L	O/L	O/L	VIDEO SELECT IC(NJW2586)
47	P45/(CLK7)	NC	I	-	-	-	Pd	Z	-	-	Z	NC
48	P44	HPD1	O	C	-	-	-	Z	O/L	O/L	Z	HP DET control pin
49	P43	NC	I	-	-	-	Pd	Z	-	-	Z	NC
50	P42	NC	I	-	-	-	Pd	Z	-	-	Z	NC
51	P41	CEC POWER	O	C	-	-	-	Z	O/L	O/H	Z	Power ON (CEC5V,CEC3.3V,CEC1.8V) for CEC STANDBY
52	P40	HPD2	O	C	-	-	-	Z	O/L	O/L	Z	HP DET control pin
53	P37	HDMIR_RST	O	C	-	-	SCPU3VPu	Z	O/H	-	Z	Reset for HDMI RECEIVER(ADV7840)
54	P36	1TX RST	O	C	-	-	SCPU3VPu	Z	O/H	-	Z	Reset for HDMI TRANSMITTER (ADV7511)
55	P35	NC	I	-	-	-	Pd	Z	-	-	Z	NC
56	P34	Z1 SSIGDET	I	-	Lv	-	SCPU3VPu	Z	-	-	Z	S signal presence detection input (Connected: H)
57	P33	HPD3	O	C	-	-	-	Z	O/L	O/L	Z	HP DET control pin

Pin	Pin Name	Synbol	I/O	Type	Det	Op (Int.)	Pu/Pd (Ext.)	Res	PURE D	CEC STBY	P.OFF	Function
58	P32	DAC MDI	O	C	-	-	-	Z	O/L	O/L	Z	DAC control pin (ASK4358)
59	P31	DAC MC	O	C	-	-	-	Z	O/L	O/L	Z	DAC control pin (ASK4358)
60	VCC	VCC	-	-	-	-	-	-	-	-	-	+3.3V
61	P30	DAC MS	O	C	-	-	-	Z	O/L	O/L	Z	DAC control pin (ASK4358)
62	VSS	VSS	-	-	-	-	-	-	-	-	-	GND
63	P27	DAC RST	O	C	-	-	-	Z	O/H	O/L	Z	DAC control pin (ASK4358)
64	P26	DV POWER	O	C	-	-	-	Z	O/L	MODE1=O/H MODE2=O/L	Z	"DIGITAL VIDEO power control pin (DV5V,DV3.3V)
65	P25/INT7	NC	I	-	Lv	-	Pd	Z	-	-	Z	NC
66	P24/INT6	1TX INT	I	-	Lv	-	DV3Pu	Z	-	-	Z	HDMI OUT1 signal presence detection input (HDMI TRANS1 ADV7511)
67	P23	SUB TMS	O	C	-	-	DA3.3Pu	Z	O/L	-	Z	PLD rewriting control (JTAG)
68	P22	VEXP STB	O	C	-	-	-	Z	O/L	O/L	Z	NC
69	P21	VEXP OE	O	C	-	-	-	Z	O/L	O/L	Z	NC
70	P20	VEXP CLK	O	C	-	-	-	Z	O/L	O/L	Z	NC
71	P17/INT5	ADVINT1	I	-	E↓&L	-	-	Z	-	-	Z	HDMI RECEIVER(ADV7840) INT1 output
72	P16/INT4	ADVINT2	I	-	E↓&L	-	-	Z	-	-	Z	HDMI RECEIVER(ADV7840) INT2 output
73	P15/INT3	ADVINT3	I	-	E↓&L	-	-	Z	-	-	Z	HDMI RECEIVER(ADV7840) INT3 output
74	P14	HPD4	O	C	-	-	-	Z	O/L	O/L	Z	HP DET control pin
75	P13/TXD6	DSP MOSI	O	C	-	-	DA3VPu	Z	O/L	O/L	Z	DSP control pin (ADSP-21367-333)
76	P12/RXD6	DSP MISO	I	-	Lv	-	DA3VPu	Z	-	-	Z	DSP control pin (ADSP-21367-333)
77	P11/CLK6	DSPICLK	O	C	-	-	DA3VPu	Z	O/L	O/L	Z	DSP control pin (ADSP-21367-333)
78	P10	Z1VSIG.DET	I	-	Lv	-	SCPU3VPu	Z	-	-	Z	VIDEO IN signal presence detection input signal (input:H)
79	P07	SUB TDI	O	C	-	-	DA3.3Pu	Z	O/L	O/L	Z	PLD rewriting control (JTAG)
80	P06	NC	I	-	-	-	Pd	Z	-	-	Z	NC
81	P05	NC	I	-	-	-	Pd	Z	-	-	Z	NC
82	P04	NC	I	-	-	-	Pd	Z	-	-	Z	NC
83	P03	SUB TCK	O	C	-	-	Pd	Z	O/L	-	Z	PLD rewriting control (JTAG)
84	P02	NC	I	-	-	-	Pd	Z	-	-	Z	NC
85	P01	NC	I	-	-	-	Pd	Z	-	-	Z	NC
86	P00	DIR RST1	O	C	-	-	-	Z	O/L	O/L	O/L	DIR control pin (LC89058W-VF4A)
87	P107/(AN7)	DSP RST	O	C	-	-	-	Z	O/L	O/L	Z	DSP(ADSP-21367-333) reset output pin (Reset : L)
88	P106/(AN6)	NC	I	-	-	-	Pd	Z	-	-	Z	NC
89	P105/(AN5)	DSP ROMRST	O	C	-	-	-	Z	O/L	O/L	Z	Memory reset for DSP (Reset : L)
90	P104/(AN4)	COMPS DET	I	-	Lv	-	SCPU3VPu	Z	-	-	Z	COMPONENT IN signal presence detection input
91	P103/(AN3)	DSP FLAG0	I	-	Lv	-	Pd	Z	-	-	Z	DSP control pin ADSP-21367-333
92	P102/(AN2)	DSP ICS	O	C	-	-	DA3VPu	Z	O/L	O/L	Z	DSP control pin ADSP-21367-333
93	P101/(AN1)	NC	I	-	-	-	Pd	Z	-	-	Z	NC
94	AVSS	AVSS	-	-	-	-	-	-	-	-	-	AD GND
95	P100/(AN0)	NC	I	-	-	-	Pd	Z	-	-	Z	NC
96	VREF	VREF	-	-	-	-	-	-	-	-	-	AD standard +3.3V
97	AVCC	AVCC	-	-	-	-	-	-	-	-	-	AD +3.3V
98	P97/(SIN4)	NC	I	-	-	-	Pd	Z	-	-	Z	NC
99	P96/(SOUT4)	NC	I	-	-	-	Pd	Z	-	-	Z	NC
100	P95/(CLK4)	VEXP DIN	O	C	-	-	-	Z	O/L	O/L	Z	NC

ADV7511BSTZ (HDMI : U1501)

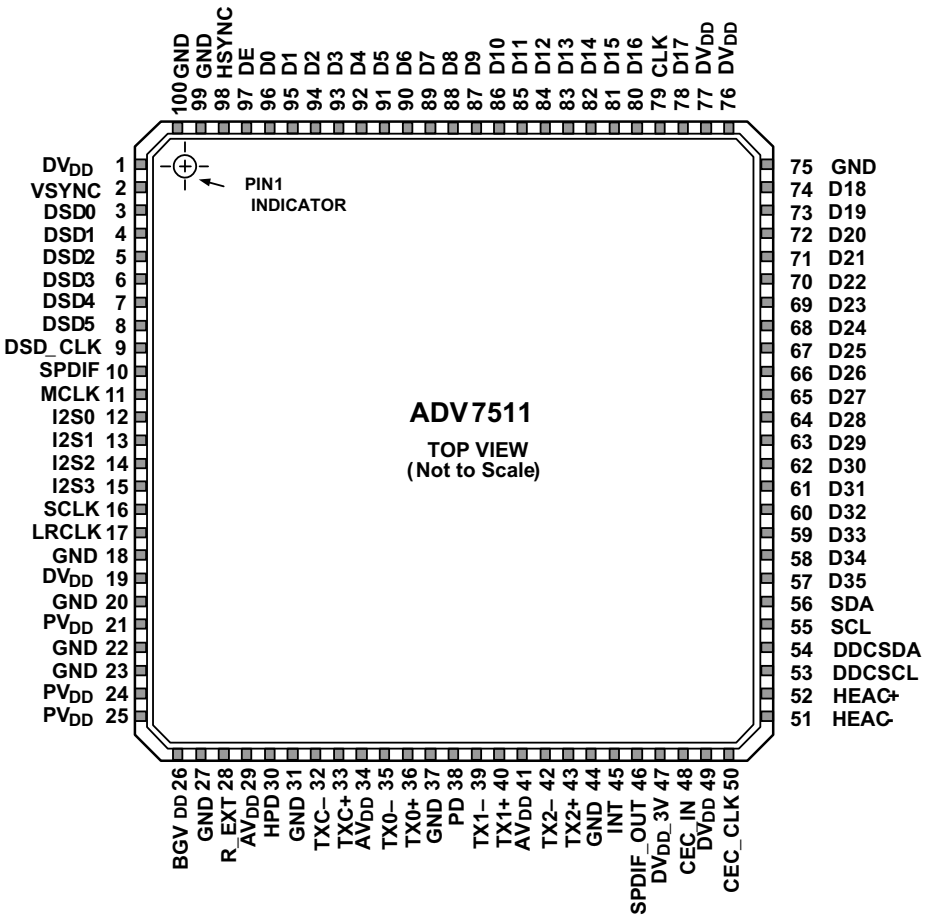

ADV7511BSTZ Block diagram

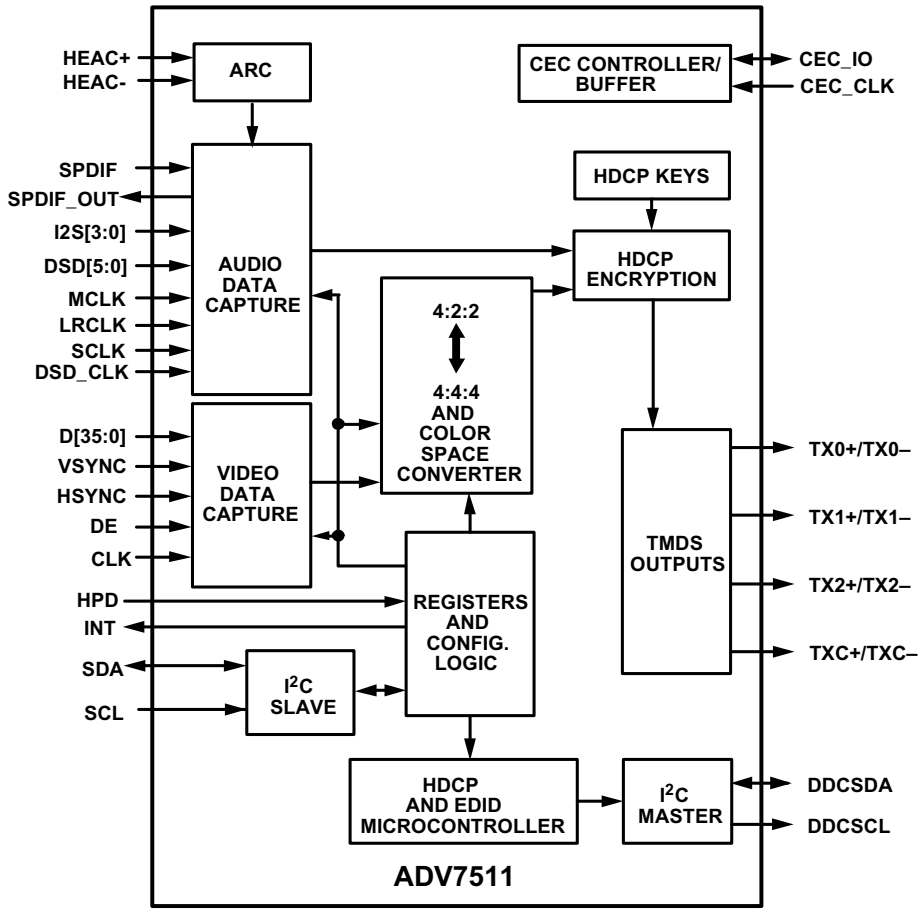

LC89058W-E (HDMI : U1706)

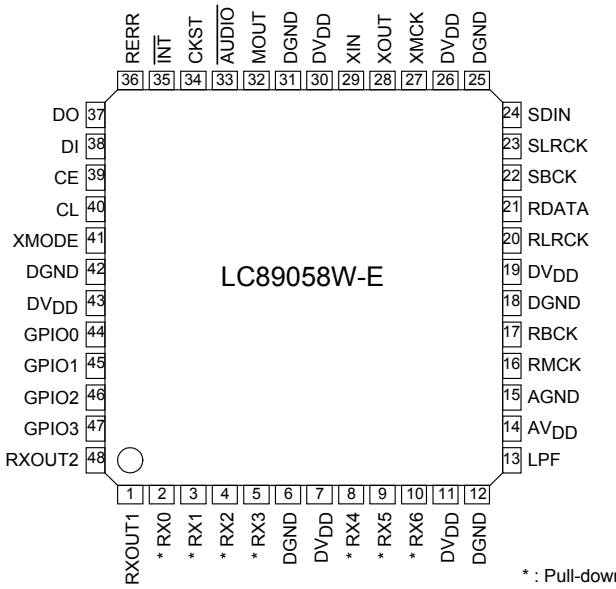

* : Pull-down resistor internal at no selection

Pin Functions

Pin No.	Name	I/O	Function
1	RXOUT1	O	RX0-6 input S/PDIF through output pin 1
2	RX0	I_5(pd)	5V withstand voltage TTL input level compatible S/PDIF input pin (connected to GND when RX1 is set)
3	RX1	I(pd)	Co-axial compatible S/PDIF input pin (supported demodulation sampling frequency of up to 96kHz)
4	RX2	I_5(pd)	5V withstand voltage TTL input level compatible S/PDIF input pin (connected to GND when RX1 is set)
5	RX3	I_5(pd)	5V withstand voltage TTL input level compatible S/PDIF input pin
6	DGND		Digital GND
7	DV_{DD}		Digital power supply (3.3V)
8	RX4	I_5(pd)	5V tolerable TTL input level compatible S/PDIF input pin
9	RX5	I_5(pd)	5V tolerable TTL input level compatible S/PDIF input pin
10	RX6	I_5(pd)	5V tolerable TTL input level compatible S/PDIF input pin
11	DV_{DD}		Digital power supply (3.3V)
12	DGND		Digital GND
13	LPF	O	PLL loop filter connection pin
14	AV_{DD}		Analog power supply (3.3V)
15	AGND		Analog GND
16	RMCK	O	R system clock output pin (VCO, 512fs, XIN)
17	RBCK	O/I	R system bit clock I/O pin (64fs)
18	DGND		Digital GND
19	DV_{DD}		Digital power supply (3.3V)
20	RLRCK	O/I	R system LR clock I/O pin (fs)
21	RDATA	O	Serial audio data output pin
22	SBCK	O	S system bit clock output pin (16fs, 32fs, 64fs, 128fs)
23	SLRCK	O	S system LR clock output pin (fs/4, fs/2, fs, 2fs)
24	SDIN	I_5	External serial audio data input pin

Pin No.	Name	I/O	Function
25	DGND		Digital GND
26	DV_{DD}		Digital power supply (3.3V)
27	XMCK	O	Oscillation amplifier clock output pin
28	XOUT	O	Output pin connected to the resonator
29	XIN	I	External clock input pin, connected to the resonator (12.288MHz/24.576MHz)
30	DV_{DD}		Digital power supply
31	DGND		Digital GND
32	MOUT	I/O	Emphasis information || Input fs monitor output || Chip address setting input pin
33	$\overline{AUDIO}$	I/O	Channel status bit 1 output || Chip address setting input pin
34	CKST	I/O	Clock switching transition period signal output || Master/slave setting input pin
35	$\overline{INT}$	I/O	Microcontroller interrupt signal output || Pins44-48 I/O setting input pin
36	RERR	O	PLL lock error, data error flag output pin
37	DO	O	CCB microcontroller I/F, read data output pin (3-state)
38	DI	I_5	CCB microcontroller I/F, write data input pin
39	CE	I_5	CCB microcontroller I/F, chip enable input pin
40	CL	I_5	CCB microcontroller I/F, clock input pin
41	XMODE	I_5	System reset input pin
42	DGND		Digital GND
43	DV_{DD}		Digital power supply (3.3V)
44	GPIO0	O/I	General-purpose I/O pin || Selector input pin (output referred to RDATA pin)
45	GPIO1	O/I	General-purpose I/O pin || Selector input pin (output referred to RLRCK pin)
46	GPIO2	O/I	General-purpose I/O pin || Selector input pin (output referred to RBCK pin)
47	GPIO3	O/I	General-purpose I/O pin || Selector input pin (output referred to RMCK pin)
48	RXOUT2	O	RX0-6 input S/PDIF through output pin 2

* Input voltage: I= -0.3 to 3.6V, I_5 = -0.3 to 5.5V
* Output voltage: O= -0.3 to 3.6V
* Pins 2, 4, 5, 8, 9, 10, 24, 38, 39, 40, and 41 have an internal pull-down resistor (pd).
  Their level is fixed when they are unselected.
* Pins 32 and 33 are input pins for chip address setting when pin 41 is held at the low level.
* Pin 34 serves as the input pin for designating as the master or slave when pin 41 is held at the low level.
* Pin 35 serves as the input pin for configuring the I/O of pins 44 to 47 when pin 41 is held at the low level.
* The DV_{DD} and AV_{DD} pins must be held at the same level and turned on and off at the same timing to preclude Latch-up conditions.

LC89058W-E Block diagram

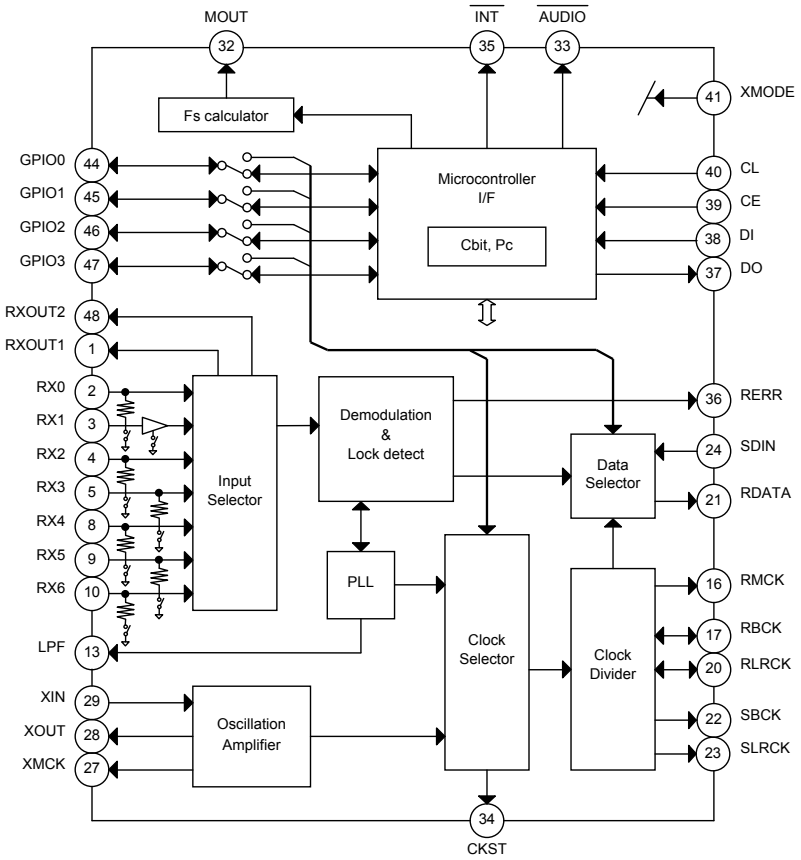

ADSP21367KSWZ2A (HDMI : U1901)

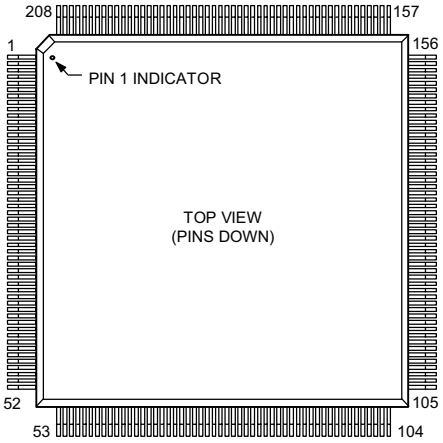

ADSP21367KSWZ2A Terminal Function

Pin No.	Signal	Pin No.	Signal	Pin No.	Signal	Pin No.	Signal
1	VDD	53	VDD	105	VDD	157	VDD
2	DATA28	54	GND	106	GND	158	VDD
3	DATA27	55	IOVDD	107	IOVDD	159	GND
4	GND	56	ADDR0	108	$\overline{\text{SDCAS}}$	160	VDD
5	IOVDD	57	ADDR2	109	$\overline{\text{SDRAS}}$	161	VDD
6	DATA26	58	ADDR1	110	SDCKE	162	VDD
7	DATA25	59	ADDR4	111	$\overline{\text{SDWE}}$	163	TDI
8	DATA24	60	ADDR3	112	$\overline{\text{WR}}$	164	$\overline{\text{TRST}}$
9	DATA23	61	ADDR5	113	SDA10	165	TCK
10	GND	62	GND	114	GND	166	GND
11	VDD	63	VDD	115	IOVDD	167	VDD
12	DATA22	64	GND	116	SDCLK0	168	TMS
13	DATA21	65	IOVDD	117	GND	169	CLK_CFG0
14	DATA20	66	ADDR6	118	VDD	170	BOOTCFG0
15	IOVDD	67	ADDR7	119	$\overline{\text{RD}}$	171	CLK_CFG1
16	GND	68	ADDR8	120	ACK	172	$\overline{\text{EMU}}$
17	DATA19	69	ADDR9	121	FLAG3	173	BOOTCFG1
18	DATA18	70	ADDR10	122	FLAG2	174	TDO
19	VDD	71	GND	123	FLAG1	175	DAI4
20	GND	72	VDD	124	FLAG0	176	DAI2
21	DATA17	73	GND	125	DAI20	177	DAI3
22	VDD	74	IOVDD	126	GND	178	DAI1
23	GND	75	ADDR11	127	VDD	179	IOVDD
24	VDD	76	ADDR12	128	GND	180	GND
25	GND	77	ADDR13	129	IOVDD	181	VDD
26	DATA16	78	GND	130	DAI19	182	GND
27	DATA15	79	VDD	131	DAI18	183	DPI14
28	DATA14	80	AVSS	132	DAI17	184	DPI13
29	DATA13	81	AVDD	133	DAI16	185	DPI12
30	DATA12	82	GND	134	DAI15	186	DPI11
31	IOVDD	83	CLKIN	135	DAI14	187	DPI10
32	GND	84	XTAL2	136	DAI13	188	DPI9
33	VDD	85	IOVDD	137	DAI12	189	DPI8
34	GND	86	GND	138	VDD	190	DPI7
35	DATA11	87	VDD	139	IOVDD	191	IOVDD
36	DATA10	88	ADDR14	140	GND	192	GND
37	DATA9	89	GND	141	VDD	193	VDD
38	DATA8	90	IOVDD	142	GND	194	GND
39	DATA7	91	ADDR15	143	DAI11	195	DPI6
40	DATA6	92	ADDR16	144	DAI10	196	DPI5
41	IOVDD	93	ADDR17	145	DAI8	197	DPI4
42	GND	94	ADDR18	146	DAI9	198	DPI3
43	VDD	95	GND	147	DAI6	199	DPI1
44	DATA4	96	IOVDD	148	DAI7	200	DPI2
45	DATA5	97	ADDR19	149	DAI5	201	CLKOUT
46	DATA2	98	ADDR20	150	IOVDD	202	$\overline{\text{RESET}}$
47	DATA3	99	ADDR21	151	GND	203	IOVDD
48	DATA0	100	ADDR23	152	VDD	204	GND
49	DATA1	101	ADDR22	153	GND	205	DATA30
50	IOVDD	102	$\overline{\text{MS1}}$	154	VDD	206	DATA31
51	GND	103	$\overline{\text{MS0}}$	155	GND	207	DATA29
52	VDD	104	VDD	156	VDD	208	VDD

W9864G2IH-6 (HDMI : U1902)

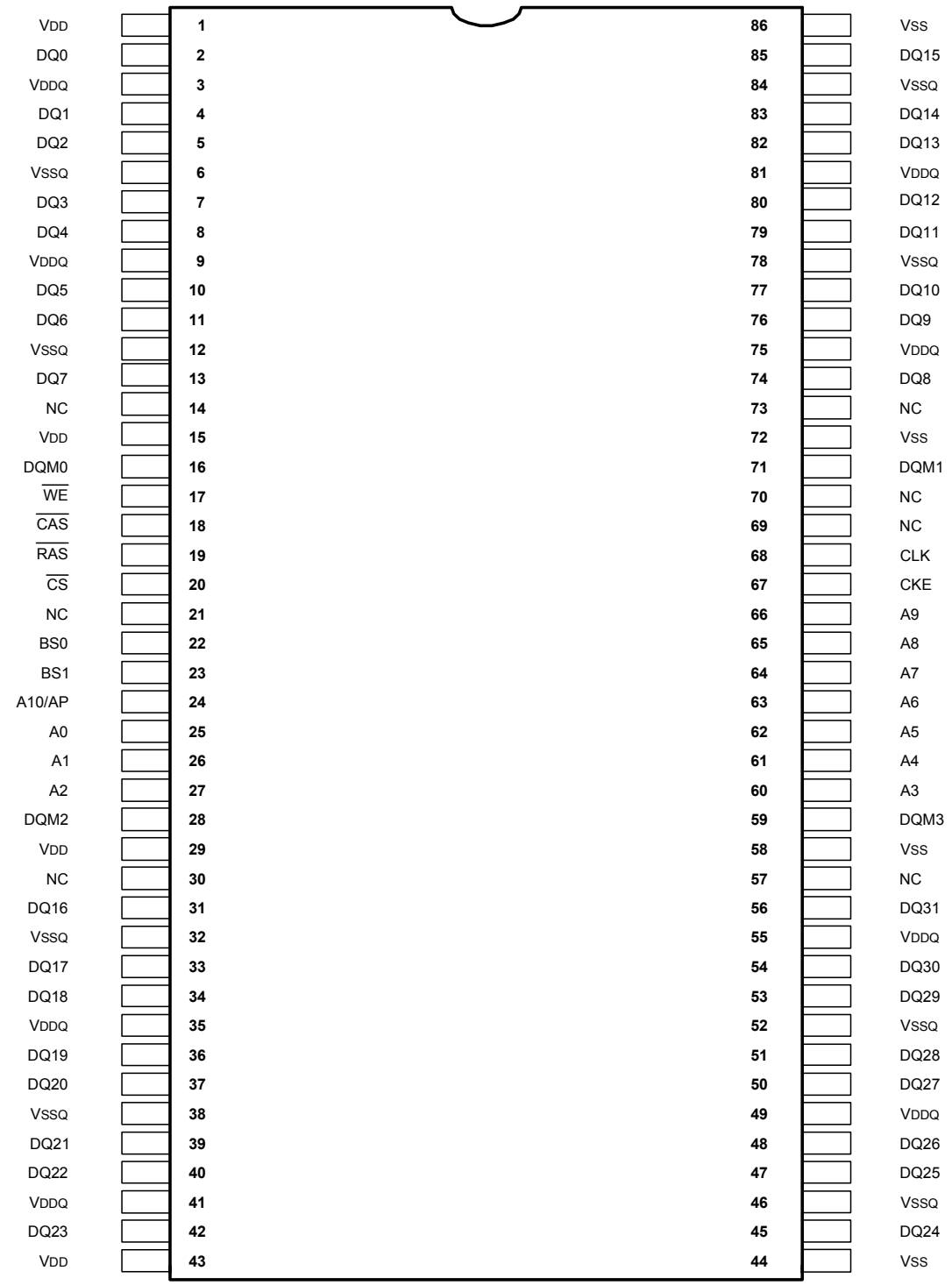

W9864G2IH-6 Block diagram

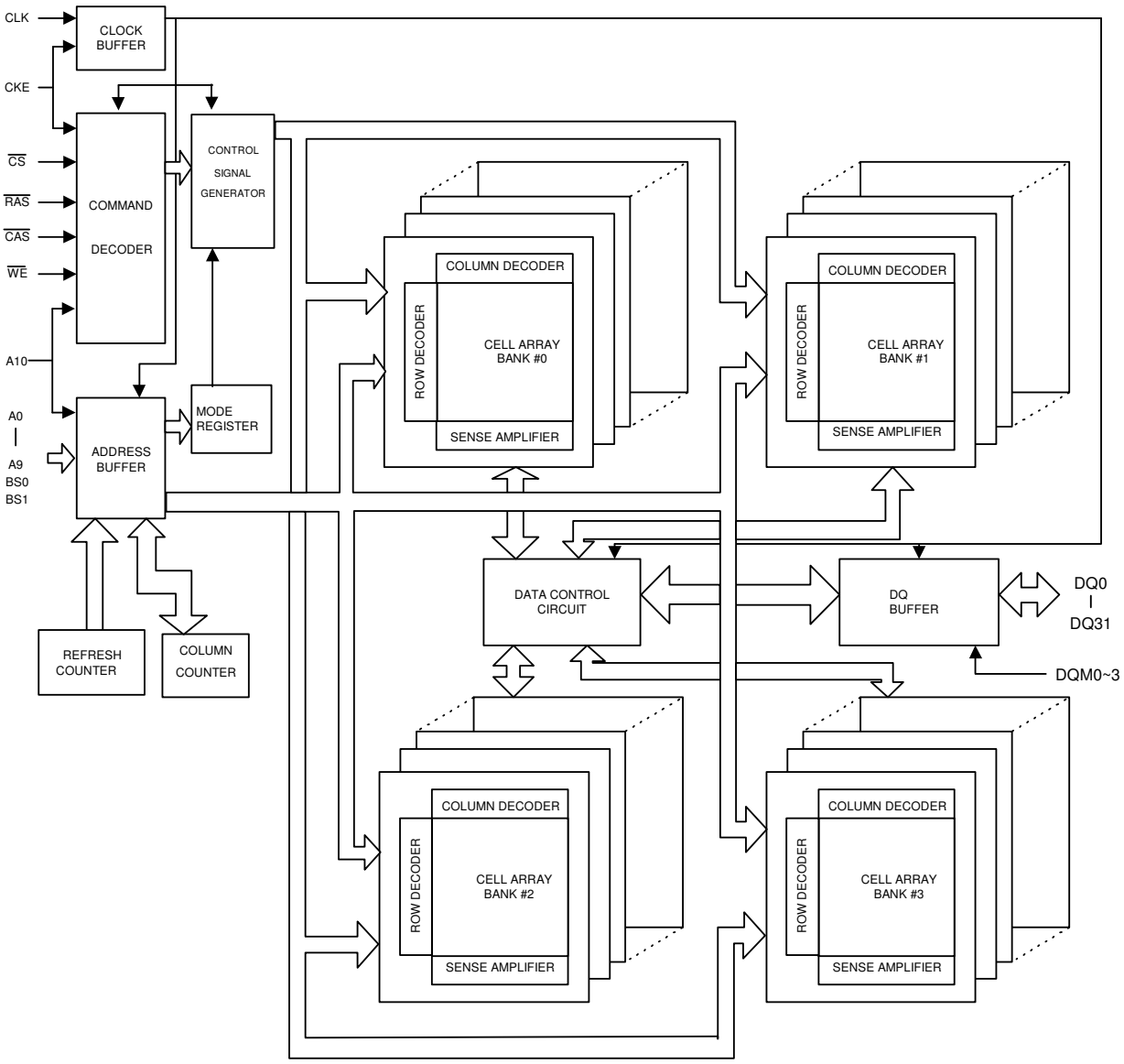

W9864G2IH-6 Pin description

PIN NUMBER	PIN NAME	FUNCTION	DESCRIPTION
24, 25, 26, 27, 60, 61, 62, 63, 64, 65, 66	A0−A10	Address	Multiplexed pins for row and column address. Row address: A0−A10. Column address: A0−A7. A10 is sampled during a precharge command to determine if all banks are to be precharged or bank selected by BS0, BS1.
22, 23	BS0, BS1	Bank Select	Select bank to activate during row address latch time, or bank to read/write during address latch time.
2, 4, 5, 7, 8, 10, 11, 13, 31, 33, 34, 36, 37, 39, 40, 42, 45, 47, 48, 50, 51, 53, 54, 56, 74, 76, 77, 79, 80, 82, 83, 85	DQ0−DQ31	Data Input/ Output	Multiplexed pins for data output and input.
20	$\overline{CS}$	Chip Select	Disable or enable the command decoder. When command decoder is disabled, new command is ignored and previous operation continues.
19	$\overline{RAS}$	Row Address Strobe	Command input. When sampled at the rising edge of the clock $\overline{RAS}$, $\overline{CAS}$ and $\overline{WE}$ define the operation to be executed.
18	$\overline{CAS}$	Column Address Strobe	Referred to $\overline{RAS}$
17	$\overline{WE}$	Write Enable	Referred to $\overline{RAS}$
16, 28, 59, 71	DQM0−DQM3	Input/Output Mask	The output buffer is placed at Hi-Z (with latency of 2) when DQM is sampled high in read cycle. In write cycle, sampling DQM high will block the write operation with zero latency.
68	CLK	Clock Inputs	System clock used to sample inputs on the rising edge of clock.
67	CKE	Clock Enable	CKE controls the clock activation and deactivation. When CKE is low, Power Down mode, Suspend mode, or Self Refresh mode is entered.
1, 15, 29, 43	V_{DD}	Power	Power for input buffers and logic circuit inside DRAM.
44, 58, 72, 86	V_{SS}	Ground	Ground for input buffers and logic circuit inside DRAM.
3, 9, 35, 41, 49, 55, 75, 81	V_{DDQ}	Power for I/O Buffer	Separated power from VDD, to improve DQ noise immunity.
6, 12, 32, 38, 46, 52, 78, 84	V_{SSQ}	Ground for I/O Buffer	Separated ground from VSS, to improve DQ noise immunity.
14, 21, 30, 57, 69, 70, 73	NC	No Connection	No connection.

EN29LV160BB (HDMI : U1903) : Bottom boot Sector
EN29LV160BT (HDMI : U2301) : Top boot Sector

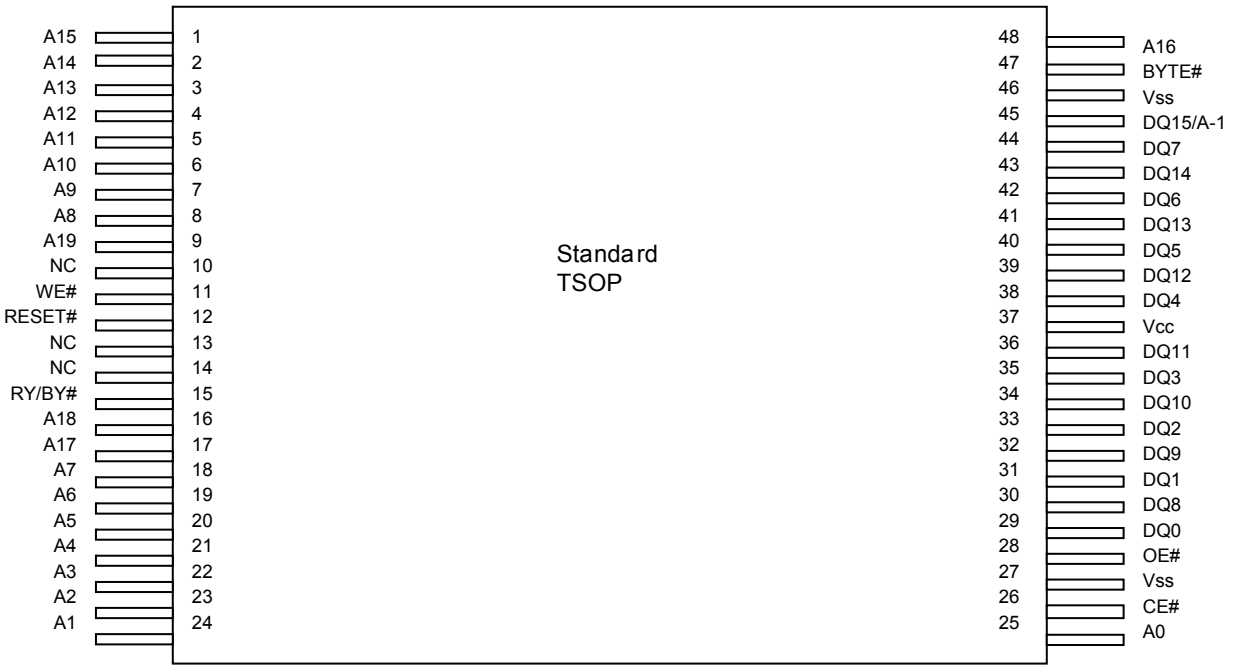

EN29LV160BB/EN29LV160BT Block Diagram

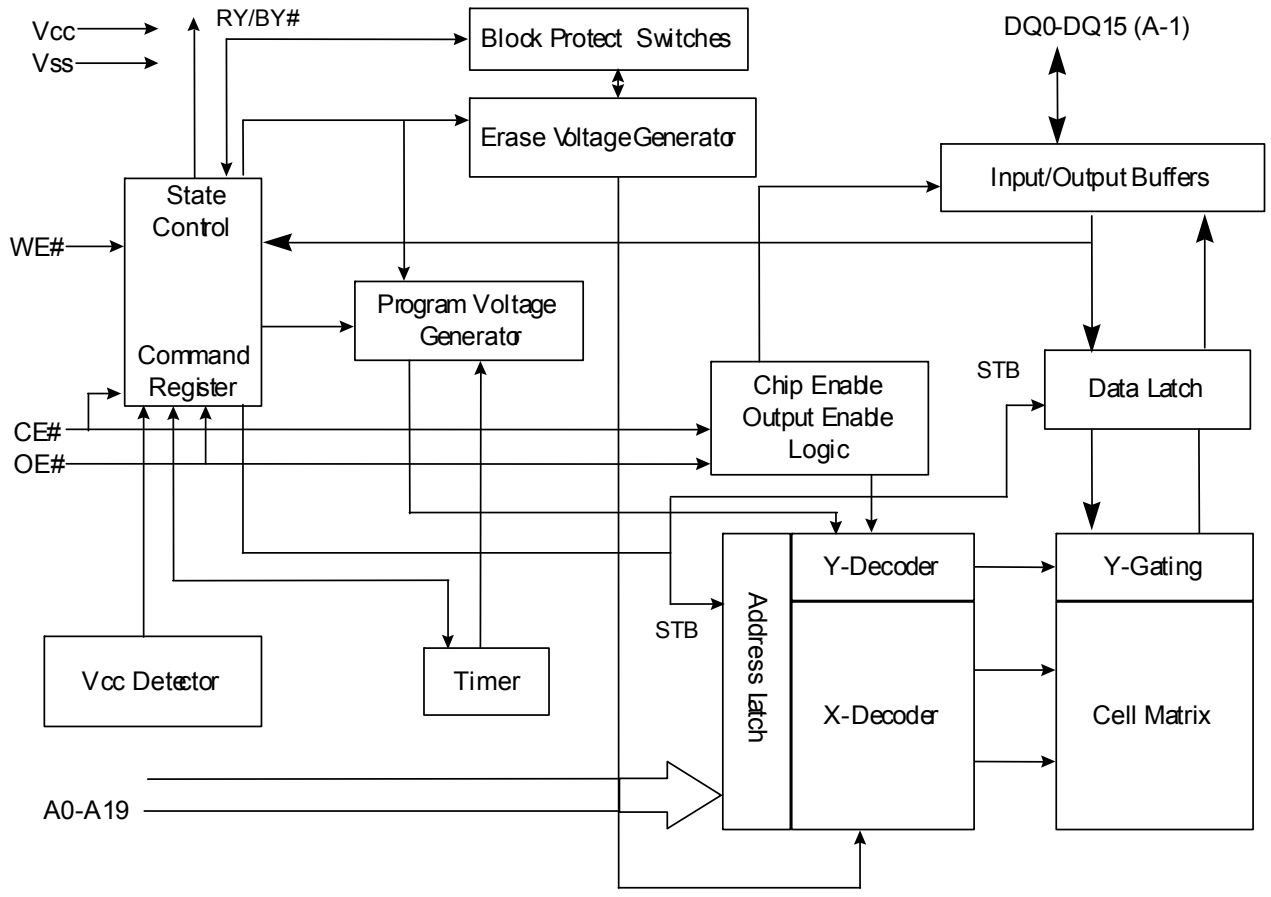

TCC8600 (HDMI : U2304)

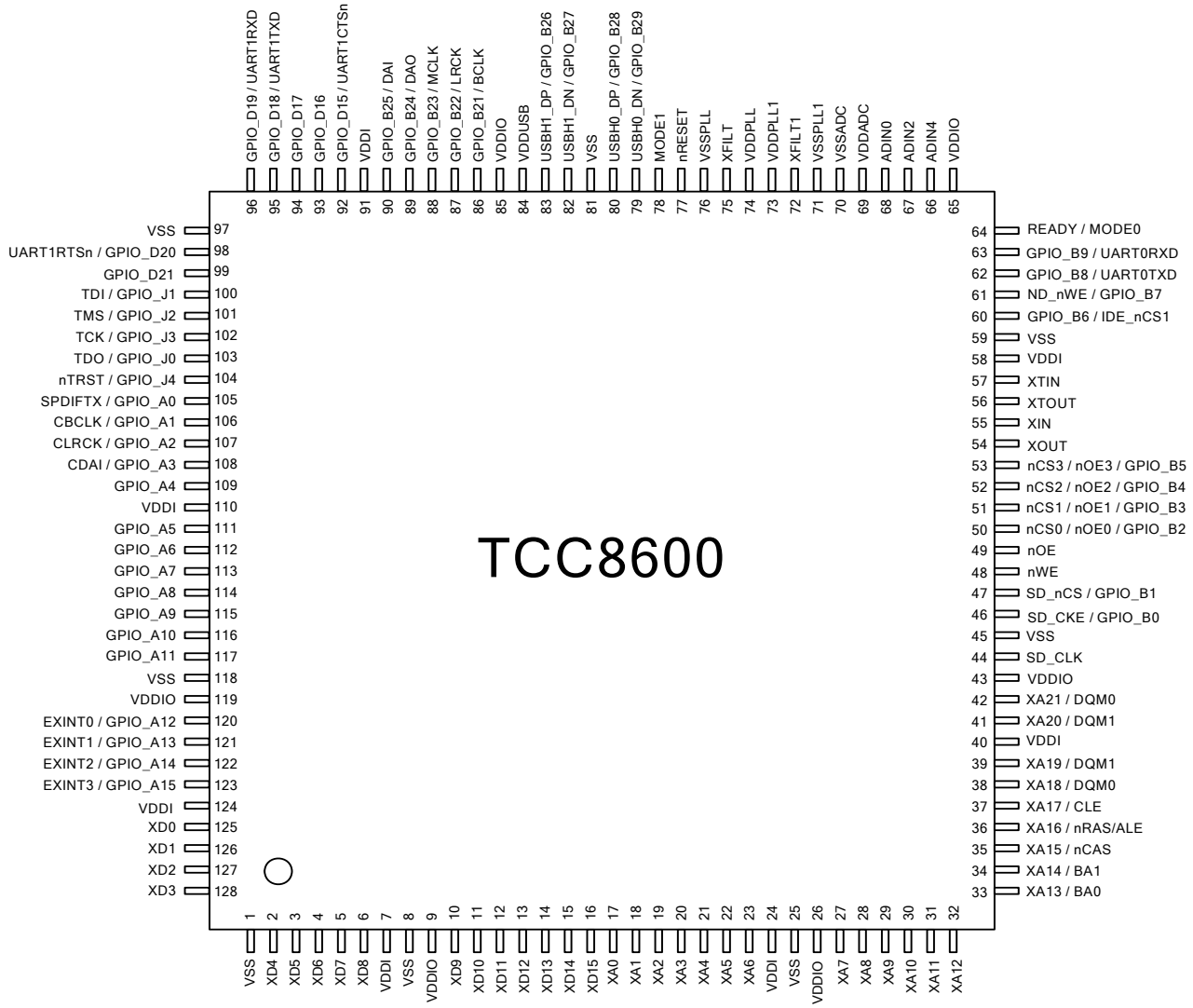

TCC8600 Block Diagram

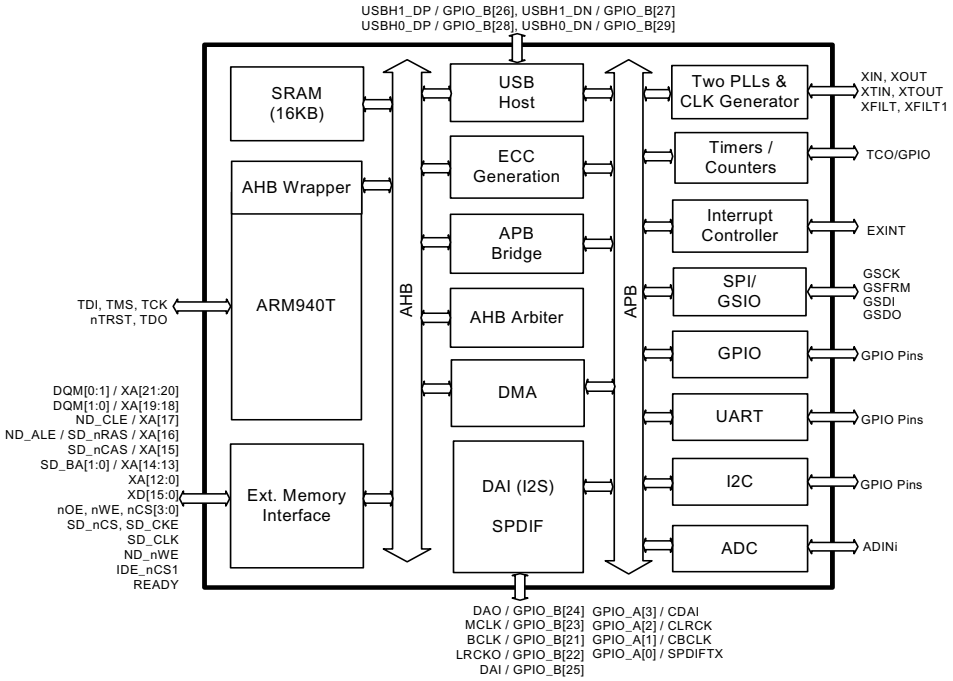

TCC8600 Pin Description

Signal Name	Pin#	Type	Description – TCC8600
SD_CLK	44	I/O	SDRAM Clock
SD_CKE / GPIO_B[0]	46	I/O	SDRAM Clock Enable signal. Active high. / GPIO_B[0]
SD_nCS / GPIO_B[1]	47	I/O	Chip select signal for SDRAM, Active low / GPIO_B[1]
XA[21] / DQM[0]	42	I/O	External Bus Address Bit [21] / Data I/O Mask 0
XA[20] / DQM[1]	41	I/O	External Bus Address Bit [20] / Data I/O Mask 1
XA[19] / DQM[1]	39	I/O	External Bus Address Bit [19] / Data I/O Mask 1
XA[18] / DQM[0]	38	I/O	External Bus Address Bit [18] / Data I/O Mask 0
XA[17] / ND_CLE	37	I/O	External Bus Address Bit [17] / CLE for NAND Flash
XA[16] / SD_nRAS / ND_ALE	36	I/O	External Bus Address Bit [16] / SDRAM RAS signal / ALE for NAND Flash
XA[15] / SD_nCAS	35	I/O	External Bus Address Bit [15] / SDRAM CAS signal
XA[14] / SD_BA[1]	34	I/O	External Bus Address Bit [14] / SDRAM Bank Address 1
XA[13] / SD_BA[0]	33	I/O	External Bus Address Bit [13] / SDRAM Bank Address 0.
XA[12]	32	I/O	External Bus Address Bit [12]
XA[11]	31	I/O	External Bus Address Bit [11]
XA[10]	30	I/O	External Bus Address Bit [10]
XA[9]	29	I/O	External Bus Address Bit [9]
XA[8]	28	I/O	External Bus Address Bit [8]
XA[7]	27	I/O	External Bus Address Bit [7]
XA[6]	23	I/O	External Bus Address Bit [6]
XA[5]	22	I/O	External Bus Address Bit [5]
XA[4]	21	I/O	External Bus Address Bit [4]
XA[3]	20	I/O	External Bus Address Bit [3]
XA[2]	19	I/O	External Bus Address Bit [2]
XA[1]	18	I/O	External Bus Address Bit [1]
XA[0]	17	I/O	External Bus Address Bit [0]
XD[15]	16	I/O	External Bus Data Bit [15]. Internal pull-up resistor enabled at reset.
XD[14]	15	I/O	External Bus Data Bit [14]. Internal pull-up resistor enabled at reset.
XD[13]	14	I/O	External Bus Data Bit [13]. Internal pull-up resistor enabled at reset.
XD[12]	13	I/O	External Bus Data Bit [12]. Internal pull-up resistor enabled at reset.
XD[11]	12	I/O	External Bus Data Bit [11]. Internal pull-up resistor enabled at reset.
XD[10]	11	I/O	External Bus Data Bit [10]. Internal pull-up resistor enabled at reset.
XD[9]	10	I/O	External Bus Data Bit [9]. Internal pull-up resistor enabled at reset.
XD[8]	6	I/O	External Bus Data Bit [8]. Internal pull-up resistor enabled at reset.
XD[7]	5	I/O	External Bus Data Bit [7]. Internal pull-up resistor enabled at reset.
XD[6]	4	I/O	External Bus Data Bit [6]. Internal pull-up resistor enabled at reset.
XD[5]	3	I/O	External Bus Data Bit [5]. Internal pull-up resistor enabled at reset.
XD[4]	2	I/O	External Bus Data Bit [4]. Internal pull-up resistor enabled at reset.
XD[3]	128	I/O	External Bus Data Bit [3]. Internal pull-up resistor enabled at reset.
XD[2]	127	I/O	External Bus Data Bit [2]. Internal pull-up resistor enabled at reset.
XD[1]	126	I/O	External Bus Data Bit [1]. Internal pull-up resistor enabled at reset.
XD[0]	125	I/O	External Bus Data Bit [0]. Internal pull-up resistor enabled at reset.
nWE	48	I/O	Static Memory Write Enable signal. Active low.
nOE	49	I/O	Static Memory Output Enable signal. Active low.
ND_nWE / GPIO_B[7]	61	I/O	NAND flash WE. Active low. / GPIO_B[7]
nCS[3] / ND_nOE[3] / GPIO_B[5]	53	I/O	External Bus Chip Select [3] / NAND Flash Output Enable [3] / GPIO_B[5]
nCS[2] / ND_nOE[2] / GPIO_B[4]	52	I/O	External Bus Chip Select [2] / NAND Flash Output Enable [2] / GPIO_B[4]
nCS[1] / ND_nOE[1] / GPIO_B[3]	51	I/O	External Bus Chip Select [1] / NAND Flash Output Enable [1] / GPIO_B[3]
nCS[0] / ND_nOE[0] / GPIO_B[2]	50	I/O	External Bus Chip Select [0] / NAND Flash Output Enable [0] / GPIO_B[2]
READY / MODE0	64	I	Ready information from external device.
USBH1_DP / GPIO_B[26]	83	I/O	USB Host Port 1 D+ signal / GPIO_B[26]
USBH1_DN / GPIO_B[27]	82	I/O	USB Host Port 1 D- signal / GPIO_B[27]
USBH0_DP / GPIO_B[28]	80	I/O	USB Host Port 0 D+ signal / GPIO_B[28]
USBH0_DN / GPIO_B[29]	79	I/O	USB Host Port 0 D- signal / GPIO_B[29]

Signal Name	Pin#	Type	Description – TCC8600
GPIO_A[15] / EXINT[3]	123	I/O	GPIO_A[15] / External Interrupt Request [3]
GPIO_A[14] / EXINT[2]	122	I/O	GPIO_A[14] / External Interrupt Request [2]
GPIO_A[13] / EXINT[1]	121	I/O	GPIO_A[13] / External Interrupt Request [1]
GPIO_A[12] / EXINT[0]	120	I/O	GPIO_A[12] / External Interrupt Request [0]
GPIO_A[11]	117	I/O	GPIO_A[11] / I2C Clock / GPSB/GSIO3 Data In
GPIO_A[10]	116	I/O	GPIO_A[10] / I2C Data Line / GPSB/GSIO3 FRM
GPIO_A[9]	115	I/O	GPIO_A[9] / I2C Clock./ Bus Width (BW) / GPSB/GSIO3 Clock
GPIO_A[8]	114	I/O	GPIO_A[8] / I2C Data Line / GPSB/GSIO3 Data Output
GPIO_A[7]	113	I/O	GPIO_A[7] / GPSB/GSIO1 Data In
GPIO_A[6]	112	I/O	GPIO_A[6] / GPSB/GSIO1 FRM
GPIO_A[5]	111	I/O	GPIO_A[5] / GPSB/GSIO1 Clock
GPIO_A[4]	109	I/O	GPIO_A[4] / GPSB/GSIO1 Data Output
GPIO_A[3] / CDAI	108	I/O	CD Data Input / GPIO_A[3] / GPSB/GSIO1 Data In
GPIO_A[2] / CLRCK	107	I/O	CD Data Word Clock Input / GPIO_A[2] / GPSB/GSIO1 FRM
GPIO_A[1] / CBCLK	106	I/O	CD Data Bit Clock Input / GPIO_A[1] / GPSB/GSIO1 Clock
GPIO_A[0] / SPDIFTX	105	I/O	GPIO_A[0] / SPDIF TX Output / GPSB/GSIO1 Data Output
GPIO_B[25] / DAI	90	I/O	I2S Digital Audio data Input / GPIO_B[25]
GPIO_B[24] / DAO	89	I/O	I2S Digital Audio data Output / GPIO_B[24] / Boot Mode Bit 2 (BM[2])
GPIO_B[23] / MCLK	88	I/O	I2S System Clock / GPIO_B[23]
GPIO_B[22] / LRCK	87	I/O	I2S Word Clock / GPIO_B[22] / Boot Mode Bit 1 (BM[1])
GPIO_B[21] / BCLK	86	I/O	I2S Bit Clock / GPIO_B[21] / Boot Mode Bit 0 (BM[0])
GPIO_B[9] / UART0RXD	63	I/O	GPIO_B[9] / UART0 RX Data
GPIO_B[8] / UART0TXD	62	I/O	GPIO_B[8] / UART0 TX Data
GPIO_B[6] / IDE_nCS1	60	I/O	GPIO_B[6] / Chip select 1 for IDE Interface. Internal pull-up resistor enabled at reset.
GPIO_D[21]	99	I/O	GPIO_D[21]. Internal pull-up resistor enabled at reset.
GPIO_D[20] / UART1RTSn	98	I/O	GPIO_D[20] / UART1 RTS Output (active low). Internal pull-up resistor enabled at reset.
GPIO_D[19] / UART1RXD	96	I/O	GPIO_D[19] / UART1 RX Data. Internal pull-up resistor enabled at reset.
GPIO_D[18] / UART1TXD	95	I/O	GPIO_D[18] / UART1 TX Data. Internal pull-up resistor enabled at reset.
GPIO_D[17]	94	I/O	GPIO_D[17] / I2C SCL
GPIO_D[16]	93	I/O	GPIO_D[16] / I2C SDA
GPIO_D[15] / UART1CTSn	92	I/O	GPIO_D[15] / UART1 CTS Input (active low)
ADIN0	68	AI	General purpose multi-channel ADC input 0
ADIN2	67	AI	General purpose multi-channel ADC input 2
ADIN4	66	AI	General purpose multi-channel ADC input 4
XIN	55	I	12MHz Crystal Oscillator Input. Voltage must not exceed VDDI (1.95V).
XOUT	54	O	12MHz Crystal Oscillator Output
XTIN	57	I	32.768kHz Crystal Oscillator Input.Voltage must not exceed VDDI (1.95V).
XTOUT	56	O	32.768kHz Crystal Oscillator Output
XFILT	75	AO	PLL0 filter output. 350pF capacitor is required.
XFILT1	72	AO	PLL1 filter output. 1200pF capacitor is required.
TDI / GPIO_J[1]	100	I/O	JTAG serial data input. Internal pull-up resistor is enabled at reset
TMS / GPIO_J[2]	101	I/O	JTAG test mode select. Internal pull-up resistor is enabled at reset
TCK / GPIO_J[3]	102	I/O	JTAG test clock. Internal pull-up resistor is enabled at reset
TDO / GPIO_J[0]	103	I/O	JTAG serial data output. Internal pull-up resistor is enabled at reset
nTRST / GPIO_J[4]	104	I/O	JTAG reset signal. Active low.. Internal pull-up resistor is enabled at reset
MODE1	78	I	Mode Setting Input 1. Pull-down for normal operation.
nRESET	77	I	System Reset. Active low.
VDDIO	9	PWR	Digital Power for I/O (3.3V)
VDDIO	26	PWR	Digital Power for I/O (3.3V)
VDDIO	43	PWR	Digital Power for I/O (3.3V)
VDDIO	65	PWR	Digital Power for I/O (3.3V)
VDDIO	85	PWR	Digital Power for I/O (3.3V)
VDDIO	119	PWR	Digital Power for I/O (3.3V)
VDDUSB	84	PWR	Power for USB I/O (3.3V)
VDDI	7	PWR	Digital Power for Internal Core (1.8V)
VDDI	24	PWR	Digital Power for Internal Core (1.8V)
VDDI	40	PWR	Digital Power for Internal Core (1.8V)

Signal Name	Pin#	Type	Description – TCC8600
VDDI	58	PWR	Digital Power for Internal Core (1.8V)
VDDI	91	PWR	Digital Power for Internal Core (1.8V)
VDDI	110	PWR	Digital Power for Internal Core (1.8V)
VDDI	124	PWR	Digital Power for Internal Core (1.8V)
VDDADC	69	PWR	Analog Power for ADC (3.3V)
VDDPLL	74	PWR	Analog & Digital Power for PLL (1.8V)
VDDPLL1	73	PWR	Analog & Digital Power for PLL1 (1.8V)
VSS	1	GND	Digital Ground
VSS	8	GND	Digital Ground
VSS	25	GND	Digital Ground
VSS	45	GND	Digital Ground
VSS	59	GND	Digital Ground
VSS	81	GND	Digital Ground
VSS	97	GND	Digital Ground
VSS	118	GND	Digital Ground
VSSADC	70	GND	Analog Ground for ADC
VSSPLL	76	GND	Analog Ground for PLL
VSSPLL1	71	GND	Analog Ground for PLL

TCC8600 Pin Description in Pin Number Order

Pin#	Signal Name	Type	Description – TCC8600
1	**VSS**	GND	Digital Ground
2	**XD[4]**	I/O	External Bus Data Bit [4]. Internal pull-up resistor enabled at reset.
3	**XD[5]**	I/O	External Bus Data Bit [5]. Internal pull-up resistor enabled at reset.
4	**XD[6]**	I/O	External Bus Data Bit [6]. Internal pull-up resistor enabled at reset.
5	**XD[7]**	I/O	External Bus Data Bit [7]. Internal pull-up resistor enabled at reset.
6	**XD[8]**	I/O	External Bus Data Bit [8]. Internal pull-up resistor enabled at reset.
7	**VDDI**	PWR	Digital Power for Internal Core (1.8V)
8	**VSS**	GND	Digital Ground
9	**VDDIO**	PWR	Digital Power for I/O (3.3V)
10	**XD[9]**	I/O	External Bus Data Bit [9]. Internal pull-up resistor enabled at reset.
11	**XD[10]**	I/O	External Bus Data Bit [10]. Internal pull-up resistor enabled at reset.
12	**XD[11]**	I/O	External Bus Data Bit [11]. Internal pull-up resistor enabled at reset.
13	**XD[12]**	I/O	External Bus Data Bit [12]. Internal pull-up resistor enabled at reset.
14	**XD[13]**	I/O	External Bus Data Bit [13]. Internal pull-up resistor enabled at reset.
15	**XD[14]**	I/O	External Bus Data Bit [14]. Internal pull-up resistor enabled at reset.
16	**XD[15]**	I/O	External Bus Data Bit [15]. Internal pull-up resistor enabled at reset.
17	**XA[0]**	I/O	External Bus Address Bit [0]
18	**XA[1]**	I/O	External Bus Address Bit [1]
19	**XA[2]**	I/O	External Bus Address Bit [2]
20	**XA[3]**	I/O	External Bus Address Bit [3]
21	**XA[4]**	I/O	External Bus Address Bit [4]
22	**XA[5]**	I/O	External Bus Address Bit [5]
23	**XA[6]**	I/O	External Bus Address Bit [6]
24	**VDDI**	PWR	Digital Power for Internal Core (1.8V)
25	**VSS**	GND	Digital Ground
26	**VDDIO**	PWR	Digital Power for I/O (3.3V)
27	**XA[7]**	I/O	External Bus Address Bit [7]
28	**XA[8]**	I/O	External Bus Address Bit [8]
29	**XA[9]**	I/O	External Bus Address Bit [9]
30	**XA[10]**	I/O	External Bus Address Bit [10]
31	**XA[11]**	I/O	External Bus Address Bit [11]
32	**XA[12]**	I/O	External Bus Address Bit [12]
33	**XA[13] / SD_BA[0]**	I/O	External Bus Address Bit [13] / SDRAM Bank Address 0.
34	**XA[14] / SD_BA[1]**	I/O	External Bus Address Bit [14] / SDRAM Bank Address 1
35	**XA[15] / SD_nCAS**	I/O	External Bus Address Bit [15] / SDRAM CAS signal

Pin#	Signal Name	Type	Description – TCC8600
36	**XA[16] / SD_nRAS / ND_ALE**	I/O	External Bus Address Bit [16] / SDRAM RAS signal / ALE for NAND Flash
37	**XA[17] / ND_CLE**	I/O	External Bus Address Bit [17] / CLE for NAND Flash
38	**XA[18] / DQM[0]**	I/O	External Bus Address Bit [18] / Data I/O Mask 0
39	**XA[19] / DQM[1]**	I/O	External Bus Address Bit [19] / Data I/O Mask 1
40	**VDDI**	PWR	Digital Power for Internal Core (1.8V)
41	**XA[20] / DQM[1]**	I/O	External Bus Address Bit [20] / Data I/O Mask 1
42	**XA[21] / DQM[0]**	I/O	External Bus Address Bit [21] / Data I/O Mask 0
43	**VDDIO**	PWR	Digital Power for I/O (3.3V)
44	**SD_CLK**	I/O	SDRAM Clock
45	**VSS**	GND	Digital Ground
46	**SD_CKE / GPIO_B[0]**	I/O	SDRAM Clock Enable signal. Active high. / GPIO_B[0]
47	**SD_nCS / GPIO_B[1]**	I/O	Chip select signal for SDRAM, Active low / GPIO_B[1]
48	**nWE**	I/O	Static Memory Write Enable signal. Active low.
49	**nOE**	I/O	Static Memory Output Enable signal. Active low.
50	**nCS[0] / ND_nOE[0] / GPIO_B[2]**	I/O	External Bus Chip Select [0] / NAND Flash Output Enable [0] / GPIO_B[2]
51	**nCS[1] / ND_nOE[1] / GPIO_B[3]**	I/O	External Bus Chip Select [1] / NAND Flash Output Enable [1] / GPIO_B[3]
52	**nCS[2] / ND_nOE[2] / GPIO_B[4]**	I/O	External Bus Chip Select [2] / NAND Flash Output Enable [2] / GPIO_B[4]
53	**nCS[3] / ND_nOE[3] / GPIO_B[5]**	I/O	External Bus Chip Select [3] / NAND Flash Output Enable [3] / GPIO_B[5]
54	**XOUT**	O	12MHz Crystal Oscillator Output
55	**XIN**	I	12MHz Crystal Oscillator Input. Voltage must not exceed VDDI (1.95V).
56	**XTOUT**	O	32.768kHz Crystal Oscillator Output
57	**XTIN**	I	32.768kHz Crystal Oscillator Input.Voltage must not exceed VDDI (1.95V).
58	**VDDI**	PWR	Digital Power for Internal Core (1.8V)
59	**VSS**	GND	Digital Ground
60	**GPIO_B[6] / IDE_nCS1**	I/O	GPIO_B[6] / Chip select 1 for IDE Interface. Internal pull-up resistor enabled at reset.
61	**ND_nWE / GPIO_B[7]**	I/O	NAND flash WE. Active low. / GPIO_B[7]
62	**GPIO_B[8] / UART0TXD**	I/O	GPIO_B[8] / UART0 TX Data
63	**GPIO_B[9] / UART0RXD**	I/O	GPIO_B[9] / UART0 RX Data
64	**READY / MODE0**	I	Ready information from external device.
65	**VDDIO**	PWR	Digital Power for I/O (3.3V)
66	**ADIN4**	AI	General purpose multi-channel ADC input 4
67	**ADIN2**	AI	General purpose multi-channel ADC input 2
68	**ADIN0**	AI	General purpose multi-channel ADC input 0
69	**VDDADC**	PWR	Analog Power for ADC (3.3V)
70	**VSSADC**	GND	Analog Ground for ADC
71	**VSSPLL1**	GND	Analog Ground for PLL
72	**XFILT1**	AO	PLL1 filter output. 1200pF capacitor is required.
73	**VDDPLL1**	PWR	Analog & Digital Power for PLL1 (1.8V)
74	**VDDPLL**	PWR	Analog & Digital Power for PLL (1.8V)
75	**XFILT**	AO	PLL0 filter output. 350pF capacitor is required.
76	**VSSPLL**	GND	Analog Ground for PLL
77	**nRESET**	I	System Reset. Active low.
78	**MODE1**	I	Mode Setting Input 1. Pull-down for normal operation.
79	**USBH0_DN / GPIO_B[29]**	I/O	USB Host Port 0 D- signal / GPIO_B[29]
80	**USBH0_DP / GPIO_B[28]**	I/O	USB Host Port 0 D+ signal / GPIO_B[28]
81	**VSS**	GND	Digital Ground
82	**USBH1_DN / GPIO_B[27]**	I/O	USB Host Port 1 D- signal / GPIO_B[27]
83	**USBH1_DP / GPIO_B[26]**	I/O	USB Host Port 1 D+ signal / GPIO_B[26]
84	**VDDUSB**	PWR	Power for USB I/O (3.3V)
85	**VDDIO**	PWR	Digital Power for I/O (3.3V)
86	**GPIO_B[21] / BCLK**	I/O	I2S Bit Clock / GPIO_B[21] / Boot Mode Bit 0 (BM[0])
87	**GPIO_B[22] / LRCK**	I/O	I2S Word Clock / GPIO_B[22] / Boot Mode Bit 1 (BM[1])
88	**GPIO_B[23] / MCLK**	I/O	I2S System Clock / GPIO_B[23]
89	**GPIO_B[24] / DAO**	I/O	I2S Digital Audio data Output / GPIO_B[24] / Boot Mode Bit 2 (BM[2])
90	**GPIO_B[25] / DAI**	I/O	I2S Digital Audio data Input / GPIO_B[25]
91	**VDDI**	PWR	Digital Power for Internal Core (1.8V)
92	**GPIO_D[15] / UART1CTSn**	I/O	GPIO_D[15] / UART1 CTS Input (active low)
93	**GPIO_D[16]**	I/O	GPIO_D[16] / I2C SDA

Pin#	Signal Name	Type	Description – TCC8600
94	**GPIO_D[17]**	I/O	GPIO_D[17] / I2C SCL
95	**GPIO_D[18] / UART1TXD**	I/O	GPIO_D[18] / UART1 TX Data. Internal pull-up resistor enabled at reset.
96	**GPIO_D[19] / UART1RXD**	I/O	GPIO_D[19] / UART1 RX Data. Internal pull-up resistor enabled at reset.
97	**VSS**	GND	Digital Ground
98	**GPIO_D[20] / UART1RTSn**	I/O	GPIO_D[20] / UART1 RTS Output (active low). Internal pull-up resistor enabled at reset.
99	**GPIO_D[21]**	I/O	GPIO_D[21]. Internal pull-up resistor enabled at reset.
100	**TDI / GPIO_J[1]**	I/O	JTAG serial data input. Internal pull-up resistor is enabled at reset
101	**TMS / GPIO_J[2]**	I/O	JTAG test mode select. Internal pull-up resistor is enabled at reset
102	**TCK / GPIO_J[3]**	I/O	JTAG test clock. Internal pull-up resistor is enabled at reset
103	**TDO / GPIO_J[0]**	I/O	JTAG serial data output. Internal pull-up resistor is enabled at reset
104	**nTRST / GPIO_J[4]**	I/O	JTAG reset signal. Active low.. Internal pull-up resistor is enabled at reset
105	**GPIO_A[0] / SPDIFTX**	I/O	GPIO_A[0] / SPDIF TX Output / GPSB/GSIO1 Data Output
106	**GPIO_A[1] / CBCLK**	I/O	CD Data Bit Clock Input / GPIO_A[1] / GPSB/GSIO1 Clock
107	**GPIO_A[2] / CLRCK**	I/O	CD Data Word Clock Input / GPIO_A[2] / GPSB/GSIO1 FRM
108	**GPIO_A[3] / CDAI**	I/O	CD Data Input / GPIO_A[3] / GPSB/GSIO1 Data In
109	**GPIO_A[4]**	I/O	GPIO_A[4] / GPSB/GSIO1 Data Output
110	**VDDI**	PWR	Digital Power for Internal Core (1.8V)
111	**GPIO_A[5]**	I/O	GPIO_A[5] / GPSB/GSIO1 Clock
112	**GPIO_A[6]**	I/O	GPIO_A[6] / GPSB/GSIO1 FRM
113	**GPIO_A[7]**	I/O	GPIO_A[7] / GPSB/GSIO1 Data In
114	**GPIO_A[8]**	I/O	GPIO_A[8] / I2C Data Line / GPSB/GSIO3 Data Output
115	**GPIO_A[9]**	I/O	GPIO_A[9] / I2C Clock./ Bus Width (BW) / GPSB/GSIO3 Clock
116	**GPIO_A[10]**	I/O	GPIO_A[10] / I2C Data Line / GPSB/GSIO3 FRM
117	**GPIO_A[11]**	I/O	GPIO_A[11] / I2C Clock / GPSB/GSIO3 Data In
118	**VSS**	GND	Digital Ground
119	**VDDIO**	PWR	Digital Power for I/O (3.3V)
120	**GPIO_A[12] / EXINT[0]**	I/O	GPIO_A[12] / External Interrupt Request [0]
121	**GPIO_A[13] / EXINT[1]**	I/O	GPIO_A[13] / External Interrupt Request [1]
122	**GPIO_A[14] / EXINT[2]**	I/O	GPIO_A[14] / External Interrupt Request [2]
123	**GPIO_A[15] / EXINT[3]**	I/O	GPIO_A[15] / External Interrupt Request [3]
124	**VDDI**	PWR	Digital Power for Internal Core (1.8V)
125	**XD[0]**	I/O	External Bus Data Bit [0]. Internal pull-up resistor enabled at reset.
126	**XD[1]**	I/O	External Bus Data Bit [1]. Internal pull-up resistor enabled at reset.
127	**XD[2]**	I/O	External Bus Data Bit [2]. Internal pull-up resistor enabled at reset.
128	**XD[3]**	I/O	External Bus Data Bit [3]. Internal pull-up resistor enabled at reset.

IS42S16400F-6TL (HDMI : U2302)

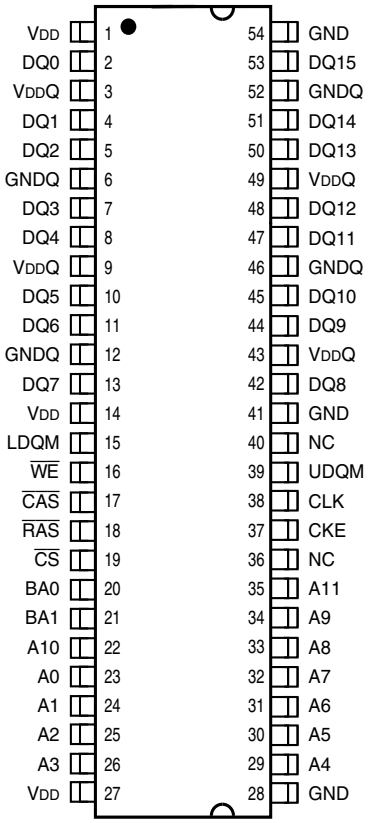

PIN DESCRIPTIONS

A0-A11	Row Address Input
A0-A7	Column Address Input
BA0, BA1	Bank Select Address
DQ0 to DQ15	Data I/O
CLK	System Clock Input
CKE	Clock Enable
$\overline{CS}$	Chip Select
$\overline{RAS}$	Row Address Strobe Command
$\overline{CAS}$	Column Address Strobe Command
$\overline{WE}$	Write Enable
LDQM	x16 Lower Byte, Input/Output Mask
UDQM	x16 Upper Byte, Input/Output Mask
VDD	Power
GND	Ground
VDDQ	Power Supply for I/O Pin
GNDQ	Ground for I/O Pin
NC	No Connection

IS42S16400F-6TL Block Diagram

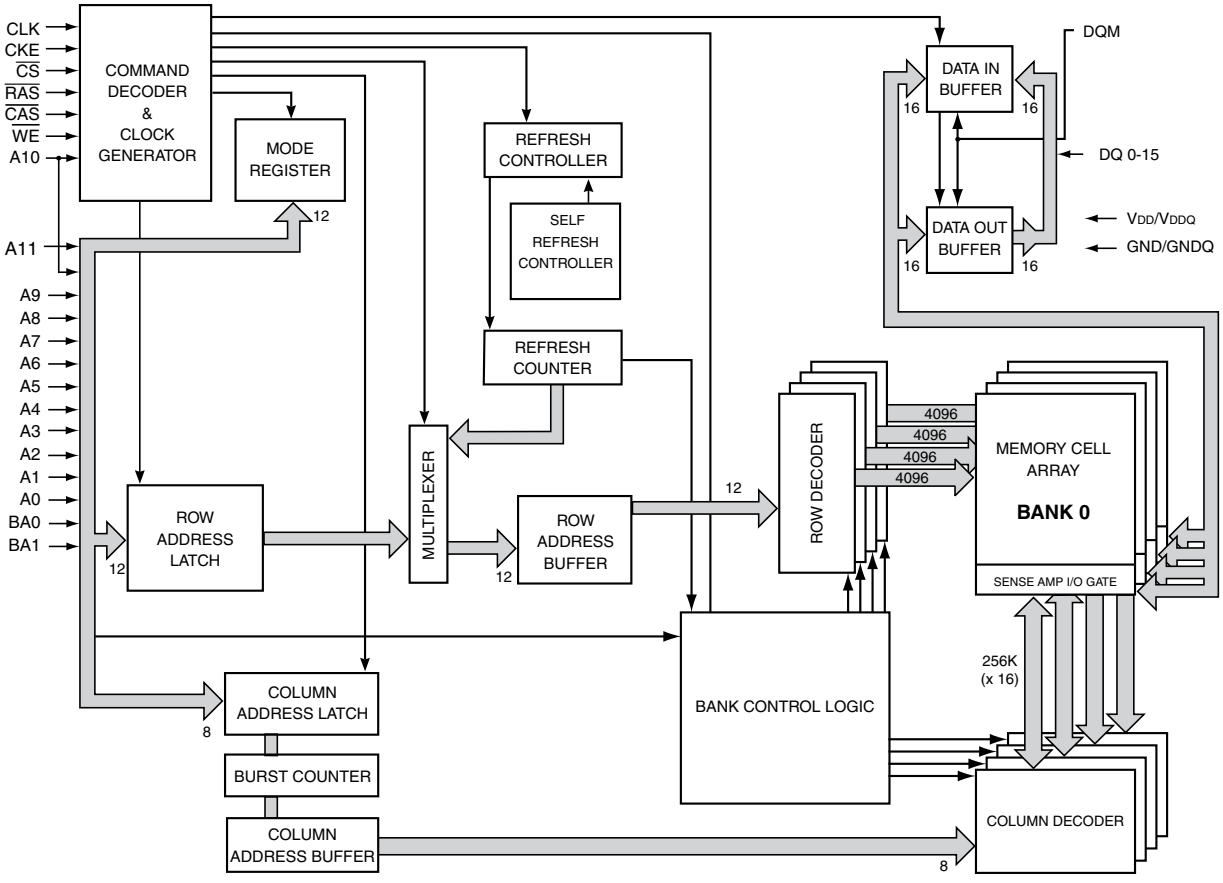

AK4424ET (HDMI : U2305)

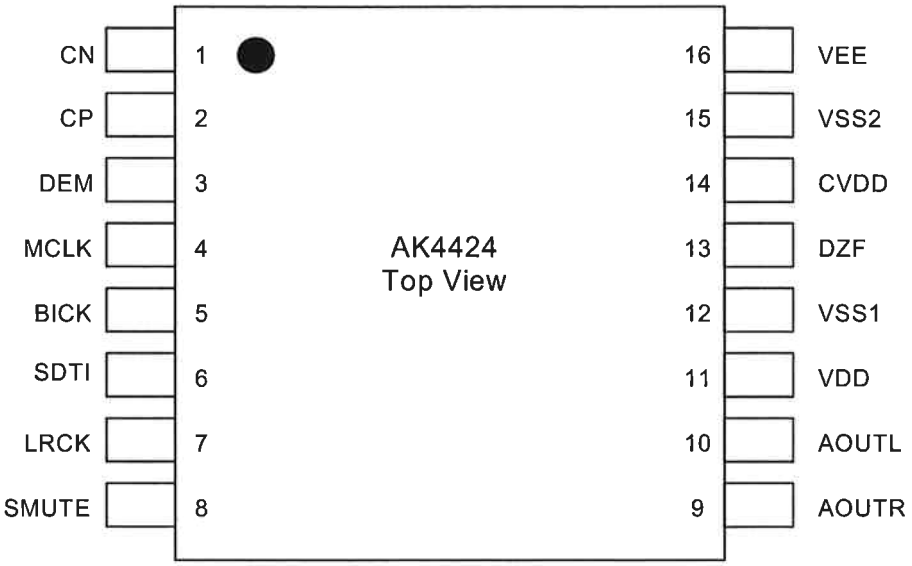

AK4424ET Block Diagram

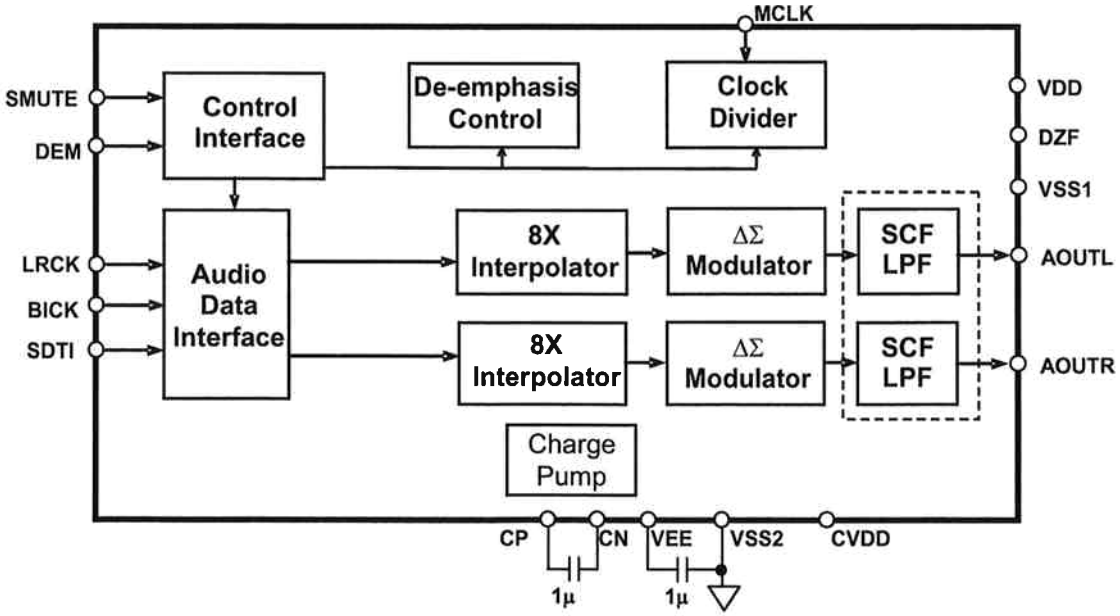

AK4358VQ (HDMI : U2102)

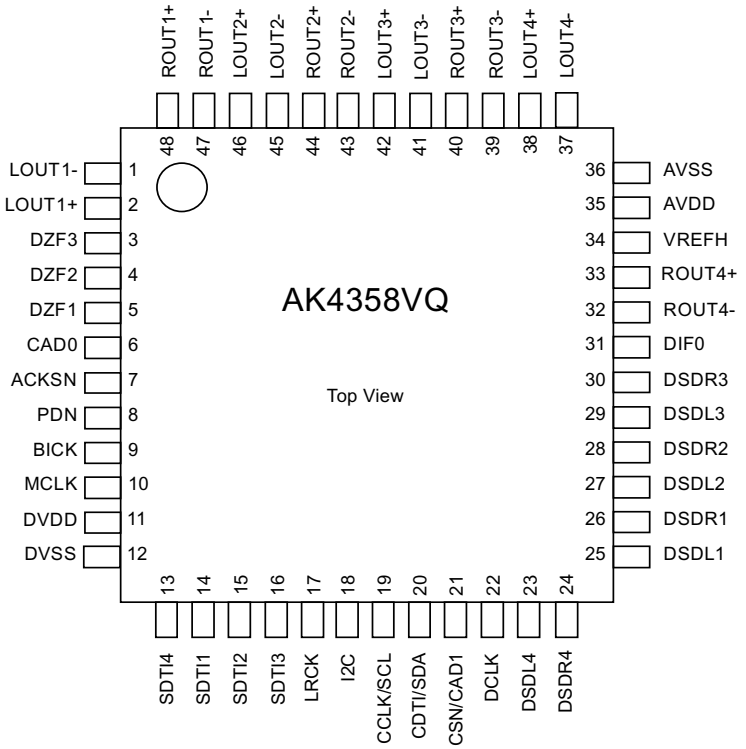

AK4358VQ Pin Function

No.	Pin Name	I/O	Function
1	LOUT1-	O	DAC1 Lch Negative Analog Output Pin
2	LOUT1+	O	DAC1 Lch Positive Analog Output Pin
3	DZF3	O	Zero Input Detect 3 Pin
4	DZF2	O	Zero Input Detect 2 Pin
5	DZF1	O	Zero Input Detect 1 Pin
6	CAD0	I	Chip Address 0 Pin
7	ACKSN	I	Auto Setting Mode Disable Pin (Pull-down Pin) "L": Auto Setting Mode, "H": Manual Setting Mode
8	PDN	I	Power-Down Mode Pin When at "L", the AK4358 is in the power-down mode and is held in reset. The AK4358 should always be reset upon power-up.
9	BICK	I	Audio Serial Data Clock Pin
10	MCLK	I	Master Clock Input Pin An external TTL clock should be input on this pin.
11	DVDD	-	Digital Power Supply Pin, +4.75~+5.25V
12	DVSS	-	Digital Ground Pin
13	SDTI4	I	DAC4 Audio Serial Data Input Pin
14	SDTI1	I	DAC1 Audio Serial Data Input Pin
15	SDTI2	I	DAC2 Audio Serial Data Input Pin
16	SDTI3	I	DAC3 Audio Serial Data Input Pin
17	LRCK	I	L/R Clock Pin
18	I2C	I	Control Mode Select Pin "L": 3-wire Serial, "H": I^2C Bus
19	CCLK/SCL	I	Control Data Clock Pin I2C = "L": CCLK (3-wire Serial), I2C = "H": SCL (I^2C Bus)
20	CDTI/SDA	I/O	Control Data Input Pin I2C = "L": CDTI (3-wire Serial), I2C = "H": SDA (I^2C Bus)
21	CSN/CAD1	I	Chip Select Pin I2C = "L": CSN (3-wire Serial), I2C = "H": CAD1 (I^2C Bus)
22	DCLK	I	DSD Clock Pin
23	DSDL4	I	DAC4 DSD Lch Data Input Pin
24	DSDR4	I	DAC4 DSD Rch Data Input Pin
25	DSDL1	I	DAC1 DSD Lch Data Input Pin
26	DSDR1	I	DAC1 DSD Rch Data Input Pin
27	DSDL2	I	DAC2DSD Lch Data Input Pin
28	DSDR2	I	DAC2 DSD Rch Data Input Pin

29	DSDL3	I	DAC3 DSD Lch Data Input Pin
30	DSDR3	I	DAC3 DSD Rch Data Input Pin
31	DIF0	I	Audio Data Interface Format 0 Pin
32	ROUT4-	O	DAC4 Rch Negative Analog Output Pin
33	ROUT4+	O	DAC4 Rch Positive Analog Output Pin
34	VREFH	I	Positive Voltage Reference Input Pin
35	AVDD	-	Analog Power Supply Pin, +4.75~+5.25V
36	AVSS	-	Analog Ground Pin
37	LOUT4-	O	DAC4 Lch Negative Analog Output Pin
38	LOUT4+	O	DAC4 Lch Positive Analog Output Pin
39	ROUT3-	O	DAC3 Rch Negative Analog Output Pin
40	ROUT3+	O	DAC3 Rch Positive Analog Output Pin
41	LOUT3-	O	DAC3 Lch Negative Analog Output Pin
42	LOUT3+	O	DAC3 Lch Positive Analog Output Pin
43	ROUT2-	O	DAC2 Rch Negative Analog Output Pin
44	ROUT2+	O	DAC2 Rch Positive Analog Output Pin
45	LOUT2-	O	DAC2 Lch Negative Analog Output Pin
46	LOUT2+	O	DAC2 Lch Positive Analog Output Pin
47	ROUT1-	O	DAC1 Rch Negative Analog Output Pin
48	ROUT1+	O	DAC1 Rch Positive Analog Output Pin

Note: All input pins except pull-down pin should not be left floating.

AK5358BET (HDMI : U2101)

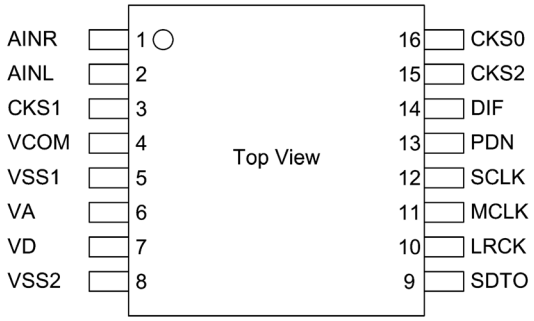

AK5358BET Pin Function

No.	Pin Name	I/O	Function
1	AINR	I	Rch Analog Input Pin
2	AINL	I	Lch Analog Input Pin
3	CKS1	I	Mode Select 1 Pin
4	VCOM	O	Common Voltage Output Pin, VA/2 Bias voltage of ADC input.
5	VSS1	-	Ground Pin
6	VA	-	Analog Power Supply Pin, 4.5 ~ 5.5V
7	VD	-	Digital Power Supply Pin, 2.7 ~ 5.5V
8	VSS2	-	Ground Pin
9	SDTO	O	Audio Serial Data Output Pin "L" Output at Power-down mode.
10	LRCK	I/O	Output Channel Clock Pin "L" Output in Master Mode at Power-down mode.
11	MCLK	I	Master Clock Input Pin
12	SCLK	I/O	Audio Serial Data Clock Pin "L" Output in Master Mode at Power-down mode.
13	PDN	I	Power Down Mode & Reset Pin "H": Power up, "L": Power down & Reset
14	DIF	I	Audio Interface Format Pin "H": 24bit I^2S Compatible, "L": 24bit MSB justified
15	CKS2	I	Mode Select 2 Pin
16	CKS0	I	Mode Select 0 Pin

R2A15220FP (AV : IC801)

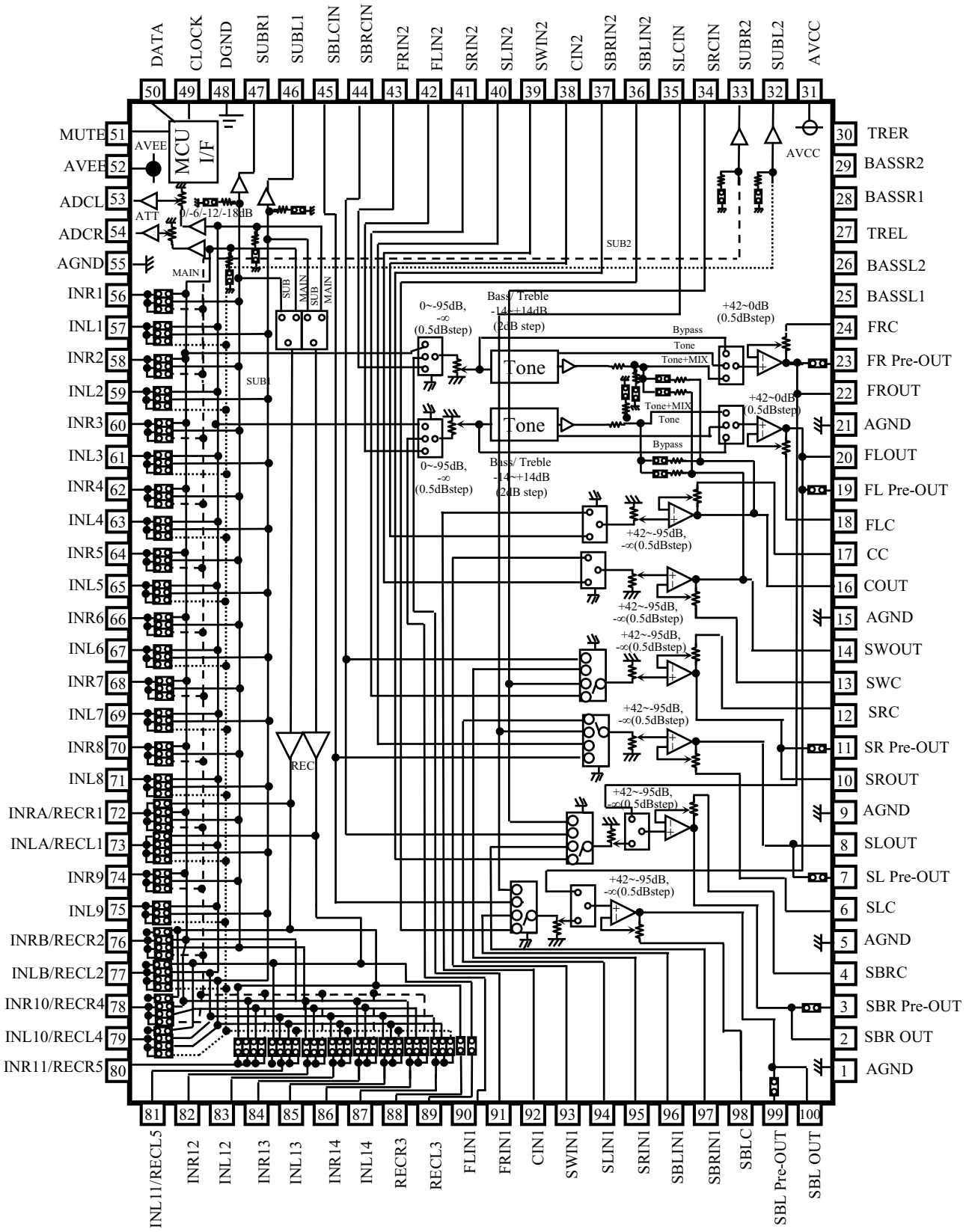

R2A15220FP Pin Function

PIN No.	Name	Function
22,20, 16,14, 10, 8, 2, 100	FROUT,FLOUT, COUT,SWOUT, SROUT, SLOUT, SBROUT,SBLOUT	Output pin of FL/FR/C/SW/SL/SR/SBL/SBR channel
23,19, 11, 7, 3, 99	FR Pre-out,FL Pre-out, SR Pre-out, SL Pre-out, SBR Pre-out,SBL Pre-out	Pre-output pin of FL/FR/SL/SR/SBL/SBR channel
24,18, 17,13, 12, 6, 4, 98	FRC,FLC, CC,SWC, SRC,SLC, SBRC,SBLC	Connects capacitor for reducing click noise of L/R/C/SW/SL/SR/SBL/SBR channel volume
1,5,9,15, 21,55,98	AGND	Analog ground of internal circuit
27,30	TREL, TRER	Frequency characteristic setting pin of L/R channel tone control (Treble)
25,26, 28,29	BASSL1,BASSL2 BASSR1,BASSR2	Frequency characteristic setting pin of L/R channel tone control (Bass)
31	AVCC	Positive power supply to internal circuit
43,42, 41,40, 39,38, 37,36	FRIN2, FLIN2, SRN2,SLIN2, SWIN2,CIN2, SBRIN2,SBLIN2	Multi Input pin of L/R/C/SW/SL/SR/SBL/SBR channel (Multi IN 1/2)
90,91, 92,93, 94,95, 96,97	FLIN1, FRIN1, CIN1,SWIN1, SLIN1,SRIN1, SBLIN1,SBRIN1	
48	DGND	Digital ground of internal circuit
49	DATA	Input pin of control data
50	CLOCK	Input pin of control clock
52	AVEE	Negative power supply to internal circuit
57,59,61,63, 65,67,69,71, 75,83,85,87	INL1,INL2, INL3,INL4, INL5,INL6,INL7,INL8, INL9,INL12,INL13,INL14	Input pin of L/R channel (Input Selector)
56,58,60,62, 64,6668,70, 74,82,84,86	INR1,INR2, INR3,INR4, INR5,INR6,INR7,INR8, INR9,INR12,INR13,INR14	
51	MUTE	Outside Mute Control PIN
44,45 34,35	SBRCIN,SBLCIN SRCIN,SLCIN	3rd Multi Input pin for SBL/SBR/SL/SR channel Volume that is able to swap SBR/SBL with SR/SL
46,47 33,32	SUBL1,SUBR1 SUBL2,SUBR2	Output pin for L/R channel SUB1/SUB2 Output
53,54	ADCL, ADCR	Output pin for L/R channel ADC
88,89	RECR3,RECL3	Output pin for L/R channel REC Output
72,73, 76,77, 78,79 80,81	INRA/RECR1,INLA/RECL1, INRB/RECR2,INLB/RECL2, INR10/RECR4,INL10/RECL4, INR11/RECR5,INL11/RECL5	Input pin of L/R channel (Input Selector)/ Output pin for L/R channel REC Output

EPM3032A (HDMI : U1707)

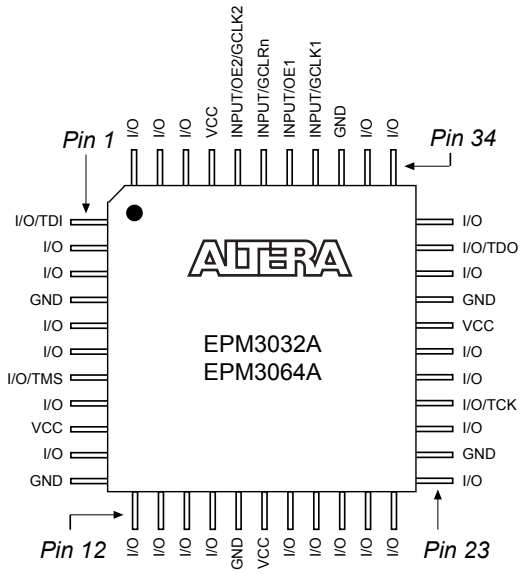

LC74781 (AV : IC810)

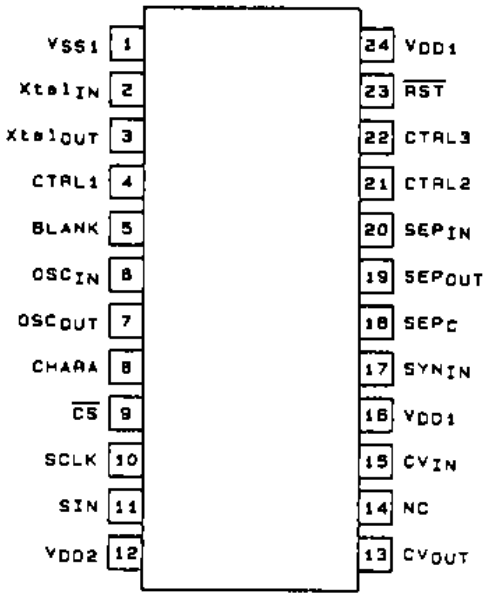

NJM2586AM (AV : IC811)

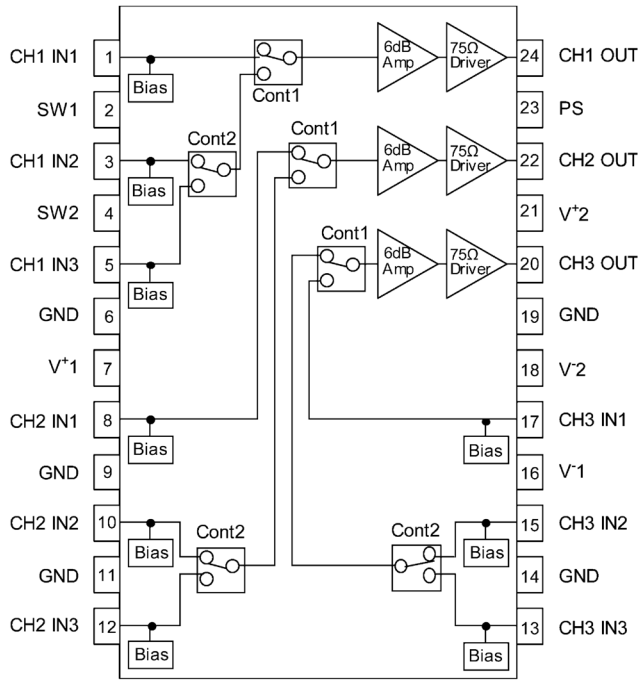

2. FL DISPLAY

FLD (18-ST-13GINK) (FRONT : FLT301)

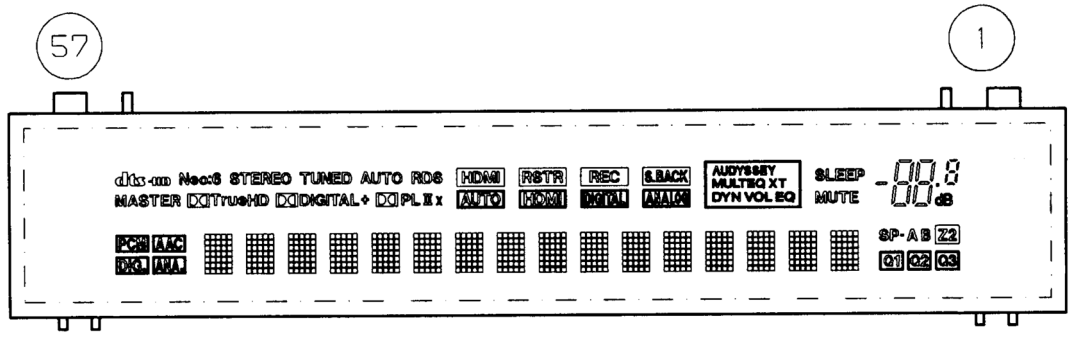

PIN CONNECTION

PIN NO.	57	56	55	54	53	52	51
CONNECTION	F2	NX	NP	NP	GND	VFL	VDDH

PIN NO.	50	49	48	47	46	45	44	43	42	41	40	39	38	37	36	35	34	33	32	31	30	29	28	27	26	25	24	23	22	21	20	19	18	17	16	15	14	13	12	11	10	9	8	7	6	5	4	3	2	1
CONNECTION	VDD	OSC	RESET	CS	CP	DA	TSA	TSB	NX	NX	NX	NX	NX	NX	NX	NX	NX	NX	NX	NX	NX	NX	NX	NX	NX	NX	NX	NX	NX	NX	NX	NX	NX	NX	NX	NX	NX	NX	NX	NX	18G	17G	Q18G	Q17G	NP	NP	NX	F1

NOTE
1) F1,F2 --- Filament
2) NP ------ No pin
3) DL ------ Datum Line
4) NX ------ No extend pin
5) GND ----- GND pin
6) VFL ----- VFD Driving Voltage sink pin
7) VDD ----- Logic Voltage Supply pin
8) VDDH ------ VFD Driving Voltage Source pin
9) CP ------ Shift Register Clock
10) DA ------ Serial Data Input
11) TSA,B --- Test pin
12) $\overline{CS}$ ------ Chip Select Input pin
13) $\overline{RESET}$ --- Reset Input
14) OSC ----- Pin for self-oscillation
15) Solder composition is Sn-3Ag-0.5Cu.
16) 17G,18G ----- Grid
17) Q17G,Q18G ----- Driver Output Port.
18) NC ------ No connection
(NC pin should be electrically open on the PC board.)
19) Field of vision is a minimum of 21.8° from the lower side.

GRID ASSIGNMENT

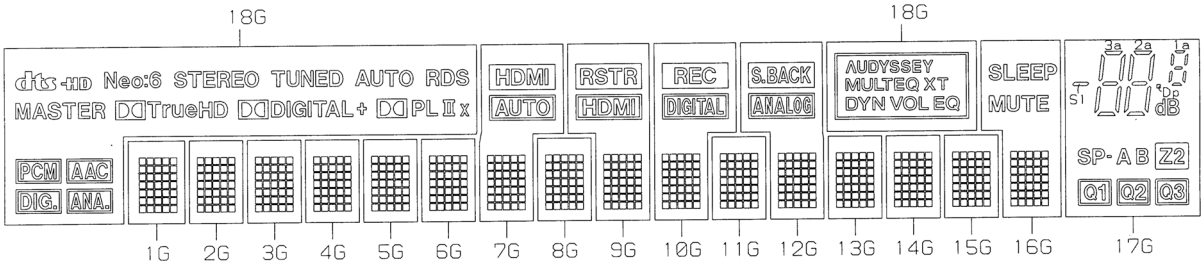

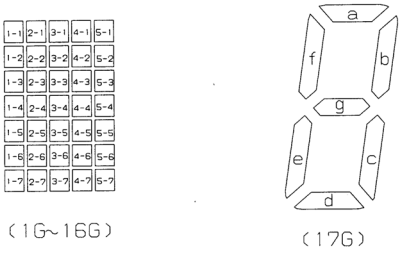

ANODE CONNECTION

	1G	2G	3G	4G	5G	6G	7G	8G	9G	10G	11G	12G	13G	14G	15G	16G	17G	18G
D0	1-1	1-1	1-1	1-1	1-1	1-1	1-1	1-1	1-1	1-1	1-1	1-1	1-1	1-1	1-1	1-1	S1	PCM
D1	2-1	2-1	2-1	2-1	2-1	2-1	2-1	2-1	2-1	2-1	2-1	2-1	2-1	2-1	2-1	2-1	3d	AAC
D2	3-1	3-1	3-1	3-1	3-1	3-1	3-1	3-1	3-1	3-1	3-1	3-1	3-1	3-1	3-1	3-1	2d	S2
D3	4-1	4-1	4-1	4-1	4-1	4-1	4-1	4-1	4-1	4-1	4-1	4-1	4-1	4-1	4-1	4-1	3e	EQ
D4	5-1	5-1	5-1	5-1	5-1	5-1	5-1	5-1	5-1	5-1	5-1	5-1	5-1	5-1	5-1	5-1	2e	VOL
D5	1-2	1-2	1-2	1-2	1-2	1-2	1-2	1-2	1-2	1-2	1-2	1-2	1-2	1-2	1-2	1-2	3c	DYN
D6	2-2	2-2	2-2	2-2	2-2	2-2	2-2	2-2	2-2	2-2	2-2	2-2	2-2	2-2	2-2	2-2	2c	XT
D7	3-2	3-2	3-2	3-2	3-2	3-2	3-2	3-2	3-2	3-2	3-2	3-2	3-2	3-2	3-2	3-2	3g	MULTEQ
D8	4-2	4-2	4-2	4-2	4-2	4-2	4-2	4-2	4-2	4-2	4-2	4-2	4-2	4-2	4-2	4-2	2g	AUDYSSEY
D9	5-2	5-2	5-2	5-2	5-2	5-2	5-2	5-2	5-2	5-2	5-2	5-2	5-2	5-2	5-2	5-2	3f	X
D10	1-3	1-3	1-3	1-3	1-3	1-3	1-3	1-3	1-3	1-3	1-3	1-3	1-3	1-3	1-3	1-3	2f	II
D11	2-3	2-3	2-3	2-3	2-3	2-3	2-3	2-3	2-3	2-3	2-3	2-3	2-3	2-3	2-3	2-3	3b	PL
D12	3-3	3-3	3-3	3-3	3-3	3-3	3-3	3-3	3-3	3-3	3-3	3-3	3-3	3-3	3-3	3-3	2b	DD (PL)
D13	4-3	4-3	4-3	4-3	4-3	4-3	4-3	4-3	4-3	4-3	4-3	4-3	4-3	4-3	4-3	4-3	3a	+
D14	5-3	5-3	5-3	5-3	5-3	5-3	5-3	5-3	5-3	5-3	5-3	5-3	5-3	5-3	5-3	5-3	2a	MASTER
D15	1-4	1-4	1-4	1-4	1-4	1-4	1-4	1-4	1-4	1-4	1-4	1-4	1-4	1-4	1-4	1-4	Dp	RDS
D16	2-4	2-4	2-4	2-4	2-4	2-4	2-4	2-4	2-4	2-4	2-4	2-4	2-4	2-4	2-4	2-4	dB	AUTO
D17	3-4	3-4	3-4	3-4	3-4	3-4	3-4	3-4	3-4	3-4	3-4	3-4	3-4	3-4	3-4	3-4	1d	TUNED
D18	4-4	4-4	4-4	4-4	4-4	4-4	4-4	4-4	4-4	4-4	4-4	4-4	4-4	4-4	4-4	4-4	1e	STEREO
D19	5-4	5-4	5-4	5-4	5-4	5-4	5-4	5-4	5-4	5-4	5-4	5-4	5-4	5-4	5-4	5-4	1c	Neo:6
D20	1-5	1-5	1-5	1-5	1-5	1-5	1-5	1-5	1-5	1-5	1-5	1-5	1-5	1-5	1-5	1-5	1g	HD
D21	2-5	2-5	2-5	2-5	2-5	2-5	2-5	2-5	2-5	2-5	2-5	2-5	2-5	2-5	2-5	2-5	1f	dts
D22	3-5	3-5	3-5	3-5	3-5	3-5	3-5	3-5	3-5	3-5	3-5	3-5	3-5	3-5	3-5	3-5	1b	–
D23	4-5	4-5	4-5	4-5	4-5	4-5	4-5	4-5	4-5	4-5	4-5	4-5	4-5	4-5	4-5	4-5	1a	–
D24	5-5	5-5	5-5	5-5	5-5	5-5	5-5	5-5	5-5	5-5	5-5	5-5	5-5	5-5	5-5	5-5	SP-	–
D25	1-6	1-6	1-6	1-6	1-6	1-6	1-6	1-6	1-6	1-6	1-6	1-6	1-6	1-6	1-6	1-6	A	–
D26	2-6	2-6	2-6	2-6	2-6	2-6	2-6	2-6	2-6	2-6	2-6	2-6	2-6	2-6	2-6	2-6	B	–
D27	3-6	3-6	3-6	3-6	3-6	3-6	3-6	3-6	3-6	3-6	3-6	3-6	3-6	3-6	3-6	3-6	Z2	–
D28	4-6	4-6	4-6	4-6	4-6	4-6	4-6	4-6	4-6	4-6	4-6	4-6	4-6	4-6	4-6	4-6	Q1	–
D29	5-6	5-6	5-6	5-6	5-6	5-6	5-6	5-6	5-6	5-6	5-6	5-6	5-6	5-6	5-6	5-6	Q2	–
D30	1-7	1-7	1-7	1-7	1-7	1-7	1-7	1-7	1-7	1-7	1-7	1-7	1-7	1-7	1-7	1-7	Q3	–
D31	2-7	2-7	2-7	2-7	2-7	2-7	2-7	2-7	2-7	2-7	2-7	2-7	2-7	2-7	2-7	2-7	–	–
D32	3-7	3-7	3-7	3-7	3-7	3-7	3-7	3-7	3-7	3-7	3-7	3-7	3-7	3-7	3-7	3-7	–	–
D33	4-7	4-7	4-7	4-7	4-7	4-7	4-7	4-7	4-7	4-7	4-7	4-7	4-7	4-7	4-7	4-7	–	DIG.
D34	5-7	5-7	5-7	5-7	5-7	5-7	5-7	5-7	5-7	5-7	5-7	5-7	5-7	5-7	5-7	5-7	–	ANA.
AD1	–	–	–	–	–	–	AUTO	–	HDMI	DIGITAL	–	ANALOG	–	–	–	MUTE	–	DDDIGITAL
AD2	–	–	–	–	–	–	HDMI	–	RSTR	REC	–	S.BACK	–	–	–	SLEEP	–	DDTrueHD

PARTS LIST OF P.C.B. UNIT

* Parts for which "nsp" is indicated on this table cannot be supplied.
* The parts listed below are for maintenance only, might differ from the parts used in the unit in appearances or dimensions.

Note: The symbols in the column "Remarks" indicate the following destinations.

Note: The symbols in the column "Remarks" indicate the following destinations.

U : North America model
N : Europe model
B : Black model
SG : Silver gold model

PCB 7CH_AMP ASS'Y ⚠3

	Ref. No.	Part No.	Part Name	Remarks		Q'ty	New
SEMICONDUCTORS GROUP							
	Q401	00D2710314903	TR 2SA KTA1024Y		J5001024Y0050S		
	Q403	00D2710318909	TR 2SA 2N5401S		J520254010010S		
	Q404	00D9960018706	TR 2SD2390-Y		J5032390Y0000S		
	Q405	00D9600196302	TR KTA1268BL		J5001268B0050S		
	Q406	00D2730479909	TR 2SC 2N5551S		J522255510010S		
	Q407,408	00D9600196302	TR KTA1268BL		J5001268B0050S		
	Q409	963219003340S	TR 2SC KTC3964		J5023964000010S		
	Q410	00D9960018706	TR 2SB1560-Y		J5011560Y0000S		
	Q412	00D2730471907	TR 2SC KTC3206Y		J5023206Y0050S		
	Q413	00D2710314903	TR 2SA KTA1024Y		J5001024Y0050S		
	Q415	00D2710318909	TR 2SA 2N5401S		J520254010010S		
	Q416	00D9960018706	TR 2SD2390-Y		J5032390Y0000S		
	Q417	00D9600196302	TR KTA1268BL		J5001268B0050S		
	Q418	00D2730479909	TR 2SC 2N5551S		J522255510010S		
	Q419,420	00D9600196302	TR KTA1268BL		J5001268B0050S		
	Q421	963219003340S	TR 2SC KTC3964		J5023964000010S		
	Q422	00D9960018706	TR 2SB1560-Y		J5011560Y0000S		
	Q424	00D2730471907	TR 2SC KTC3206Y		J5023206Y0050S		
	Q425	00D2710314903	TR 2SA KTA1024Y		J5001024Y0050S		
	Q427	00D2710318909	TR 2SA 2N5401S		J520254010010S		
	Q428	00D9960018706	TR 2SD2390-Y		J5032390Y0000S		
	Q430	00D2730479909	TR 2SC 2N5551S		J522255510010S		
	Q431,432	00D9600196302	TR KTA1268BL		J5001268B0050S		
	Q433	963219003340S	TR 2SC KTC3964		J5023964000010S		
	Q434	00D9960018706	TR 2SB1560-Y		J5011560Y0000S		
	Q436	00D2730471907	TR 2SC KTC3206Y		J5023206Y0050S		
	Q437	00D2710314903	TR 2SA KTA1024Y		J5001024Y0050S		
	Q439	00D2710318909	TR 2SA 2N5401S		J520254010010S		
	Q440	00D9960018706	TR 2SD2390-Y		J5032390Y0000S		
	Q442	00D2730479909	TR 2SC 2N5551S		J522255510010S		
	Q443,444	00D9600196302	TR KTA1268BL		J5001268B0050S		
	Q445	963219003340S	TR 2SC KTC3964		J5023964000010S		
	Q446	00D9960018706	TR 2SB1560-Y		J5011560Y0000S		
	Q448	00D2730471907	TR 2SC KTC3206Y		J5023206Y0050S		
	Q449	00D2710314903	TR 2SA KTA1024Y		J5001024Y0050S		
	Q451	00D2710318909	TR 2SA 2N5401S		J520254010010S		
	Q452	00D9960018706	TR 2SD2390-Y		J5032390Y0000S		
	Q454	00D2730479909	TR 2SC 2N5551S		J522255510010S		
	Q455,456	00D9600196302	TR KTA1268BL		J5001268B0050S		
	Q457	963219003340S	TR 2SC KTC3964		J5023964000010S		
	Q458	00D9960018706	TR 2SB1560-Y		J5011560Y0000S		
	Q460	00D2730471907	TR 2SC KTC3206Y		J5023206Y0050S		
	Q461	00D2710314903	TR 2SA KTA1024Y		J5001024Y0050S		
	Q463	00D2710318909	TR 2SA 2N5401S		J520254010010S		

	Ref. No.	Part No.	Part Name	Remarks		Q'ty	New
	Q464	00D9960018706	TR 2SD2390-Y		J5032390Y0000S		
	Q466	00D2730479909	TR 2SC 2N5551S		J522255510010S		
	Q467,468	00D9600196302	TR KTA1268BL		J5001268B0050S		
	Q469	963219003340S	TR 2SC KTC3964		J502396400010S		
	Q470	00D9960018706	TR 2SB1560-Y		J5011560Y0000S		
	Q472	00D2730471907	TR 2SC KTC3206Y		J5023206Y0050S		
	Q473	00D2710314903	TR 2SA KTA1024Y		J5001024Y0050S		
	Q475	00D2710318909	TR 2SA 2N5401S		J520254010010S		
	Q476	00D9960018706	TR 2SD2390-Y		J5032390Y0000S		
	Q478	00D2730479909	TR 2SC 2N5551S		J522255510010S		
	Q479,480	00D9600196302	TR KTA1268BL		J5001268B0050S		
	Q481	963219003340S	TR 2SC KTC3964		J502396400010S		
	Q482	00D9960018706	TR 2SB1560-Y		J5011560Y0000S		
	Q484	00D2730471907	TR 2SC KTC3206Y		J5023206Y0050S		
	D402	00D9600197000	D,SWITCHING KDS160(UF) /USC		K005016000010S		
	D403,404	00D2760401905	D,SWITCHING 1SS133T		K000013300520S		
	D408	00D9600197000	D,SWITCHING KDS160(UF) /USC		K005016000010S		
	D409,410	00D2760401905	D,SWITCHING 1SS133T		K000013300520S		
	D414	00D9600197000	D,SWITCHING KDS160(UF) /USC		K005016000010S		
	D415,416	00D2760401905	D,SWITCHING 1SS133T		K000013300520S		
	D420	00D9600197000	D,SWITCHING KDS160(UF) /USC		K005016000010S		
	D421,422	00D2760401905	D,SWITCHING 1SS133T		K000013300520S		
	D426	00D9600197000	D,SWITCHING KDS160(UF) /USC		K005016000010S		
	D427,428	00D2760401905	D,SWITCHING 1SS133T		K000013300520S		
	D432	00D9600197000	D,SWITCHING KDS160(UF) /USC		K005016000010S		
	D433,434	00D2760401905	D,SWITCHING 1SS133T		K000013300520S		
	D438	00D9600197000	D,SWITCHING KDS160(UF) /USC		K005016000010S		
	D439,440	00D2760401905	D,SWITCHING 1SS133T		K000013300520S		
	D457,458	00D9600197000	D,SWITCHING KDS160(UF) /USC		K005016000010S		
	ZD401	00D2760643983	D,ZENER MTZJ5.1A		K06005R134520S		
	ZD402,403	00D9630047502	D,ZENER MTZJ3.3B		K06003R344520S		
	ZD404	00D2760643983	D,ZENER MTZJ5.1A		K06005R134520S		
	ZD405,406	00D9630047502	D,ZENER MTZJ3.3B		K06003R344520S		
	ZD407	00D2760643983	D,ZENER MTZJ5.1A		K06005R134520S		
	ZD408,409	00D9630047502	D,ZENER MTZJ3.3B		K06003R344520S		
	ZD410	00D2760643983	D,ZENER MTZJ5.1A		K06005R134520S		
	ZD411,412	00D9630047502	D,ZENER MTZJ3.3B		K06003R344520S		
	ZD413	00D2760643983	D,ZENER MTZJ5.1A		K06005R134520S		
	ZD414,415	00D9630047502	D,ZENER MTZJ3.3B		K06003R344520S		
	ZD416	00D2760643983	D,ZENER MTZJ5.1A		K06005R134520S		
	ZD417,418	00D9630047502	D,ZENER MTZJ3.3B		K06003R344520S		
	ZD419	00D2760643983	D,ZENER MTZJ5.1A		K06005R134520S		
	ZD420,421	00D9630047502	D,ZENER MTZJ3.3B		K06003R344520S		
RESISTORS GROUP							
	R404	963125003140S	R,METAL FILM 5.6K-J,1W		C060056265050S		
	R406	963252004160S	POSISTOR 18BC471QB5RB		F320184710050S		
	R408	963125003140S	R,METAL FILM 5.6K-J,1W		C060056265050S		
	R415	963125012630S	R,METAL FILM 22-J,1W	FLAMERETARDANT	C060022065050S		
	R424,425	00D9630345903	R,FIXED 2WJ-0.47	FLAMERETARDANT	N113136647820S		
	R430,431	00D9630345903	R,FIXED 2WJ-0.47	FLAMERETARDANT	N113136647820S		

	Ref. No.	Part No.	Part Name	Remarks		Q'ty	New
	R434	nsp	R,METAL FILM 3.3K-J,1W		C060033265050S		
	R439	9631250012630S	R,METAL FILM 22-J,1W	FLAMERETARDANT	C060022065050S		
	R441	00D9639005642	R,METAL FILM 1.2K-J,1W		C060012265050S		
	R443	nsp	R,METAL FILM 47-J,1W		C060047065060S		
	R445	9631250003140S	R,METAL FILM 5.6K-J,1W		C060056265050S		
	R449	2523100006520S	POSISTOR PRF18BD471QB5RB		F320184710150S		
	R450	9632520041605	POSISTOR 18BC471QB5RB		F320184710050S		
	R451	9631250003140S	R,METAL FILM 5.6K-J,1W		C060056265050S		
	R458	9631250012630S	R,METAL FILM 22-J,1W	FLAMERETARDANT	C060022065050S		
	R464	2523100006520S	POSISTOR PRF18BD471QB5RB		F320184710150S		
	R467,468	00D9630345903	R,FIXED 2WJ-0.47	FLAMERETARDANT	N113136647820S		
	R474,475	00D9630345903	R,FIXED 2WJ-0.47	FLAMERETARDANT	N113136647820S		
	R478	nsp	R,METAL FILM 3.3K-J,1W		C060033265050S		
	R483	9631250012630S	R,METAL FILM 22-J,1W	FLAMERETARDANT	C060022065050S		
	R485	00D9639005642	R,METAL FILM 1.2K-J,1W		C060012265050S		
	R487	nsp	R,METAL FILM 47-J,1W		C060047065060S		
	R489	9631250003140S	R,METAL FILM 5.6K-J,1W		C060056265050S		
	R493	00D9630337908	R,METAL 33-J,1W	FLAMERETARDANT	C060033065050S		
	R494	9632520041605	POSISTOR 18BC471QB5RB		F320184710050S		
	R495	9631250003140S	R,METAL FILM 5.6K-J,1W		C060056265050S		
	R502	9631250012630S	R,METAL FILM 22-J,1W	FLAMERETARDANT	C060022065050S		
	R511,512	00D9630345903	R,FIXED 2WJ-0.47	FLAMERETARDANT	N113136647820S		
	R517,518	00D9630345903	R,FIXED 2WJ-0.47	FLAMERETARDANT	N113136647820S		
	R521	nsp	R,METAL FILM 3.3K-J,1W		C060033265050S		
	R526	9631250012630S	R,METAL FILM 22-J,1W	FLAMERETARDANT	C060022065050S		
	R528	00D9639005642	R,METAL FILM 1.2K-J,1W		C060012265050S		
	R530	nsp	R,METAL FILM 47-J,1W		C060047065060S		
	R534	9631250003140S	R,METAL FILM 5.6K-J,1W		C060056265050S		
	R537	9632520041605	POSISTOR 18BC471QB5RB		F320184710050S		
	R538	9631250003140S	R,METAL FILM 5.6K-J,1W		C060056265050S		
	R545	9631250012630S	R,METAL FILM 22-J,1W	FLAMERETARDANT	C060022065050S		
	R551	00D9639005639	R,METAL FILM 100-J,1W	FLAMERETARDANT	C060010165060S		
	R554,555	00D9630345903	R,FIXED 2WJ-0.47	FLAMERETARDANT	N113136647820S		
	R561,562	00D9630345903	R,FIXED 2WJ-0.47	FLAMERETARDANT	N113136647820S		
	R564	nsp	R,METAL FILM 3.3K-J,1W		C060033265050S		
	R569	9631250012630S	R,METAL FILM 22-J,1W	FLAMERETARDANT	C060022065050S		
	R571	00D9639005642	R,METAL FILM 1.2K-J,1W		C060012265050S		
	R573	nsp	R,METAL FILM 47-J,1W		C060047065060S		
	R577	9631250003140S	R,METAL FILM 5.6K-J,1W		C060056265050S		
	R580	9632520041605	POSISTOR 18BC471QB5RB		F320184710050S		
	R581	9631250003140S	R,METAL FILM 5.6K-J,1W		C060056265050S		
	R588	9631250012630S	R,METAL FILM 22-J,1W	FLAMERETARDANT	C060022065050S		
	R597,598	00D9630345903	R,FIXED 2WJ-0.47	FLAMERETARDANT	N113136647820S		
	R603,604	00D9630345903	R,FIXED 2WJ-0.47	FLAMERETARDANT	N113136647820S		
	R607	nsp	R,METAL FILM 3.3K-J,1W		C060033265050S		
	R612	9631250012630S	R,METAL FILM 22-J,1W	FLAMERETARDANT	C060022065050S		
	R614	00D9639005642	R,METAL FILM 1.2K-J,1W		C060012265050S		
	R616	nsp	R,METAL FILM 47-J,1W		C060047065060S		
	R620	9631250003140S	R,METAL FILM 5.6K-J,1W		C060056265050S		
	R623	9632520041605	POSISTOR 18BC471QB5RB		F320184710050S		
	R624	9631250003140S	R,METAL FILM 5.6K-J,1W		C060056265050S		
	R631	9631250012630S	R,METAL FILM 22-J,1W	FLAMERETARDANT	C060022065050S		
	R640,641	00D9630345903	R,FIXED 2WJ-0.47	FLAMERETARDANT	N113136647820S		
	R646,647	00D9630345903	R,FIXED 2WJ-0.47	FLAMERETARDANT	N113136647820S		

	Ref. No.	Part No.	Part Name	Remarks		Q'ty	New
	R650	nsp	R,METAL FILM 3.3K-J,1W		C060033265050S		
	R655	963125012630S	R,METAL FILM 22-J,1W	FLAMERETARDANT	C060022065050S		
	R657	00D9639005642	R,METAL FILM 1.2K-J,1W		C060012265050S		
	R659	nsp	R,METAL FILM 47-J,1W		C060047065060S		
	R663	963125003140S	R,METAL FILM 5.6K-J,1W		C060056265050S		
	R666	963252004160S	POSISTOR 18BC471QB5RB		F320184710050S		
	R667	963125003140S	R,METAL FILM 5.6K-J,1W		C060056265050S		
	R674	963125012630S	R,METAL FILM 22-J,1W	FLAMERETARDANT	C060022065050S		
	R683,684	00D9630345903	R,FIXED 2WJ-0.47	FLAMERETARDANT	N113136647820S		
	R689,690	00D9630345903	R,FIXED 2WJ-0.47	FLAMERETARDANT	N113136647820S		
	R694	nsp	R,METAL FILM 3.3K-J,1W		C060033265050S		
	R698	963125012630S	R,METAL FILM 22-J,1W	FLAMERETARDANT	C060022065050S		
	R700	00D9639005642	R,METAL FILM 1.2K-J,1W		C060012265050S		
	R702	nsp	R,METAL FILM 47-J,1W		C060047065060S		
	VR401-407	00D9630366407	VR,SEMI CARBON EVN-DCAA03B 1KB		C541102315000S		
CAPACITORS GROUP							
	C401	nsp	C,CERAMIC 0.1UF-K/50V		D011104577160S		
	C403	nsp	C,CERAMIC 0.01UF-K/50V		D010103777160S		
	C404	00D9630234506	C,ELECT 47UF-M/50V (Pb Free)		D040470087070S		
	C405	nsp	C,CERAMIC 100PF-J/50V		D010101167160S		
	C406	nsp	C,CERAMIC 220PF-J/500V		D00422106D05CS		
	C407	00D9630234506	C,ELECT 47UF-M/50V (Pb Free)		D040470087070S		
	C408	00D9630224503	C,ELECT 22UF-M/50V		D040220087060S		
	C410	00D9609009937	C,ELECT 100UF-M/50V		D040101087060S		
	C412	nsp	C,CERAMIC 470PF-K/500V		D00447127D050S		
	C413	nsp	C,CERAMIC X7R2200PF-K/50V		D011222777200S		
	C415,416	00D9630234302	C,ELECT 10UF-M/100V		D04010008C050S		
	C418	nsp	C,CERAMIC 0.1UF-K/50V		D011104577160S		
	C419	00D9630324005	C,ELECT 100UF-M/100V		D04010108C240S		
	C420	00D9630234506	C,ELECT 47UF-M/50V (Pb Free)		D040470087070S		
	C421	nsp	C,CERAMIC 100PF-J/50V		D010101167160S		
	C422	nsp	C,CERAMIC 220PF-J/500V		D00422106D05CS		
	C423	00D9630234506	C,ELECT 47UF-M/50V (Pb Free)		D040470087070S		
	C424	00D9630224503	C,ELECT 22UF-M/50V		D040220087060S		
	C426	00D9609009937	C,ELECT 100UF-M/50V		D040101087060S		
	C428	nsp	C,CERAMIC 470PF-K/500V		D00447127D050S		
	C429	nsp	C,CERAMIC X7R2200PF-K/50V		D011222777200S		
	C431,432	00D9630234302	C,ELECT 10UF-M/100V		D04010008C050S		
	C434	nsp	C,CERAMIC 0.1UF-K/50V		D011104577160S		
	C436	00D9630234506	C,ELECT 47UF-M/50V (Pb Free)		D040470087070S		
	C437	nsp	C,CERAMIC 100PF-J/50V		D010101167160S		
	C438	nsp	C,CERAMIC 220PF-J/500V		D00422106D05CS		
	C439	00D9630234506	C,ELECT 47UF-M/50V (Pb Free)		D040470087070S		
	C440	00D9630224503	C,ELECT 22UF-M/50V		D040220087060S		
	C442	00D9609009937	C,ELECT 100UF-M/50V		D040101087060S		
	C444	nsp	C,CERAMIC 470PF-K/500V		D00447127D050S		
	C445	nsp	C,CERAMIC X7R2200PF-K/50V		D011222777200S		
	C447,448	00D9630234302	C,ELECT 10UF-M/100V		D04010008C050S		
	C450	nsp	C,CERAMIC 0.1UF-K/50V		D011104577160S		
	C452	00D9630234506	C,ELECT 47UF-M/50V (Pb Free)		D040470087070S		
	C453	nsp	C,CERAMIC 100PF-J/50V		D010101167160S		

	Ref. No.	Part No.	Part Name	Remarks		Q'ty	New
	C454	nsp	C,CERAMIC 220PF-J/500V		D00422106D05CS		
	C455	00D9630234506	C,ELECT 47UF-M/50V (Pb Free)		D040470087070S		
	C456	00D9630224503	C,ELECT 22UF-M/50V		D040220087060S		
	C458	00D9609009937	C,ELECT 100UF-M/50V		D040101087060S		
	C460	nsp	C,CERAMIC 470PF-K/500V		D00447127D050S		
	C461	nsp	C,CERAMIC X7R2200PF-K/50V		D011222777200S		
	C463,464	00D9630234302	C,ELECT 10UF-M/100V		D04010008C050S		
	C466	nsp	C,CERAMIC 0.1UF-K/50V		D011104577160S		
	C468	00D9630234506	C,ELECT 47UF-M/50V (Pb Free)		D040470087070S		
	C469	nsp	C,CERAMIC 100PF-J/50V		D010101167160S		
	C470	nsp	C,CERAMIC 220PF-J/500V		D00422106D05CS		
	C471	00D9630234506	C,ELECT 47UF-M/50V (Pb Free)		D040470087070S		
	C472	00D9630224503	C,ELECT 22UF-M/50V		D040220087060S		
	C474	00D9609009937	C,ELECT 100UF-M/50V		D040101087060S		
	C476	nsp	C,CERAMIC 470PF-K/500V		D00447127D050S		
	C477	nsp	C,CERAMIC X7R2200PF-K/50V		D011222777200S		
	C479,480	00D9630234302	C,ELECT 10UF-M/100V		D04010008C050S		
	C482	nsp	C,CERAMIC 0.1UF-K/50V		D011104577160S		
	C484	00D9630234506	C,ELECT 47UF-M/50V (Pb Free)		D040470087070S		
	C485	nsp	C,CERAMIC 100PF-J/50V		D010101167160S		
	C486	nsp	C,CERAMIC 220PF-J/500V		D00422106D05CS		
	C487	00D9630234506	C,ELECT 47UF-M/50V (Pb Free)		D040470087070S		
	C488	00D9630224503	C,ELECT 22UF-M/50V		D040220087060S		
	C490	00D9609009937	C,ELECT 100UF-M/50V		D040101087060S		
	C492	nsp	C,CERAMIC 470PF-K/500V		D00447127D050S		
	C493	nsp	C,CERAMIC X7R2200PF-K/50V		D011222777200S		
	C495,496	00D9630234302	C,ELECT 10UF-M/100V		D04010008C050S		
	C498	nsp	C,CERAMIC 0.1UF-K/50V		D011104577160S		
	C500	00D9630234506	C,ELECT 47UF-M/50V (Pb Free)		D040470087070S		
	C501	nsp	C,CERAMIC 100PF-J/50V		D010101167160S		
	C502	nsp	C,CERAMIC 220PF-J/500V		D00422106D05CS		
	C503	00D9630234506	C,ELECT 47UF-M/50V (Pb Free)		D040470087070S		
	C504	00D9630224503	C,ELECT 22UF-M/50V		D040220087060S		
	C506	00D9609009937	C,ELECT 100UF-M/50V		D040101087060S		
	C508	nsp	C,CERAMIC 470PF-K/500V		D00447127D050S		
	C509	nsp	C,CERAMIC X7R2200PF-K/50V		D011222777200S		
	C511,512	00D9630234302	C,ELECT 10UF-M/100V		D04010008C050S		
	C513,514	00D9630338402	C,ELECT 330UF-M/6.3V		D040331081050S		
	C515	00D9630324607	C,ELECT 47UF-M/10V (Pb Free)		D040470082060S		
OTHERS PARTS GROUP							
	CLAMP400,401	nsp	CLAMP WIRE(SOLDER)		4330000120000S		
	CN404	nsp	CN.WIRE 5P		L002251052620S		
	CP401	nsp	CN.WAFER 13P STRAIGHT		L101200101310S		
	CP402	nsp	CN.WAFER 5P		L102526700500S		
	CP403	nsp	CN.WAFER 10P STRAIGHT		L101200101010S		
	CP405	nsp	CN.WAFER 3P		L102526700300S		
	TP401-407	nsp	CN.WAFER 3P		L101200100320S		

PCB SPK ASS'Y

	Ref. No.	Part No.	Part Name	Remarks	ETRO	Q'ty	New
SEMICONDUCTORS GROUP							
⚠	IC100	963239010480S	IC PC123X2YFZ (DIP4P SHARP)		K6141230000010S		
⚠	IC102	231010091708S	IC TOP258MG		G200258000010S		
	IC116	212050010508S	IC KIA2431AP		J126243118010S		
	Q1-7	00D9630120704	TR KRA102S(PB)		J520010200210S		
	Q8-14	00D9630120801	TR 2SC KRC102S (NB)		J522010200210S		
	D1-7	00D9630355401	D,SWITCHING KDS4148U		K005041480030S		
	D8	00D2760401905	D,SWITCHING 1SS133T		K000013300520S		
	D9,10	963209011740S	D,RECTIFIER BRIDGE D3SB60-5000		K047036040030S		⚠3
	D100-102	00D9630328409	D,SWITCHING 1N4007		K000400700010S		
	D103	203050018706S	D,SCHOTTKY D25SC6M 60V 25A		K120256000010S		
	D104-106	00D9630328409	D,SWITCHING 1N4007		K000400700010S		
	D108	963209010430S	D,FAST RECOVERY AP01C-V1 52RE-AX		K050000015000S		
	D109,110	00D9630328409	D,SWITCHING 1N4007		K000400700010S		
	D112	00D2760401905	D,SWITCHING 1SS133T		K000013300520S		
	ZD100	963202010440S	D,ZENER MTZJ22B		K06022R044520S		
	ZD101	00D2760762958	D,ZENER MTZJ39B	U1B	K06039R044520S		
	ZD102	963202010440S	D,ZENER MTZJ22B		K06022R044520S		
	ZD103	00D2760762958	D,ZENER MTZJ39B	U1B	K06039R044520S		
	ZD104	963202010440S	D,ZENER MTZJ22B		K06022R044520S		
	ZD105	00D2760762958	D,ZENER MTZJ39B	U1B	K06039R044520S		
	ZD106,107	963202010440S	D,ZENER MTZJ22B		K06022R044520S		
	ZD108,109	00D2760762958	D,ZENER MTZJ39B	U1B	K06039R044520S		
	ZD110	963202010440S	D,ZENER MTZJ22B	U1B	K06022R044520S		
	ZD110	00D2760762958	D,ZENER MTZJ39B	N1B,N1SG	K06039R044520S		
	ZD111	00D2760762958	D,ZENER MTZJ39B	N1B,N1SG	K06039R044520S		
	ZD112	963202010440S	D,ZENER MTZJ22B		K06022R044520S		
	ZD113	00D2760762958	D,ZENER MTZJ39B	N1B,N1SG	K06039R044520S		
	ZD114	00D9600095607	D,ZENER MTZJ5.6B		K06005R644520S		
	ZD115	00D2760762958	D,ZENER MTZJ39B		K06039R044520S		
	ZD116	00D2760762958	D,ZENER MTZJ39B	N1B,N1SG	K06039R044520S		
	ZD117,118	963202010440S	D,ZENER MTZJ22B		K06022R044520S		
	ZD119	00D2760762958	D,ZENER MTZJ39B	N1B,N1SG	K06039R044520S		
RESISTORS GROUP							
	R5-17	963125010100S	R,METAL FILM 10-J 2W		C060010066050S		
	R26,27	963129007690M	RES CE 0.1-J 5W 14*17 PITCH(10MM)		C141R10069010S		
	R28-33	nsp	R,METAL FILM 2.2K-J,1W		C060022265050S		
	R34	nsp	R,METAL FILM 10K-J,1/4W		C060103063050S		
	R35,36	00D9630310501	R,METAL FILM 47K-J,1/4W		C060047363050S		
	R37,38	nsp	R,METAL FILM 470-J,2W		C060047166060S		
	R39	963125010100S	R,METAL FILM 10-J 2W		C060010066050S		
CAPACITORS GROUP							
	C1	nsp	C,FILM MI-0.047UF-J/50V		D020473167050S		
	C2	nsp	C,CERAMIC 2200PF-K/50V		D011222777160S		
	C3,4	nsp	C,FILM MI-0.047UF-J/50V		D020473167050S		

	Ref. No.	Part No.	Part Name	Remarks	ETRO	Q'ty	New	
	C5	nsp	C,CERAMIC 2200PF-K/50V		D011222777160S			
	C6	nsp	C,FILM MI-0.047UF-J/50V		D020473167050S			
	C7	nsp	C,CERAMIC 2200PF-K/50V		D011222777160S			
	C8,9	nsp	C,FILM MI-0.047UF-J/50V		D020473167050S			
	C10	nsp	C,CERAMIC 2200PF-K/50V		D011222777160S			
	C11,12	nsp	C,FILM MI-0.047UF-J/50V		D020473167050S			
	C13	nsp	C,CERAMIC 2200PF-K/50V		D011222777160S			
	C14	nsp	C,FILM MI-0.047UF-J/50V		D020473167050S			
	C15	nsp	C,CERAMIC 2200PF-K/50V		D011222777160S			
	C16,17	nsp	C,FILM MI-0.047UF-J/50V		D020473167050S			
	C18	nsp	C,CERAMIC 2200PF-K/50V		D011222777160S			
	C19	nsp	C,FILM MI-0.047UF-J/50V		D020473167050S			
	C20	nsp	C,CERAMIC 2200PF-K/50V		D011222777160S			
	C21,22	nsp	C,FILM MI-0.047UF-J/50V		D020473167050S			
	C23	nsp	C,CERAMIC 2200PF-K/50V		D011222777160S			
	C24,25	nsp	C,FILM MI-0.047UF-J/50V		D020473167050S			
	C27	nsp	C,CERAMIC 1000PF-K/50V		D011102777160S			
	C30	nsp	C,CERAMIC 1000PF-K/50V		D011102777160S			
	C33	nsp	C,CERAMIC 1000PF-K/50V		D011102777160S			
	C36	nsp	C,CERAMIC 1000PF-K/50V		D011102777160S			
	C39	nsp	C,CERAMIC 1000PF-K/50V		D011102777160S			
	C42	nsp	C,CERAMIC 1000PF-K/50V		D011102777160S			
	C45	nsp	C,CERAMIC 1000PF-K/50V		D011102777160S			
	C48	nsp	C,CERAMIC 1000PF-K/50V		D011102777160S			
	C51	nsp	C,CERAMIC 1000PF-K/50V		D011102777160S			
	C53	00D9609009937	C,ELECT 100UF-M/50V		D040101087060S			
	C54	00D9639003097	C,FILM 0.1UF-K/250V		D02010407H080S			
	C55	00D9639003107	C,ELECT 6800UF-M/63V		D040682088010S			
	C57	00D9630234205	C,ELECT 10UF-M/50V		D040100087070S			
	C58	00D9639003107	C,ELECT 6800UF-M/63V		D040682088010S			
	C60	nsp	C,ELECT 0.1UF-M/50V (Pb Free)		D040R10087080S			
	C61	00D9639003097	C,FILM 0.1UF-K/250V		D02010407H080S			
	C63	nsp	C,CERAMIC 1000PF-K/50V		D011102777160S			
⚠	C100	963132010140S	C,CERAMIC ECQU2A104ML 0.1UF		D00810408H000S			
	C102	963134010200S	C,ELECT 100UF-M/400V		D04110108K000S			
	C103	963132010120S	C,CERAMIC DEHR33A102KB2B		D00810207Q010S			
⚠	C104,105	963134011730S	C,CERAMIC DE1B3KX471KB4BL01 AC250V		D00847127H010S			⚠3
	C106-108	963134010220S	C,ELECT5600UF-M/6.3V		D041562081001S			
	C110	nsp	C,CERAMIC 0.1UF-K/25V		D011104774161S			
	C111	nsp	C,CERAMIC 4.7UF-K/6.3V		D011475571160S			
	C112	963134010190S	C,ELECT 10UF-M/50V		D041100087050S			
	C113	nsp	C,CERAMIC 0.1UF-K/25V		D011104774161S			
⚠	C115	963132011930S	C,CERAMIC DE1E3KX222MB4BL01 AC250V		D00822248H010S			⚠3
	C116	nsp	C,CERAMIC 0.1UF-K/25V		D011104774161S			
⚠	C117	963132011940S	C,CERAMIC DE2F3KY103MB3BM02 AC250V		D008103589010S			⚠3
	C118	nsp	C,CERAMIC 0.1UF-K/25V		D011104774161S			
	C119	963134010210S	C,ELECT 47UF-M/25V		D041470084050S			
	C120-123	nsp	C,CERAMIC 0.1UF-K/25V		D011104774161S			
⚠	C131	963132011940S	C,CERAMIC DE2F3KY103MB3BM02 AC250V		D008103589010S			⚠3
⚠	C133	963132011940S	C,CERAMIC DE2F3KY103MB3BM02 AC250V		D008103589010S			⚠3

	Ref. No.	Part No.	Part Name	Remarks	ETRO	Q'ty	New
OTHERS PARTS GROUP							
	BKT1,2	nsp	BRACKET t1.0+Sn plating /PCB MTG		4010214876000S		
	BKT101	nsp	BRACKET SCREW		4010210196000S		
	CLAMP3	nsp	CLAMP WIRE(SOLDER)		4330000120000S		
	CN1	nsp	CN,WIRE 230MM/5P		L000231052050S		
	CN2	nsp	CN,WIRE 670MM/2P		L000671020050S		
	CN3	nsp	CN,WIRE 2MM 170MM/10P		L002171100050S		
	CX102	nsp	CN.WAFER 7.92MM		L108353280290S		
	CX105	nsp	CN,WIRE 370MM/5P		L000371050010S		
	CP1	nsp	CN.WAFER 3CKT		L108353280360S		
	CP12	nsp	CN.FPC 1.25MM 19P		L131019100010S		
⚠	F100	963652010510S	FUSE T2A/250V	U1B	N751502001160S		
⚠	F100	963652010500S	FUSE T1.6A/250V	N1B,N1SG	N751501601160S		
⚠	F101	963652010520S	FUSE T6.3A/250V	U1B	N751506301160S		⚠2
⚠	F101	963652010910S	FUSE T3.15A/250V	N1B,N1SG	N751503151160S		⚠2
	F100_1,100_2	nsp	HOLDER,FUSE CLIP		G645000050010S		
	F101_1,100_2	nsp	HOLDER,FUSE CLIP		G645000050010S		
	J44	nsp	CN,WIRE 1P		L045061000050S		
	J66	nsp	CN,WIRE 1P		L045061000050S		
	JACK1	963643010360S	6P JB-602A-02		G613602A0200YS		
	JACK2	963646001690S	8P SPEAKER TERMINAL		G614108V1010MS		
	JACK3	00D9630257208	TER,BOARD SCREW 4P		G612405E0200YS		
⚠	JK100	963641011240S	SOCKET,POWER AC		G4300152P0001S		
	L1-7	nsp	COIL INDUCTOR 0.5UH		D330R50000000S		
⚠	L100	963111010230S	COIL LINE FILTER LF-4ZB-E273H 27mH		D320402730020S		
⚠	RL101	963682010370S	RELAY HL31-1AT-5H 5V 1A		G680050102020S		
	RLY1	00D9630218409	RELAY BC3-12 24V 2A		G680240202030S		
	RLY2-7	963682002440S	RELAY 12V 5A SPK		G680120502050S		
	DZ1	00D9600095801	D,ZENER MTZJ6.8B		K06006R844520S		
	WIRE3	nsp	CN,WIRE 100MM/1P		L000101010120S		
	WIRE4	nsp	CN,WIRE 80MM/1P		L000800010090S		
	WIRE5	nsp	CN,WIRE 900MM/2P		L000901020050S		
⚠	T100	963102010240S	TRANS,SWITCHING ST-4430A		E060044300010S		
	TR100-102	00D9630255802	TR 2SC KTC3199Y		J5023199Y0010S		
		nsp	FUSE LABEL T1.6AL/250V	N1B,N1SG	5507000006790S		

PCB REG_CNT ASS'Y

	Ref. No.	Part No.	Part Name	Remarks	ETRO	Q'ty	New
SEMICONDUCTORS GROUP							
	IC103	00D2630553006	IC NJM7805FA		J126780500130S		
	IC104	00D2630554005	IC NJM7905FA		J126790500020S		
	IC105	00D2630553006	IC NJM7805FA		J126780500130S		
	IC106	00D2630810008	IC NJM7808FA		J126780800030S		
	IC107	00D2630503001	IC NJM7908FA		J126790800020S		
	IC108	963239010770S	IC NJM2388F09	N1G,N1SG	J126238800090S		
	IC108	963239003420S	IC NJM2388F05	U1B	J126238800050S		
	IC401	963239001880S	IC AZ4580M		J121458000020S		
	IC403	231310009508S	IC PQ033DNA1ZPH		J126033010010S		
	Q401,402	00D9630120704	TR KRA102S(PB)		J520010200210S		
	Q403,404	00D9630120801	TR 2SC KRC102S (NB)		J522010200210S		
	Q405	00D9630328302	TR KTC3875G		J5223875G0210S		
	Q406	00D9630120704	TR KRA102S(PB)		J520010200210S		
	D114	00D9630236504	D,SWITCHING AX-52		K120072140010S		
	D115,116	00D2760401905	D,SWITCHING 1SS133T		K000013300520S		
	D117,118	00D9630236504	D,SWITCHING AX-52		K120072140010S		
	D119-121	00D2760401905	D,SWITCHING 1SS133T		K000013300520S		
	D122	00D9630236504	D,SWITCHING AX-52		K120072140010S		
	D123	00D2760401905	D,SWITCHING 1SS133T		K000013300520S		
	D124-126	00D9630328409	D,SWITCHING 1N4007	N1G,N1SG	K000400700010S		
	D127-134	00D9630328409	D,SWITCHING 1N4007		K000400700010S		
	D137-144	00D9630328409	D,SWITCHING 1N4007		K000400700010S		
	D145	00D9630328409	D,SWITCHING 1N4007	N1G,N1SG	K000400700010S		
	D401,402	00D9630355401	D,SWITCHING KDS4148U		K005041480030S		
	ZD117,118	00D9600096004	D,ZENER MTZJ33B		K06033R044520S		
CAPACITORS GROUP							
	C126	00D9630217002	C,ELECT 3300UF-M/16V	N1G,N1SG	D040332083010S		
	C126	963134011290S	C,ELECT 4700UF-M/16V	U1B	D040472083020S		
	C127,128	00D9630234205	C,ELECT 10UF-M/50V		D040100087070S		
	C129	00D9630217002	C,ELECT 3300UF-M/16V		D040332083010S		
	C130	00D9630333203	C,ELECT 100UF-M/16V		D040101083090S		
	C131	00D9630234205	C,ELECT 10UF-M/50V		D040100087070S		
	C132	00D9630333203	C,ELECT 100UF-M/16V		D040101083090S		
	C133	90M-OA000500R	C,ELECT 4700UF-M/25V(MHA)		D040472084240S		
	C134	00D9630333203	C,ELECT 100UF-M/16V		D040101083090S		
	C135	90M-OA000500R	C,ELECT 4700UF-M/25V(MHA)		D040472084240S		
	C136	00D9630333203	C,ELECT 100UF-M/16V		D040101083090S		
	C137	00D9630234205	C,ELECT 10UF-M/50V		D040100087070S		
	C139,140	963134011280S	C,ELECT 470UF-M/25V	N1G,N1SG	D040471084060S		
	C142-144	nsp	C,FILM 0.1UF-J/50V		D020104167050S		
	C146-148	nsp	C,FILM 0.1UF-J/50V		D020104167050S		
	C401,402	nsp	C,CERAMIC 0.1UF-K/50V		D011104577160S		
	C405,406	00D9630234205	C,ELECT 10UF-M/50V		D040100087070S		
	C414	nsp	C,CERAMIC 1UF-K/16V		D011105173161S		
	C424	nsp	C,CERAMIC 1UF-K/16V		D011105173161S		

	Ref. No.	Part No.	Part Name	Remarks	ETRO	Q'ty	New
	C426	nsp	C,CERAMIC 0.1UF-K/50V		D011104577160S		
	C428-431	00D9630234205	C,ELECT 10UF-M/50V		D040100087070S		
	C436	nsp	C,CERAMIC 0.1UF-K/50V		D011104577160S		
	C437,438	nsp	C,CERAMIC 470PF-J/50V		D010471167160S		
	C441,442	nsp	C,CERAMIC 0.1UF-K/50V		D011104577160S		
	C445,446	nsp	C,CERAMIC 0.1UF-K/50V		D011104577160S		
	C470	nsp	C,CERAMIC 4.7UF-K/6.3V		D011475571160S		
OTHERS PARTS GROUP							
	BKT100	nsp	BRACKET SCREW		4010210196000S		
	CLAMP500-502	nsp	CLAMP WIRE(SOLDER)		4330000120000S		
	CN5	nsp	CN,WAFER 19P		L109012521910S		
	CN10	nsp	CN,WAFER 11P		L109012521110S		
	CN11	nsp	CN,WAFER 25P		L109012522510S		
	CN13	nsp	CN,WIRE 2MM 120MM/13P		L002121130010S		
	CN15	nsp	CN,WIRE 2MM 120MM/4P		L002121040110S		
	CN100	nsp	CN,WAFER 13P		L109012521310S		
	CN101	nsp	CN,WAFER 11P		L109012521110S		
	CN102	nsp	CN,WAFER 17P		L109012521710S		
	CN103	nsp	CN,WAFER 19P		L109012521910S		
	CN104	nsp	CN,WAFER 27P		L109012522710S		
	CN105	nsp	CN,WAFER 17P		L109012521710S		
	CN403	nsp	CN,WAFER 19P		L109012511910S		
	CP3	nsp	CN,WAFER 11P		L109012511110S		
	CP4	nsp	CN,WAFER 25P		L109012512510S		
	CP10	nsp	CN.WAFER 4P		L101200100420S		
	CP13A	nsp	CN.WAFER 13P		L101200101320S		
	CP100	nsp	CN,WAFER 13P		L109012511310S		
	CP101	nsp	CN,WAFER 11P		L109012511110S		
	CP102	nsp	CN.WAFER 4P		L102526700400S		
	CP104	nsp	CN.WAFER 3P		L102526700300S		
	CP105	nsp	CN,WAFER 19P		L109012511910S		
	CP106	nsp	CN,WAFER 17P		L109012511710S		
	CP108	nsp	CN,WAFER 19P		L109012511910S		
	CP110	nsp	CN.WAFER33P		L109012513310S		
⚠	F104	963652010500S	FUSE T1.6A/250V	N1G,N1SG	N751501601160S		
⚠	F105-108	963652010500S	FUSE T1.6A/250V		N751501601160S		
	F104A,104B	nsp	HOLDER,FUSE CLIP	N1G,N1SG	G645000050010S		
	F105A,105B	nsp	HOLDER,FUSE CLIP		G645000050010S		
	F106A,106B	nsp	HOLDER,FUSE CLIP		G645000050010S		
	F107A,107B	nsp	HOLDER,FUSE CLIP		G645000050010S		
	F108A,108B	nsp	HOLDER,FUSE CLIP		G645000050010S		
	JACK401	963643012080M	JACK,DIN DIN-901B(MXJACK)		G403901B0000YS		*
	JACK403	963646012090S	TER RCA 2PIN RCA-206B-02(OR,OR)		G601206B0200YS		*

PCB FRONT ASS'Y

	Ref. No.	Part No.	Part Name	Remarks	ETRO	Q'ty	New
SEMICONDUCTORS GROUP							
	IC301	963239001880S	IC AZ4580M		J121458000020S		
⚠	IC304	00D9600195808	IC ICP-N15		J120001500030S		
	IC305	963239001880S	IC AZ4580M		J121458000020S		
	Q300	00D9600133103	TR KSA916Y		J5000916Y0050S		
	Q301	00D9630120801	TR 2SC KRC102S (NB)		J522010200210S		
	Q302	00D9600285006	TR KRC104S (ND)		J522104S00210S		
	Q309,310	00D9630328302	TR KTC3875G		J5223875G0210S		
	Q313	00D9630120801	TR 2SC KRC102S (NB)		J522010200210S		
	Q317	00D9630120801	TR 2SC KRC102S (NB)		J522010200210S		
	Q318	00D9630120704	TR KRA102S(PB)		J520010200210S		
	Q319	00D9630120801	TR 2SC KRC102S (NB)		J522010200210S		
	D313-317	00D9630355401	D,SWITCHING KDS4148U		K005041480030S		
	D320	00D9630355401	D,SWITCHING KDS4148U		K005041480030S		
	D321,322	00D9630328409	D,SWITCHING 1N4007		K000400700010S		
	D333-335	963209003510S	D,ESD CDS3C05HDMI1		K067030500010S		
	ZD301	00D9600095801	D,ZENER MTZJ6.8B		K06006R844520S		
	ZD303	00D9630046202	D,ZENER MTZJ18B		K06018R044520S		
	ZD304	00D9630219903	D,ZENER MTZJ16B		K06016R044520S		
	ZD319-321	00D9600095500	D,ZENER MTZJ5.1B		K06005R144520S		
	LED300	963263012100S	LED BL-BVT201G 3PI RED/GREEN		K500032501130S		*
	LED301	963209006790M	LED BZ-BB43V4V-2-FP5-TBF22A 5PI BLUE		K500056000130S		
	LED302	963263012110S	LED BL-BUF4V5K-1-AV-FP3.5 3PI RED		K500032000160S		*
RESISTORS GROUP							
	R399	00D9639006272	R,FIXED RSD-R1-1WJ-4.7		N113135647920S		
CAPACITORS GROUP							
	C312	00D9630234205	C,ELECT 10UF-M/50V		D040100087070S		
	C314	00D9630293709	C,ELECT 100UF-M/10V		D040101082070S		
	C317	00D9630234205	C,ELECT 10UF-M/50V		D040100087070S		
	C319,320	nsp	C,FILM 0.1UF-J/100V		D02010406C060S		
	C321	nsp	C,CERAMIC 0.1UF-K/50V		D011104577160S		
	C322-324	nsp	C,CERAMIC 100PF-J/50V		D010101167160S		
	C325	nsp	C,CERAMIC 0.01UF-K/50V		D011103777162S		
	C328-330	nsp	C,CERAMIC 0.1UF-K/50V		D011104577160S		
	C331	nsp	C,CERAMIC 1UF-Z/50V		D011105597160S		
	C332-335	nsp	C,CERAMIC 0.1UF-K/50V		D011104577160S		
	C337	nsp	C,CERAMIC 0.1UF-K/50V		D011104577160S		
	C339,340	00D9630234205	C,ELECT 10UF-M/50V		D040100087070S		
	C341,342	00MOA10601620	C,ELECT 10UF-M/16V		D040100083050S		
	C346	nsp	C,CERAMIC 330PF-J/50V		D010331167160S		
	C347	nsp	C,CERAMIC 0.1UF-K/50V		D011104577160S		
	C350	nsp	C,CERAMIC 330PF-J/50V		D010331167160S		
	C352	00MOA10601620	C,ELECT 10UF-M/16V		D040100083050S		
	C355	nsp	C,CERAMIC 100PF-J/50V		D010101167160S		
	C359	00MOA10601620	C,ELECT 10UF-M/16V		D040100083050S		

	Ref. No.	Part No.	Part Name	Remarks	ETRO	Q'ty	New
	C361	00D9639006557	C,ELECT 220UF-M/6.3V		D040221081060S		
	C362	nsp	C,CERAMIC 0.1UF-K/50V		D011104577160S		
	C364	963134012120S	C,ELECT 100UF-M/63V		D040101088050S		*
	C365	nsp	C,CERAMIC 0.1UF-K/50V		D011104577160S		
	C366,367	00D9630293602	C,ELECT 1UF-M/50V (Pb Free)		D040010087150S		
	C368,369	nsp	C,CERAMIC 100PF-J/50V		D010101167160S		
	C370,371	nsp	C,CERAMIC 0.1UF-K/50V		D011104577160S		
	C372	00D9630234205	C,ELECT 10UF-M/50V		D040100087070S		
	C373	nsp	C,CERAMIC 0.1UF-K/50V		D011104577160S		
	C374	00D9630293602	C,ELECT 1UF-M/50V (Pb Free)		D040010087150S		
	C376	00D9630293602	C,ELECT 1UF-M/50V (Pb Free)		D040010087150S		
	C377	nsp	C,CERAMIC 100PF-J/50V		D010101167160S		
	C379	nsp	C,CERAMIC 0.1UF-K/50V		D011104577160S		
	C380	nsp	C,CERAMIC 1000PF-K/50V		D011102777160S		
	C384-387	nsp	C,CERAMIC 0.01UF-K/50V		D011103777162S		
	C388,389	nsp	C,CERAMIC 100PF-J/50V		D010101167160S		
OTHERS PARTS GROUP							
	BD300	nsp	COIL,BEAD BLM21PG221SN1		D340201212210S		
	BD301,302	nsp	COIL,BEAD BLM18AG121SN1D		D340160831211S		
	CN301	nsp	CN,WIRE 2MM 60MM/3P		L002600030090S		
	CN302	nsp	CN,WIRE 2MM 340MM/8P		L002341082630S		
	CN308	nsp	CN,WIRE 2MM 420MM/5P		L002421050020S		
	CP301	nsp	CN.WAFER 2.0MM DIP3P		L101200100310S		
	CP302	nsp	CN.WAFER 2.0MM DIP8P		L101200100810S		
	CP303	nsp	CN.WAFER 2.5MM 7P		L102526800700S		
	CP304	nsp	CN,PLUG CONTACT USB DIP4P		G480040100010S		
	CP305	nsp	CN.FPC 1.0MM 1.0-11S-40PW 40P		L130100114050S		
	JACK310	963643006910M	MINIJACK(PJ-3234A-4)SILVER RINNG		G401PJ323A40YS		
	JACK311	963643006900M	PHONE (YUQIU) D6.5 9P SILVER PJ-612A		G402PJ612AN0YS		
	JACK312	963643006470M	MINIJACK(PJ-3234A-3)SILVER RINNG		G401PJ323A30YS		
	RMC301	963262012130S	MODULE,REMOCON R34ES9A		E940349003610S		*
	SW301A-301C	00D9630045708	SW,TACT SKHV10920A		G180000270010S		
	SW302A-302C	00D9630045708	SW,TACT SKHV10920A		G180000270010S		
	SW303A-303C	00D9630045708	SW,TACT SKHV10920A		G180000270010S		
	SW304A-304C	00D9630045708	SW,TACT SKHV10920A		G180000270010S		
	SW305A	00D9630045708	SW,TACT SKHV10920A		G180000270010S		
	VEC302	00D9630122304	SW,ENCODER EC16B24SAABCZZZ		G121162400050S		
	VEC304	963667006880M	SW,ENCODER EC16B24T01B2-ZZZ		G121162401200S		
	FLT301	963172010470S	DISPLAY,FLT 18-ST-13GINK		K530180130010S		
	LUG301	nsp	RING,TER WIRE 180MM/1P		8410181010030S		
	LUG302	nsp	RING,TER WIRE 180,200MM/2P		8410201020030S		
		nsp	HOLDER FLT		4320200026000S		

PCB AUDIO_VIDEOASS'Y

	Ref. No.	Part No.	Part Name	Remarks	ETRO	Q'ty	New
SEMICONDUCTORS GROUP							
	IC801	235810045600S	IC R2A15220FP		J084152200010S		
	IC804	00D2623446900	IC TC4052BFT		J040405205510S		
	IC805	232810005504S	IC BD7628F-E2		J127762800010S		
	IC807,808	232810005504S	IC BD7628F-E2		J127762800010S		
	IC809	00D2623445901	IC TC4051BFT		J040405105510S		
	IC810	00D9630116307	IC LC74781-9013-E		J170747810010S		
	IC811	963239003470S	IC NJM2586AM		J171258600010S		
	IC812	00D2623447909	IC TC4053BFT TRIPLE		J040405301010S		
	Q801	00D2710318909	TR 2SA 2N5401S		J520254010010S		
	Q804	00D2730479909	TR 2SC 2N5551S		J522255510010S		
	Q807,808	00D9600196302	TR KTA1268BL		J5001268B0050S		
	Q812	00D2740160907	TR 2SD2144STPU		J5032144S0010S		
	Q813	00D9600196302	TR KTA1268BL		J5001268B0050S		
	Q821	00D9630044301	TR KTC2875B(MB)		J5222875B0010S		
	Q822,823	00D9630120704	TR KRA102S(PB)		J520010200210S		
	Q824,825	963219010760S	TR KRC231(NW)	N1G,N1SG	J5220231M0010S		
	Q826	00D9630120801	TR 2SC KRC102S (NB)	N1G,N1SG	J522010200210S		
	Q827	963219010740S	TR KRA111S	N1G,N1SG	J520011100210S		
	Q828	00D9630120801	TR 2SC KRC102S (NB)	N1G,N1SG	J522010200210S		
	Q829,830	00D9630120801	TR 2SC KRC102S (NB)		J522010200210S		
	Q831	963219010750S	TR 2SA KTA1504G		J5201504G0210S		
	Q832,833	00D9630328302	TR KTC3875G		J5223875G0210S		
	Q834	963219010750S	TR 2SA KTA1504G		J5201504G0210S		
	Q835	00D9600097508	TR RC KRC111M	N1G,N1SG	J6020111M0010S		
	Q836	00D2730459903	TR KTC2874B	N1G,N1SG	J502287400010S		
	Q837	00D9630120704	TR KRA102S(PB)	N1G,N1SG	J520010200210S		
	Q838	00D9630120801	TR 2SC KRC102S (NB)		J522010200210S		
	Q839	963219010750S	TR 2SA KTA1504G		J5201504G0210S		
	Q840	00D9630121606	TR KRC107S (NH)		J522107S00210S		
	Q842	00D9630120801	TR 2SC KRC102S (NB)		J522010200210S		
	D800,801	00D9630328409	D,SWITCHING 1N4007		K000400700010S		
	D806-819	00D2760401905	D,SWITCHING 1SS133T		K000013300520S		
	D826	00D9630328409	D,SWITCHING 1N4007		K000400700010S		
	D828,829	00D9630328409	D,SWITCHING 1N4007		K000400700010S		
	D830	00D9630355401	D,SWITCHING KDS4148U		K005041480030S		
	D838-843	00D9630355401	D,SWITCHING KDS4148U		K005041480030S		
	ZD800	00D2760760905	D,ZENER MTZJ3.6B-0.5W/5MA		K06003R644520S		
RESISTORS GROUP							
	R958	nsp	R,CHIP THICK 75-D,1/16W		C20007501M161S		
	R1010,1011	nsp	R,CHIP THICK 75-D,1/16W		C20007501M161S		
	R1015	nsp	R,CHIP THICK 75-D,1/16W		C20007501M161S		
	R1017	nsp	R,CHIP THICK 75-D,1/16W		C20007501M161S		
	R1037-1042	nsp	R,CHIP THICK 75-D,1/16W		C20007501M161S		
	R1052-1054	nsp	R,CHIP THICK 75-D,1/16W		C20007501M161S		

	Ref. No.	Part No.	Part Name	Remarks	ETRO	Q'ty	New
CAPACITORS GROUP							
	C800-807	00D9630234205	C,ELECT 10UF-M/50V		D040100087070S		
	C808	00D9630333203	C,ELECT 100UF-M/16V		D040101083090S		
	C809,810	00D9630234205	C,ELECT 10UF-M/50V		D040100087070S		
	C811	00D9630333203	C,ELECT 100UF-M/16V		D040101083090S		
	C812,813	nsp	C,CERAMIC 330PF-J/50V		D010331167160S		
	C826	nsp	C,CERAMIC 330PF-J/50V		D010331167160S		
	C828	00D9630293709	C,ELECT 100UF-M/10V		D040101082070S		
	C829	nsp	C,CERAMIC 330PF-J/50V		D010331167160S		
	C830	00D9630293709	C,ELECT 100UF-M/10V		D040101082070S		
	C831	00D9630234205	C,ELECT 10UF-M/50V		D040100087070S		
	C832	00D9630293709	C,ELECT 100UF-M/10V		D040101082070S		
	C833	00D9630234205	C,ELECT 10UF-M/50V		D040100087070S		
	C834	nsp	C,CERAMIC 330PF-J/50V		D010331167160S		
	C835,836	00D9630293709	C,ELECT 100UF-M/10V		D040101082070S		
	C837	nsp	C,CERAMIC 330PF-J/50V		D010331167160S		
	C838,839	00D9630293709	C,ELECT 100UF-M/10V		D040101082070S		
	C840	00D9630234205	C,ELECT 10UF-M/50V		D040100087070S		
	C841	00D9609010010	C,ELECT 4.7UF-M/50V		D0404R7087250S		
	C842	nsp	C,CERAMIC 330PF-J/50V		D010331167160S		
	C843	nsp	C,CERAMIC 0.01UF-K/50V		D010103777160S		
	C844,845	00D9630234205	C,ELECT 10UF-M/50V		D040100087070S		
	C846	00D9630293709	C,ELECT 100UF-M/10V		D040101082070S		
	C847	nsp	C,CERAMIC 330PF-J/50V		D010331167160S		
	C848	00D9630294106	C,ELECT 2.2UF-M/50V (Pb Free)		D0402R2087160S		
	C849	nsp	C,CERAMIC 0.01UF-K/50V		D010103777160S		
	C854	nsp	C,CERAMIC 330PF-J/50V		D010331167160S		
	C856	nsp	C,CERAMIC 330PF-J/50V		D010331167160S		
	C862-864	nsp	C,CERAMIC 0.01UF-K/50V		D010103777160S		
	C867	nsp	C,CERAMIC 0.01UF-K/50V		D010103777160S		
	C868,869	00D9630224503	C,ELECT 22UF-M/50V		D040220087060S		
	C870	nsp	C,CERAMIC 100PF-J/50V		D010101167160S		
	C871	00D9609010023	C,ELECT 0.47UF-M/50V		D040R47087050S		
	C872	00D9630234205	C,ELECT 10UF-M/50V		D040100087070S		
	C875	00D9630234205	C,ELECT 10UF-M/50V		D040100087070S		
	C876-880	nsp	C,CERAMIC 100PF-J/50V	U1B	D010101167160S		
	C881	nsp	C,CERAMIC 0.1UF-K/50V	U1B	D011104577160S		
	C882	nsp	C,CERAMIC 100PF-J/50V	N1G,N1SG	D010101167160S		
	C883	00D9630234205	C,ELECT 10UF-M/50V	N1G,N1SG	D040100087070S		
	C884	nsp	C,CERAMIC 100PF-J/50V	N1G,N1SG	D010101167160S		
	C885	nsp	C,CERAMIC 0.047UF-Z/50V	N1G,N1SG	D011473597160S		
	C886-889	nsp	C,CERAMIC 100PF-J/50V	N1G,N1SG	D010101167160S		
	C903,904	00D9639005862	C,ELECT 47UF-M/16V		D040470083080S		
	C905,906	nsp	C,CERAMIC 0.01UF-K/50V		D010103777160S		
	C907	nsp	C,CERAMIC 0.047UF-Z/50V		D011473597160S		
	C909	nsp	C,CERAMIC 0.047UF-Z/50V		D011473597160S		
	C910	nsp	C,CERAMIC 0.1UF-K/50V		D011104577160S		
	C911	00D9630293602	C,ELECT 1UF-M/50V (Pb Free)		D040010087150S		
	C912	nsp	C,CERAMIC 0.01UF-K/50V		D010103777160S		
	C913	nsp	C,CERAMIC 0.047UF-Z/50V		D011473597160S		
	C914,915	00D9639005862	C,ELECT 47UF-M/16V		D040470083080S		

	Ref. No.	Part No.	Part Name	Remarks	ETRO	Q'ty	New
	C919	nsp	C,CERAMIC 0.01UF-K/50V		D010103777160S		
	C920	00D9630293709	C,ELECT 100UF-M/10V		D040101082070S		
	C921	00D9630333203	C,ELECT 100UF-M/16V		D040101083090S		
	C922	00D9630234205	C,ELECT 10UF-M/50V		D040100087070S		
	C923	00D9630224503	C,ELECT 22UF-M/50V		D040220087060S		
	C924	00D9630333203	C,ELECT 100UF-M/16V		D040101083090S		
	C925	nsp	C,CERAMIC 0.01UF-K/50V		D010103777160S		
	C927	nsp	C,CERAMIC HIK X7R1200PF-K/50V		D011122777160S		
	C928	00D9630293602	C,ELECT 1UF-M/50V (Pb Free)		D040010087150S		
	C929	nsp	C,CERAMIC 0.01UF-K/50V		D010103777160S		
	C930	00D9630224503	C,ELECT 22UF-M/50V		D040220087060S		
	C931,932	nsp	C,CERAMIC 0.01UF-K/50V		D010103777160S		
	C933	00D9630293602	C,ELECT 1UF-M/50V (Pb Free)		D040010087150S		
	C934	00D9630293709	C,ELECT 100UF-M/10V		D040101082070S		
	C935,936	nsp	C,CERAMIC 0.01UF-K/50V		D010103777160S		
	C937	00D9639005862	C,ELECT 47UF-M/16V		D040470083080S		
	C938,939	nsp	C,CERAMIC COG24PF-J/50V		D010240167160S		
	C940	nsp	C,CERAMIC 0.022UF-Z/50V		D011223597160S		
	C941	nsp	C,CERAMIC 0.01UF-K/50V		D010103777160S		
	C942,943	nsp	C,CERAMIC 20PF-J/50V		D010200167160S		
	C944	00D9630293709	C,ELECT 100UF-M/10V		D040101082070S		
	C945-948	nsp	C,CERAMIC COG68PF-J/50V		D010680167160S		
	C949,950	nsp	C,CERAMIC 0.1UF-K/50V		D011104577160S		
	C951,952	nsp	C,CERAMIC COG68PF-J/50V		D010680167160S		
	C953-955	00D9630293602	C,ELECT 1UF-M/50V (Pb Free)		D040010087150S		
	C956,957	nsp	C,CERAMIC 0.1UF-K/50V		D011104577160S		
	C958	00D9630293709	C,ELECT 100UF-M/10V		D040101082070S		
	C959	00D9630293602	C,ELECT 1UF-M/50V (Pb Free)		D040010087150S		
	C960	nsp	C,CERAMIC 0.047UF-Z/50V		D011473597160S		
	C961,962	00D9630293602	C,ELECT 1UF-M/50V (Pb Free)		D040010087150S		
	C963	nsp	C,CERAMIC 0.047UF-Z/50V		D011473597160S		
	C964	nsp	C,CERAMIC 0.01UF-K/50V		D010103777160S		
	C965	00D9630293602	C,ELECT 1UF-M/50V (Pb Free)		D040010087150S		
	C966	nsp	C,CERAMIC 0.047UF-Z/50V		D011473597160S		
	C967	nsp	C,CERAMIC 220PF-J/50V		D010221167160S		
	C968	00D9630293602	C,ELECT 1UF-M/50V (Pb Free)		D040010087150S		
	C969,970	00D9630294203	C,ELECT 33UF-M/16V		D040330083050S		
	C971	00D9630293602	C,ELECT 1UF-M/50V (Pb Free)		D040010087150S		
	C972,973	nsp	C,CERAMIC 0.01UF-K/50V		D010103777160S		
	C974	00D9630293602	C,ELECT 1UF-M/50V (Pb Free)		D040010087150S		
	C1109	nsp	C,FILM 0.0082UF	N1G,N1SG	D02082206C060S		
	C1110,1111	nsp	C,FILM 0.0047UF	N1G,N1SG	D02047206C060S		
	C1112	nsp	C,FILM 0.0082UF	N1G,N1SG	D02082206C060S		
OTHERS PARTS GROUP							
	BD800,801	963115003230S	COIL,BEAD CBW160808U121T		D340160811210S		
	CN2	nsp	CN.FPC 19P		L131019000010S		
	CN4	nsp	CN,WAFER 19P		L109012511910S		
	CN5	nsp	CN,WAFER 17P		L109012511710S		
	CN401	nsp	CN,WIRE 2MM 290MM/13P		L002291132620S		

	Ref. No.	Part No.	Part Name	Remarks	ETRO	Q'ty	New
	CP5	nsp	CN,WAFER 11P		L109012511110S		
	CP8	nsp	CN,WAFER 25P		L109012512510S		
	CP10	nsp	CN,WAFER 17P		L109012511710S		
	CP11	nsp	CN,WAFER 27P		L109012512710S		
	CP800	963183012380S	TUNER,FM/AM KST-MW004MV1-S63SV	U1B	E903004100031S		
	CP801	963183011320S	TUNER,FM/AM KST-MT104MV1-2	N1B,N1SG	E903104100110S		
	G101	nsp	CN,WIRE 80MM/1P		L000800010090S		
	JK101	963643010330S	TER,RCA 6PIN		G603615A0700YS		
	JK102	963643010320S	TER,RCA 6PIN		G603615A0207YS		
	JK103	00D9630146005	TER,RCA 1PIN		G600107A0000YS		
	JK104	963643010350S	TER,RCA 3PIN		G606305B1400YS		
	JK105	963643005090S	TERMINAL RCA 1PIN		G600107AY000YS		
	JK106-109	963643010340S	TER,RCA 3PIN		G606305B0200YS		
	L801	nsp	COIL INDUCTOR 33UH		D330330700520S		
	L1000,1001	nsp	FILTER,LC MPX	N1B,N1SG	E401010020020S		
	X800	00D9630217400	CRYSTAL 14.31818MHZ		E80014R318080S		
	X801	963141012140M	CRYSTAL 17.734476MHZ	N1B,N1SG	E80017R734410S		*
		nsp	BRACKET t1.0+Sn plating /PCB MTG		4010214876000S		

PCB HDMI ASS'Y

	Ref. No.	Part No.	Part Name	Remarks		Q'ty	New
SEMICONDUCTORS GROUP							
	U1001	nsp	IC ADV7840		J040784005510S		
	U1501	963239010410S	IC ADV7511BSTZ-225		J040751100010S		
	U1703	00D2623077900	IC TC74VHCU04FT		J040740405580S		
	U1706	236810062608S	IC LC89058W-E		J046890580020S		
	U1707	963243010640S	IC PAL/PLD (EPM3032A-TC44)		8952161100040		
	U1901	nsp	IC ADSP21367KSWZ2A1181		J080213675520S		
	U1902	963239010680S	IC MEMORY-RAM (W9864G2IH-6)		J001986460060S		*
	U1903	963248012190M	IC EN29LV160BB-70TIP		8952160100030		
	U2101	236810086505S	IC AK5358BET-E2		8952160100040		
	U2102	236810073509S	IC AK4358VQ-L		J042435800010S		
	U2103-2106	963239001880S	IC AZ4580M		J121458000020S		
	U2301	963248012200M	IC MEMORY FLASH (EN29LV160BT-70TIP)		8952160100040		*
	U2302	963239010380S	IC IS42S16400F-6TL		J001421640060S		
	U2303	nsp	IC MFI341S2164		J044341216410S		
	U2304	963239008830S	IC TCC8600 32BIT		J085860000010S		
	U2305	236810070500S	IC AK4424ET-E2 TSSOP16		J042442405520S		
	U2306	00D2790055907	SW,POLY MICROSMD175F		G300017500010S		
	U2501-2503	nsp	IC EX3AV		J048030030010S		
	U2504,2505	231310009508S	IC PQ033DNA1ZPH		J126033010010S		⚠3
	U2506	234810015507S	IC BU4248F		J126424800010S		
	U2901	00MHC007805KZ	IC TC74VHCT125AFT		J040741255580S		
	U2902	234810014504S	IC MC14094BDTR2G		J040140940020S		
	U2903	00D2623437906	IC TC74VHCT244AFT		J040742445540S		
	U2905	00D2623444902	IC TC74VHC08FT	N1G,N1SG	J040740800280S		
	U3101	963262012150M	MODULE REMOCON R94EV1A		E940941003610S		*
	U3102	963243012170M	IC CPU (R5F64169DFD)		8952160100010		*
	U3103	246810026500S	IC R1EX24256ASAS0A		J000242565550S		
	U3301	963243012180M	IC CPU (R5F3650KNFB)		8952160100020		*
	Q1001	00D9630120801	TR 2SC KRC102S (NB)		J522010200210S		
	Q1002	00D9600285006	TR KRC104S (ND)		J522104S00210S		
	Q1003	00D9630120801	TR 2SC KRC102S (NB)		J522010200210S		
	Q1004	00D9600285006	TR KRC104S (ND)		J522104S00210S		
	Q1005	00D9630120801	TR 2SC KRC102S (NB)		J522010200210S		
	Q1006	00D9600285006	TR KRC104S (ND)		J522104S00210S		
	Q1007	00D9630120801	TR 2SC KRC102S (NB)		J522010200210S		
	Q1008,1009	00D9600285006	TR KRC104S (ND)		J522104S00210S		
	Q1302	00D2750110905	SEMI HN1K02FU		J543102000020S		
	Q1501	00D9630120704	TR KRA102S(PB)		J520010200210S		
	Q1502	00D9630120801	TR 2SC KRC102S (NB)		J522010200210S		
	Q1901	00D9630120801	TR 2SC KRC102S (NB)		J522010200210S		
	Q1902	00D9630120704	TR KRA102S(PB)		J520010200210S		
	Q2302,2303	00D9630120801	TR 2SC KRC102S (NB)		J522010200210S		
	Q2304	963219004200S	CHIP FDC608PZ P-CH		J543608000010S		
	Q2305	00D9630120704	TR KRA102S(PB)		J520010200210S		
	Q2507-2514	00D9630121402	TR KRA104S		J520010400210S		
	Q2515-2522	963219004200S	CHIP FDC608PZ P-CH		J543608000010S		
	Q2523,2524	00D2710326904	TR 2SA 2SA1954		J520195405510S		
	Q2525	963209011260S	D,SWITCHING DAN202U		K005020200200S		

NOTE :
When update Firmware, please confirm a last version in SDI.
Use the service board after updating it.

	Ref. No.	Part No.	Part Name	Remarks		Q'ty	New
	Q2526,2527	00D2710326904	TR 2SA 2SA1954		J5201954055105		
	Q2528,2529	00D9630120801	TR 2SC KRC102S (NB)		J5220102002105		
	Q2531,2532	00D9630120801	TR 2SC KRC102S (NB)		J5220102002105		
	Q2533	00D9630328302	TR KTC3875G		J5223875G0210S		
	Q2536	00D9630120801	TR 2SC KRC102S (NB)		J5220102002105		
	Q2537	00D9600285006	TR KRC104S (ND)		J5221045002105		
	Q2540	00D9630120801	TR 2SC KRC102S (NB)		J5220102002105		
	Q2541	00D9600285006	TR KRC104S (ND)		J5221045002105		
	Q2542	00D9630120801	TR 2SC KRC102S (NB)		J5220102002105		
	Q2543	00D9600285006	TR KRC104S (ND)		J5221045002105		
	Q2549	00D9630120801	TR 2SC KRC102S (NB)		J5220102002105		
	Q2550	00D9600285006	TR KRC104S (ND)		J5221045002105		
	Q2901	00D9630120801	TR 2SC KRC102S (NB)		J5220102002105		
	Q2902	963219010750S	TR 2SA KTA1504G		J5201504G0210S		
	Q2903,2904	00D9630328302	TR KTC3875G		J5223875G0210S		
	Q2905	963219010750S	TR 2SA KTA1504G		J5201504G0210S		
	Q2906-2910	00D9630328302	TR KTC3875G		J5223875G0210S		
	Q3101	00D9630120801	TR 2SC KRC102S (NB)		J5220102002105		
	Q3104	00D9630120704	TR KRA102S(PB)		J5200102002105		
	Q3105	00D9630120801	TR 2SC KRC102S (NB)		J5220102002105		
	Q3106-3109	00D9630121402	TR KRA104S		J5200104002105		
	Q3110	00D9630120801	TR 2SC KRC102S (NB)		J5220102002105		
	Q3301	00D9630328302	TR KTC3875G		J5223875G0210S		
	Q3302	00D9630120704	TR KRA102S(PB)		J5200102002105		
	Q3303	963219002180S	TR 2SD2114KT146W		J5232114K0010S		
	Q3304	00D9630120801	TR 2SC KRC102S (NB)		J5220102002105		
	Q3305	00D9630328302	TR KTC3875G		J5223875G0210S		
	Q3306	00D9630120801	TR 2SC KRC102S (NB)		J5220102002105		
	D2501	00D9630355401	D,SWITCHING KDS4148U		K0050414800305		
	D2502	00D9630328603	D,SCHOTTKY RB521S-30		K1255213000105		
	D3105	00D9630355401	D,SWITCHING KDS4148U		K0050414800305		
	D3106	90M-HI200030R	LED,IR SIR-34ST3F 3PI 2.5MM		K5053430000105		
	D3112	00D9630355401	D,SWITCHING KDS4148U		K0050414800305		
	D3301	00D9630355401	D,SWITCHING KDS4148U		K0050414800305		
RESISTORS GROUP							
	R2906	nsp	R,CHIP THICK 33-J,1/16W	N1B, N1SG	C20003306M101S		
	R2908,2909	nsp	R,CHIP THICK 33-J,1/16W	N1B, N1SG	C20003306M101S		
	R2938	nsp	R,CHIP THICK 470K-J,1/16W	N1B, N1SG	C20004746M101S		
	R3119	nsp	R,CHIP THICK 10K-J,1/16W	U1B	C20001036M160S		
	R3122	nsp	R,CHIP THICK 10K-J,1/16W	N1B, N1SG	C20001036M160S		
CAPACITORS GROUP							
	C1001-1007	nsp	C,CERAMIC 0.1UF-K/50V		D0111041771015		
	C1008	nsp	C,CERAMIC 0.01UF-K/25V		D0111037741025		
	C1009-1012	nsp	C,CERAMIC 0.1UF-K/50V		D0111041771015		
	C1013,1014	nsp	C,CERAMIC 12PF-J/50V		D0111201671015		
	C1015,1016	nsp	C,CERAMIC 15PF-J/50V		D0111501671015		
	C1017	nsp	C,CERAMIC 0.1UF-K/50V		D0111041771015		

	Ref. No.	Part No.	Part Name	Remarks		Q'ty	New
	C1018	nsp	C,CERAMIC 1000PF-K/50V		D011102177101S		
	C1019	nsp	C,CERAMIC 4.7UF-K/6.3V		D011475571160S		
	C1022-1029	nsp	C,CERAMIC 0.1UF-K/50V		D011104177101S		
	C1037	nsp	C,CERAMIC 4.7UF-K/6.3V		D011475571160S		
	C1039,1040	nsp	C,CERAMIC 0.1UF-K/50V		D011104177101S		
	C1041	nsp	C,CERAMIC 4.7UF-K/6.3V		D011475571160S		
	C1042	nsp	C,CERAMIC 0.1UF-K/50V		D011104177101S		
	C1044,1045	nsp	C,CERAMIC 0.1UF-K/50V		D011104177101S		
	C1047	nsp	C,CERAMIC 0.1UF-K/50V		D011104177101S		
	C1055,1056	nsp	C,CERAMIC 10UF-K/16V		D011106573200S		
	C1057	nsp	C,CERAMIC 0.1UF-K/50V		D011104177101S		
	C1058	nsp	C,CERAMIC 10UF-K/16V		D011106573200S		
	C1059	nsp	C,CERAMIC 0.1UF-K/50V		D011104177101S		
	C1060	nsp	C,CERAMIC 10UF-K/16V		D011106573200S		
	C1061	nsp	C,CERAMIC 0.1UF-K/50V		D011104177101S		
	C1063	nsp	C,CERAMIC 4.7UF-K/6.3V		D011475571160S		
	C1066-1070	nsp	C,CERAMIC 0.1UF-K/50V		D011104177101S		
	C1073	nsp	C,CERAMIC 4.7UF-K/6.3V		D011475571160S		
	C1075-1077	nsp	C,CERAMIC 0.1UF-K/50V		D011104177101S		
	C1078	nsp	C,CERAMIC 4.7UF-K/6.3V		D011475571160S		
	C1079	nsp	C,CERAMIC 0.1UF-K/50V		D011104177101S		
	C1081,1082	nsp	C,CERAMIC 0.1UF-K/50V		D011104177101S		
	C1083	nsp	C,CERAMIC 0.082UF-K/16V		D011823773161S		
	C1084	nsp	C,CERAMIC 0.01UF-K/50V		D011103777160S		
	C1085	nsp	C,CERAMIC 0.82UF-K/10V		D011824772162S		
	C1086	nsp	C,CERAMIC X7R0.039UF-K/50V		D011393707160S		
	C1087	nsp	C,CERAMIC 0.01UF-K/25V		D011103774102S		
	C1088,1089	nsp	C,CERAMIC 0.1UF-K/50V		D011104177101S		
	C1090	nsp	C,CERAMIC 10UF-K/16V		D011106573200S		
	C1091-1093	nsp	C,CERAMIC 0.1UF-K/50V		D011104177101S		
	C1094	nsp	C,CERAMIC 0.01UF-K/25V		D011103774102S		
	C1095	nsp	C,CERAMIC 0.1UF-K/50V		D011104177101S		
	C1102,1103	nsp	C,CERAMIC 0.1UF-K/50V		D011104177101S		
	C1105	nsp	C,CERAMIC 0.1UF-K/50V		D011104177101S		
	C1107	nsp	C,CERAMIC 0.1UF-K/50V		D011104177101S		
	C1109	nsp	C,CERAMIC 0.1UF-K/50V		D011104177101S		
	C1122	nsp	C,CERAMIC 4.7UF-K/6.3V		D011475571160S		
	C1124	nsp	C,CERAMIC 4.7UF-K/6.3V		D011475571160S		
	C1125	nsp	C,CERAMIC 0.1UF-K/50V		D011104177101S		
	C1127-1130	nsp	C,CERAMIC 0.1UF-K/50V		D011104177101S		
	C1501	nsp	C,CERAMIC 0.1UF-K/50V		D011104177101S		
	C1502	nsp	C,CERAMIC 10UF-K/16V		D011106573200S		
	C1505-1508	nsp	C,CERAMIC 0.1UF-K/50V		D011104177101S		
	C1509	nsp	C,CERAMIC 10UF-K/16V		D011106573200S		
	C1512-1515	nsp	C,CERAMIC 0.1UF-K/50V		D011104177101S		
	C1516	nsp	C,CERAMIC 4.7UF-K/6.3V		D011475571160S		
	C1519,1520	nsp	C,CERAMIC 0.1UF-K/50V		D011104177101S		
	C1521	nsp	C,CERAMIC 10UF-K/16V		D011106573200S		
	C1524-1526	nsp	C,CERAMIC 1UF-K/10V		D011105772161S		
	C1701-1703	nsp	C,CERAMIC 0.1UF-K/50V		D011104177101S		
	C1706,1707	nsp	C,CERAMIC 0.01UF-K/25V		D011103774102S		
	C1708	nsp	C,CERAMIC 4.7UF-K/6.3V		D011475571160S		

	Ref. No.	Part No.	Part Name	Remarks		Q'ty	New
	C1709-1713	nsp	C,CERAMIC 0.1UF-K/50V		D011104177101S		
	C1714,1715	nsp	C,CERAMIC 10PF-D/50V		D011100117101S		
	C1716,1717	nsp	C,CERAMIC 0.1UF-K/50V		D011104177101S		
	C1718	nsp	C,CERAMIC 4.7UF-K/6.3V		D011475571160S		
	C1720	nsp	C,CERAMIC 1000PF-K/50V		D011102177101S		
	C1721	nsp	C,CERAMIC 0.1UF-K/50V		D011104177101S		
	C1722	nsp	C,CERAMIC 0.022UF-K/25V		D011223777160S		
	C1723-1728	nsp	C,CERAMIC 0.1UF-K/50V		D011104177101S		
	C1901-1910	nsp	C,CERAMIC 0.1UF-K/50V		D011104177101S		
	C1919-1941	nsp	C,CERAMIC 0.1UF-K/50V		D011104177101S		
	C1942	nsp	C,CERAMIC 4.7UF-K/6.3V		D011475571160S		
	C1943	nsp	C,CERAMIC 0.1UF-K/50V		D011104177101S		
	C1944	nsp	C,CERAMIC 4.7UF-K/6.3V		D011475571160S		
	C1945	nsp	C,CERAMIC 0.1UF-K/50V		D011104177101S		
	C1948-1953	nsp	C,CERAMIC 0.1UF-K/50V		D011104177101S		
	C1954	nsp	C,CERAMIC 4.7UF-K/6.3V		D011475571160S		
	C1955-1960	nsp	C,CERAMIC 0.1UF-K/50V		D011104177101S		
	C1961-1963	nsp	C,CERAMIC 4.7UF-K/6.3V		D011475571160S		
	C1965	nsp	C,CERAMIC 0.1UF-K/50V		D011104177101S		
	C1966,1967	nsp	C,CERAMIC 7PF-C/50V		D011070117101S		
	C1968-1981	nsp	C,CERAMIC 0.1UF-K/50V		D011104177101S		
	C2101	nsp	C,CERAMIC 4.7UF-K/6.3V		D011475571160S		
	C2103	nsp	C,CERAMIC 1UF-K/10V		D011105772161S		
	C2105	nsp	C,CERAMIC 4.7UF-K/6.3V		D011475571160S		
	C2106	nsp	C,CERAMIC 1UF-K/10V		D011105772161S		
	C2107,2108	nsp	C,CERAMIC 0.1UF-K/50V		D011104177101S		
	C2109-2128	nsp	C,CERAMIC 1000PF-K/50V		D011102177101S		
	C2129,2130	00D9630338606	C,ELECT 10UF-MVG/16V		D050100083470S		
	C2131	nsp	C,CERAMIC 0.1UF-K/50V		D011104177101S		
	C2132,2133	nsp	C,CERAMIC 0.01UF-K/50V		D011103777160S		
	C2135	nsp	C,CERAMIC 4.7UF-K/6.3V		D011475571160S		
	C2136	963134000450S	C,ELECT 100UF-MVG/16V		D050101083660S		
	C2137,2138	nsp	C,CERAMIC X7R3900PF-K/50V		D011392777160S		
	C2139	nsp	C,CERAMIC X7R2700PF-K/50V		D011272777160S		
	C2140-2142	nsp	C,CERAMIC X7R3900PF-K/50V		D011392777160S		
	C2143,2144	nsp	C,CERAMIC X7R2700PF-K/50V		D011272777160S		
	C2145-2160	nsp	C,CERAMIC 470PF-J/50V		D010471167160S		
	C2161,2162	963134000450S	C,ELECT 100UF-MVG/16V		D050101083660S		
	C2302	nsp	C,CERAMIC 1000PF-K/50V		D011102177101S		
	C2303-2311	nsp	C,CERAMIC 0.1UF-K/50V		D011104177101S		
	C2312	nsp	C,CERAMIC 1000PF-K/50V		D011102177101S		
	C2313	nsp	C,CERAMIC 0.1UF-K/50V		D011104177101S		
	C2315	nsp	C,CERAMIC 4.7UF-K/6.3V		D011475571160S		
	C2321-2323	nsp	C,CERAMIC 0.1UF-K/50V		D011104177101S		
	C2328	nsp	C,CERAMIC 1000PF-K/50V		D011102177101S		
	C2329	nsp	C,CERAMIC 100PF-J/50V		D011101167101S		
	C2330-2334	nsp	C,CERAMIC 0.1UF-K/50V		D011104177101S		
	C2335	nsp	C,CERAMIC 1000PF-K/50V		D011102177101S		
	C2336	nsp	C,CERAMIC 390PF-K/50V		D011391177101S		
	C2337-2339	nsp	C,CERAMIC 0.1UF-K/50V		D011104177101S		
	C2340	nsp	C,CERAMIC 1200PF-K/50V		D011122177101S		
	C2341-2343	nsp	C,CERAMIC 0.1UF-K/50V		D011104177101S		

	Ref. No.	Part No.	Part Name	Remarks		Q'ty	New
	C2344	nsp	C,CERAMIC 4.7UF-K/6.3V		D011475571160S		
	C2348-2350	nsp	C,CERAMIC 0.1UF-K/50V		D011104177101S		
	C2354,2355	nsp	C,CERAMIC 18PF-J/50V		D011180167101S		
	C2356	nsp	C,CERAMIC 1UF-K/10V		D011105772161S		
	C2358	nsp	C,CERAMIC 0.1UF-K/50V		D011104177101S		
	C2359	nsp	C,CERAMIC 1UF-K/10V		D011105772161S		
	C2360-2363	nsp	C,CERAMIC 4.7UF-K/6.3V		D011475571160S		
	C2364,2365	nsp	C,CERAMIC 2200PF-K/50V		D011222777160S		
	C2366	nsp	C,CERAMIC 0.1UF-K/50V		D011104177101S		
	C2369,2370	nsp	C,CERAMIC 100PF-J/50V		D011101167101S		
	C2501-2503	nsp	C,CERAMIC 0.1UF-K/50V		D011104177101S		
	C2513-2515	nsp	C,CERAMIC 10UF-K/16V		D011106573200S		
	C2516-2518	nsp	C,CERAMIC 0.01UF-K/25V		D011103774102S		
	C2519-2521	nsp	C,CERAMIC 0.1UF-K/50V		D011104177101S		
	C2522-2527	nsp	C,CERAMIC 10UF-K/16V		D011106573200S		
	C2528-2530	nsp	C,CERAMIC 15PF-J/50V		D011150167101S		
	C2537-2544	nsp	C,CERAMIC 0.01UF-K/25V		D011103774102S		
	C2545-2552	nsp	C,CERAMIC 0.1UF-K/50V		D011104177101S		
	C2553-2556	nsp	C,CERAMIC 1UF-K/10V		D011105772161S		
	C2559	nsp	C,CERAMIC X7R0.015UF-K/50V		D011153777160S		
	C2560	00D9630325402	C,ELECT 470UF-MVG/6.3V		D050471081200S		
	C2561,2562	nsp	C,CERAMIC 0.1UF-K/50V		D011104177101S		
	C2564	nsp	C,CERAMIC 1UF-K/10V		D011105772161S		
	C2565,2566	nsp	C,CERAMIC 0.1UF-K/50V		D011104177101S		
	C2569	nsp	C,CERAMIC 0.1UF-K/50V		D011104177101S		
	C2572	nsp	C,CERAMIC 1000PF-K/50V		D011102177101S		
	C2715-2724	nsp	C,CERAMIC 0.1UF-K/50V		D011104177101S		
	C2725	nsp	C,CERAMIC 470PF-K/50V		D011471177101S		
	C2726	nsp	C,CERAMIC 0.1UF-K/50V		D011104177101S		
	C2727	nsp	C,CERAMIC 470PF-K/50V		D011471177101S		
	C2728	nsp	C,CERAMIC 0.1UF-K/50V		D011104177101S		
	C2729,2730	nsp	C,CERAMIC 470PF-K/50V		D011471177101S		
	C2901-2903	nsp	C,CERAMIC 0.1UF-K/50V		D011104177101S		
	C2907	nsp	R,CHIP 100K-J,1/16W	N1G,N1SG	C20001046M101S		
	C2908	nsp	C,CERAMIC 0.1UF-K/50V		D011104177101S		
	C2909	nsp	C,CERAMIC 0.01UF-K/25V		D011103774102S		
	C2910	nsp	C,CERAMIC 0.1UF-K/50V		D011104177101S		
	C2911-2914	nsp	C,CERAMIC 0.01UF-K/25V		D011103774102S		
	C3107	nsp	C,CERAMIC 4.7UF-K/6.3V		D011475571160S		
	C3109	nsp	C,CERAMIC 4.7UF-K/6.3V		D011475571160S		
	C3111-3113	nsp	C,CERAMIC 0.1UF-K/50V		D011104177101S		
	C3114	nsp	C,CERAMIC 4.7UF-K/6.3V		D011475571160S		
	C3120	nsp	C,CERAMIC 4.7UF-K/6.3V		D011475571160S		
	C3121	nsp	C,CERAMIC 0.1UF-K/50V		D011104177101S		
	C3122,3123	nsp	C,CERAMIC 10PF-D/50V		D011100117101S		
	C3124-3128	nsp	C,CERAMIC 0.1UF-K/50V		D011104177101S		
	C3301,3302	nsp	C,CERAMIC 0.1UF-K/50V		D011104177101S		
	C3303,3304	nsp	C,CERAMIC T.C COG10PF-D/50V		D010100117160S		
	C3305,3306	nsp	C,CERAMIC 0.1UF-K/50V		D011104177101S		
	C3307	nsp	C,CERAMIC 4.7UF-K/6.3V		D011475571160S		
	C3315	nsp	C,CERAMIC 0.1UF-K/50V		D011104177101S		
	C3316	nsp	C,CERAMIC 220PF-K/50V		D011221177101S		

	Ref. No.	Part No.	Part Name	Remarks		Q'ty	New	
	C3317	nsp	C,CERAMIC 0.1UF-K/50V		D011104177101S			
	C9151-9155	nsp	C,CERAMIC 1000PF-K/50V		D011102177101S			
OTHERS PARTS GROUP								
	L1001	963115003230S	COIL,BEAD CBW160808U121T		D340160811210S			
	L1003	nsp	R,CHIP 0-J,1/10W		C200000060201S			
	L1501-1503	nsp	COIL,CHIP FLC32C220K		D307322205520S			
	L2301-2303	nsp	COIL,BEAD BLM21PG221SN1		D340201212210S			
	L2304,2305	00D9630223009	R,THICK 0-J,1/16W		C20000006M160S			
	L2306	nsp	R,CHIP 0-J,1/10W		C200000060201S			
	L2501-2506	nsp	COIL,BEAD BLM21PG221SN1		D340201212210S			
	L2513-2515	nsp	COIL,BEAD BLM21PG221SN1		D340201212210S			
	L2516	963115003230S	COIL,BEAD CBW160808U121T		D340160811210S			
	L2766	00D9630223009	R,THICK 0-J,1/16W		C20000006M160S			
	L2825	nsp	R,CHIP 0-J,1/10W		C200000060201S			
	L2830	nsp	R,CHIP 0-J,1/16W		C20000006M160S			
	X1001,1002	141810044504S	CRYSTAL CHIP FCX-04(28.63636MHz)		E80528R636380S			
	X1701	141810046500S	CRYSTAL CHIP FCX-04(24.576MHz)		E80524R576080S			
	X1902	141810047503S	CRYSTAL CHIP FCX-04(20.815MHz)		E80520R815080S			
	X2302	963141010270S	CRYSTAL CHIP FCX-04C(12MHz)		E80512R000080S			
	X3102	141810048506S	CRYSTAL CHIP FCX-04(16MHz)		E80516R000080S			
	X3302	141810048506S	CRYSTAL CHIP FCX-04(16MHz)		E80516R000080S			
	K1001-1004	644010108608S	HDMI CONNECTOR(YKF45-7074N)		L109100190450S			⚠3
	K1501	644010108608S	HDMI CONNECTOR(YKF45-7074N)		L109100190450S			⚠3
	K1702	00D9630237503	MODULE JSR1165-C		E100116500040S			
	K1703	00D9630237503	MODULE JSR1165-C		E100116500040S			
	K1706	963646012160S	TER,RCA 1PIN		G600107C0BK0YS		*	
	K3103	nsp	JACK,D3.5 EARPHONE		G40130802000YS			
	N1701	nsp	CN.FPC 7P		L130100160730S			
	N2501	nsp	CN.WAFER 5P		L102050010040S			
	N2701	nsp	CN,WAFER 19P		L109012521910S			
	N2702	nsp	CN,WAFER 17P		L109012521710S			
	N2704	nsp	CN,WAFER 19P		L109012521910S			
	N2705	nsp	CN,WAFER 17P		L109012521710S			
	N2706	nsp	CN.WAFER 5P		L101200100510S			
	N2707	nsp	CN.WAFER 33P		L109012523310S			
	N2708	nsp	CN,WAFER 25P		L109012522510S			
	N2709	nsp	CN,WAFER 11P		L109012521110S			
	N2710	nsp	CN.FPC 40P		L130100220400S			
	N2901	nsp	CN.FPC 4P		L130100090440S			
	N3101	nsp	CN.FPC 11P		L130100161130S			
	N3301	nsp	CN.FPC 11P		L130100161130S			
	N4401	nsp	CN.WAFER 5P		L101200100510S			
	Z1	nsp	CLAMP STYLE PIN 1P		4330210162000S			
		nsp	SHIELD CASE t0.3 A4		3070210646000S			