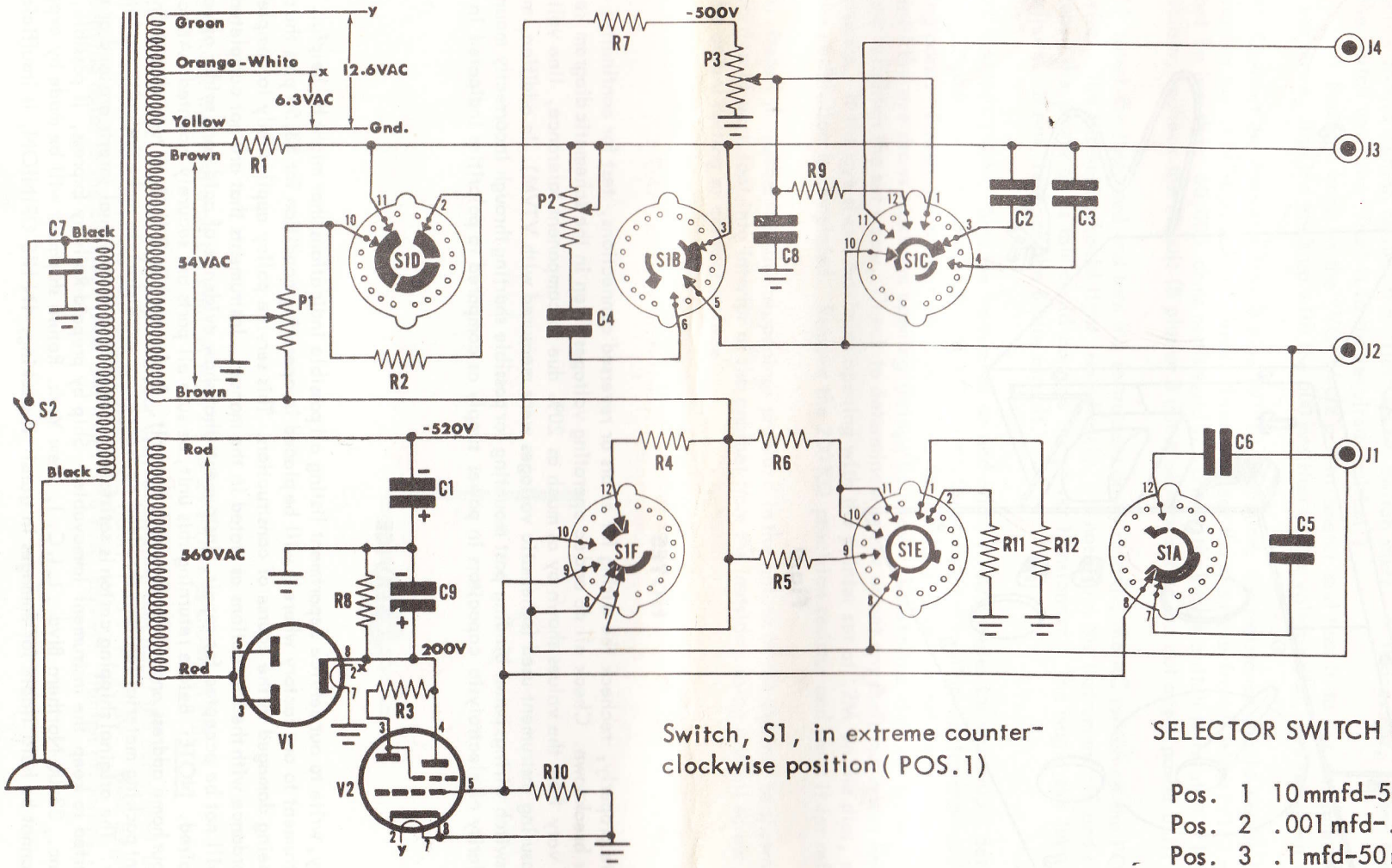

Switch, S1, in extreme counter-clockwise position (POS. 1)

SELECTOR SWITCH POSITIONS

Pos. 1	10 mmfd–5000 mmfd
Pos. 2	.001 mfd–.5 mfd
Pos. 3	.1 mfd–50 mfd
Pos. 4	50 mfd–5000 mfd
Pos. 5	.5 Ω – 500 Ω
Pos. 6	50 Ω – 50KΩ
Pos. 7	5KΩ – 5 MΩ
Pos. 8	5 MΩ – 500 MΩ
Pos. 9	Comparator
Pos. 10	Paper-Mica Test
Pos. 11	Electrolytic Test

Sym.	Description	Sym.	Description	Sym.	Description
C1	cap., elec 8 mfd–525 V	P3	pot., 100KΩ, 4W	R9	res., 270KΩ, 1/2 W
C2	cap., 200 mmf, prec.	R1	res., 500 Ω, 4 W	R10	res., 10MΩ, 1/2 W
C3	cap., .02 mf, prec.	R2	res., 250K, 1/2 W, 1%	R11	res., 2.2KΩ, 1W
C4	cap., 2 mf, prec.	R3	res., 1 MΩ, 1/2 W	R12	res., 470K, 1/2 W
C5,6,7	cap., .01 mf–400 V	R4	res., 20 Ω, 1/2 W, 1%		
C8	cap., .25 mf–600 V	R5	res., 2KΩ, 1/2 W, 1%	S1	switch, range
C9	cap., elec 4 mfd–250 V	R6	res., 200KΩ, 1/2 W, 1%	S2	switch, SPST, p/o P2
P1	pot., 10KΩ	R7	res., 3.3KΩ, 1W	V1	tube, 6X5
P2	pot., 1KΩ w/SPST	R8	res., 68KΩ, 1W	V2	tube, 1629

MODEL 950B
RESISTANCE-CAPACITANCE-COMPARATOR BRIDGE