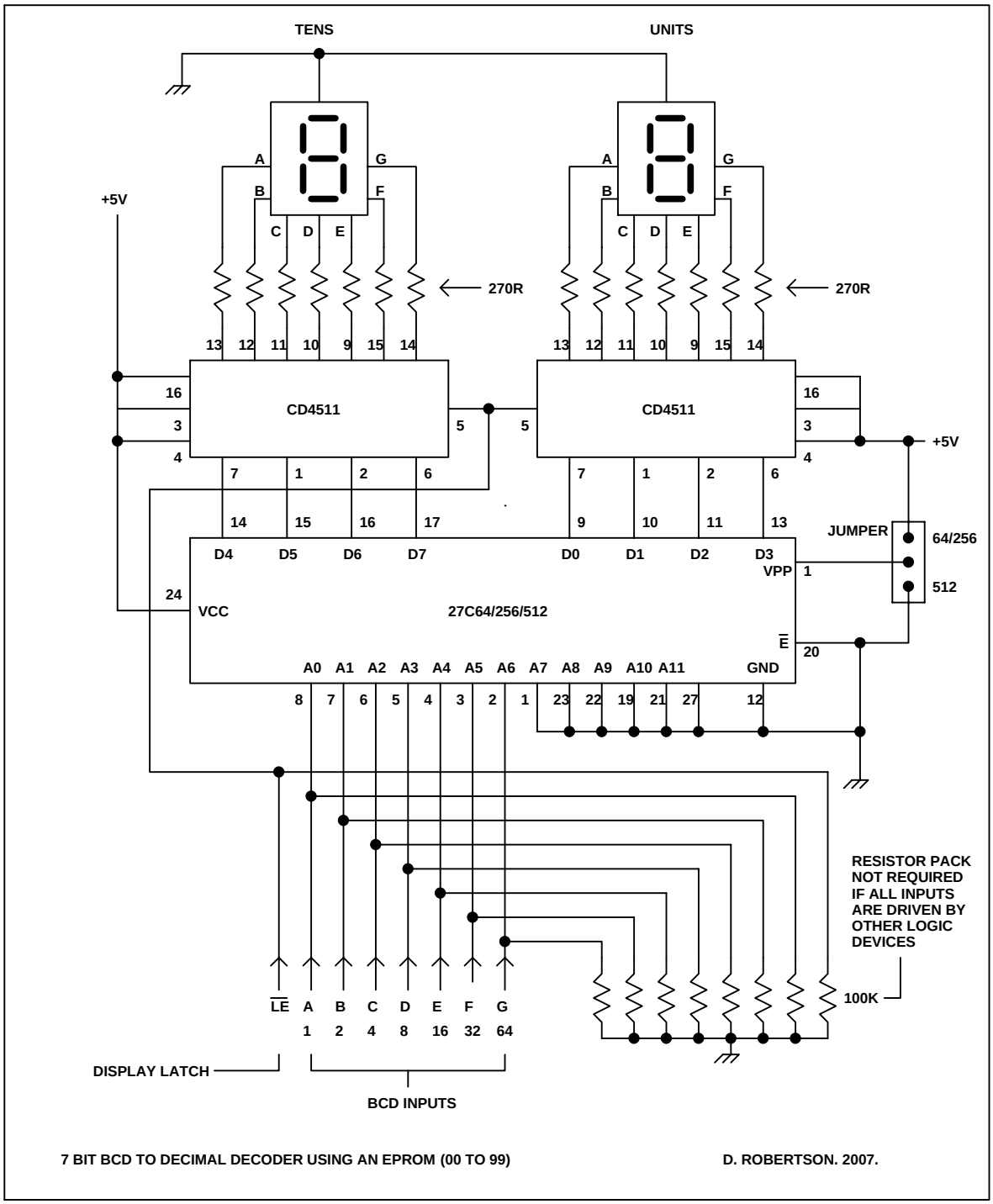

EPROM HEX DUMP:-

0F 1F 2F 3F 4F 5F 6F 7F 8F 9F 01 11 21 31 41 51
61 71 81 91 02 12 22 32 42 52 62 72 82 92 03 13
23 33 43 53 63 73 83 93 04 14 24 34 44 54 64 74
84 94 05 15 25 35 45 55 65 75 85 95 06 16 26 36
46 56 66 76 86 96 07 17 27 37 47 57 67 77 87 97
08 18 82 83 84 85 86 87 88 98 09 19 29 39 49 59
69 79 89 99 FF FF FF FF FF FF FF FF FF FF FF FF

ALL OTHER LOCATIONS ARE "FF"