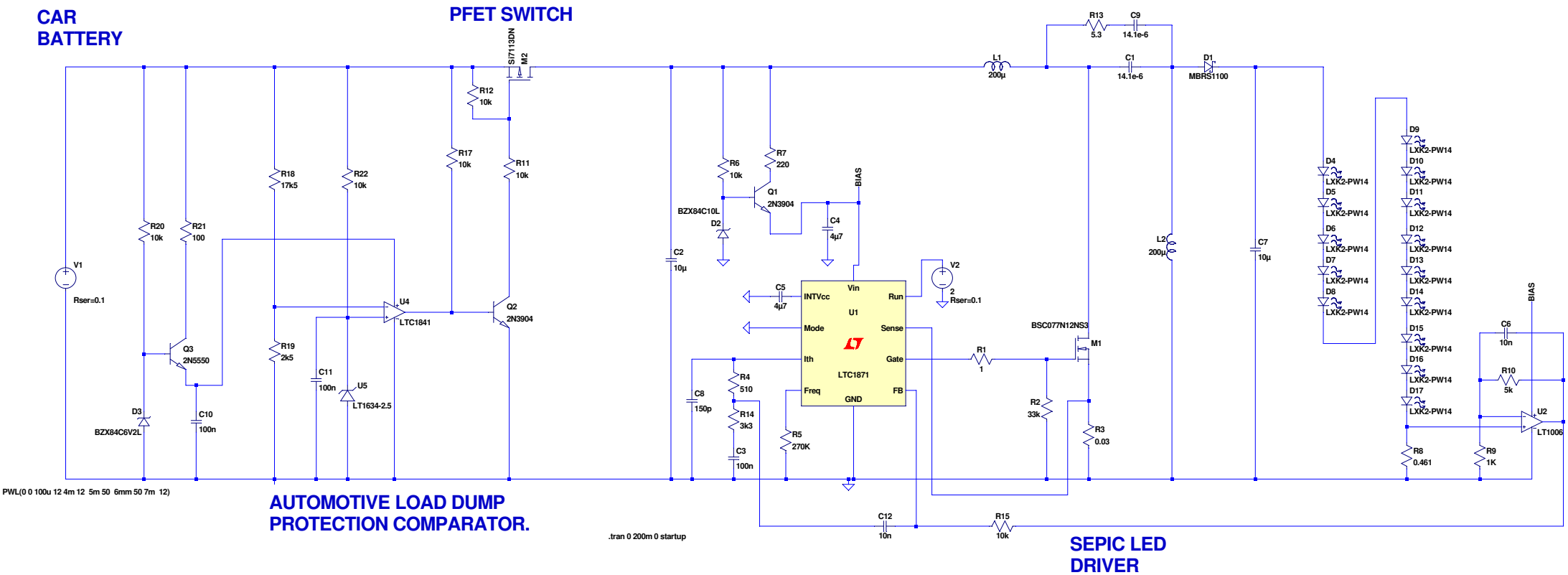

--- C:\forum\DUMP\AUTO LOAD DUMP.asc ---