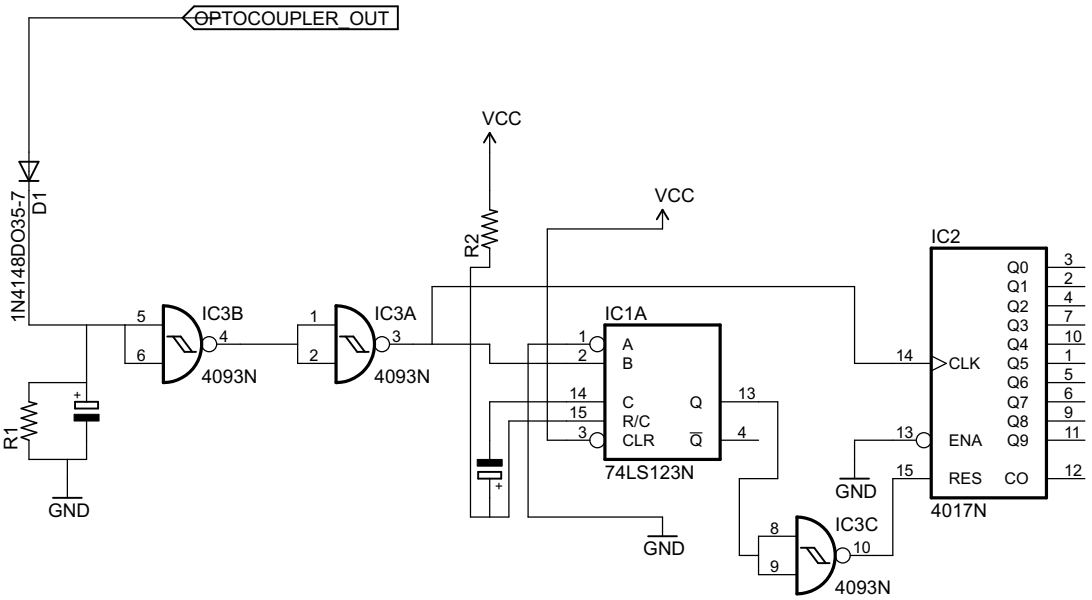

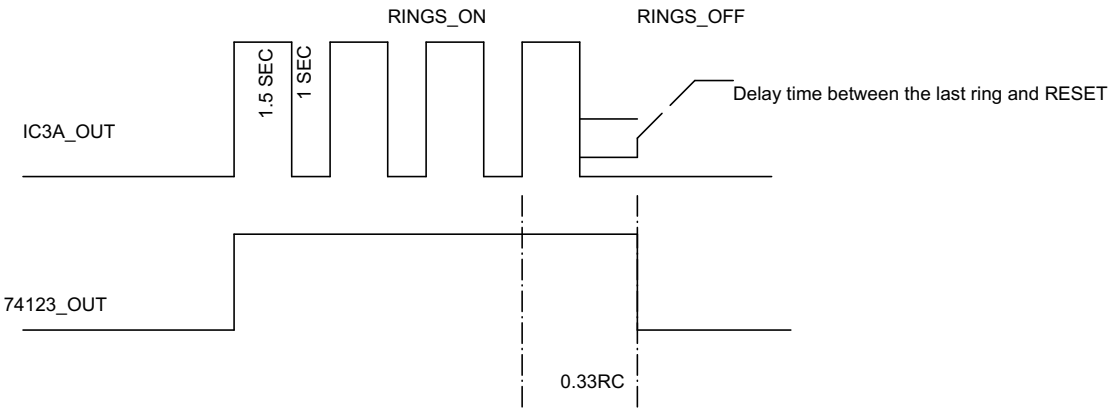

Date: 2/27/2010 1:59:40 PM	
TITLE: 74123	Sheet: 1/1