30W Offline linear current regulator LED driver.

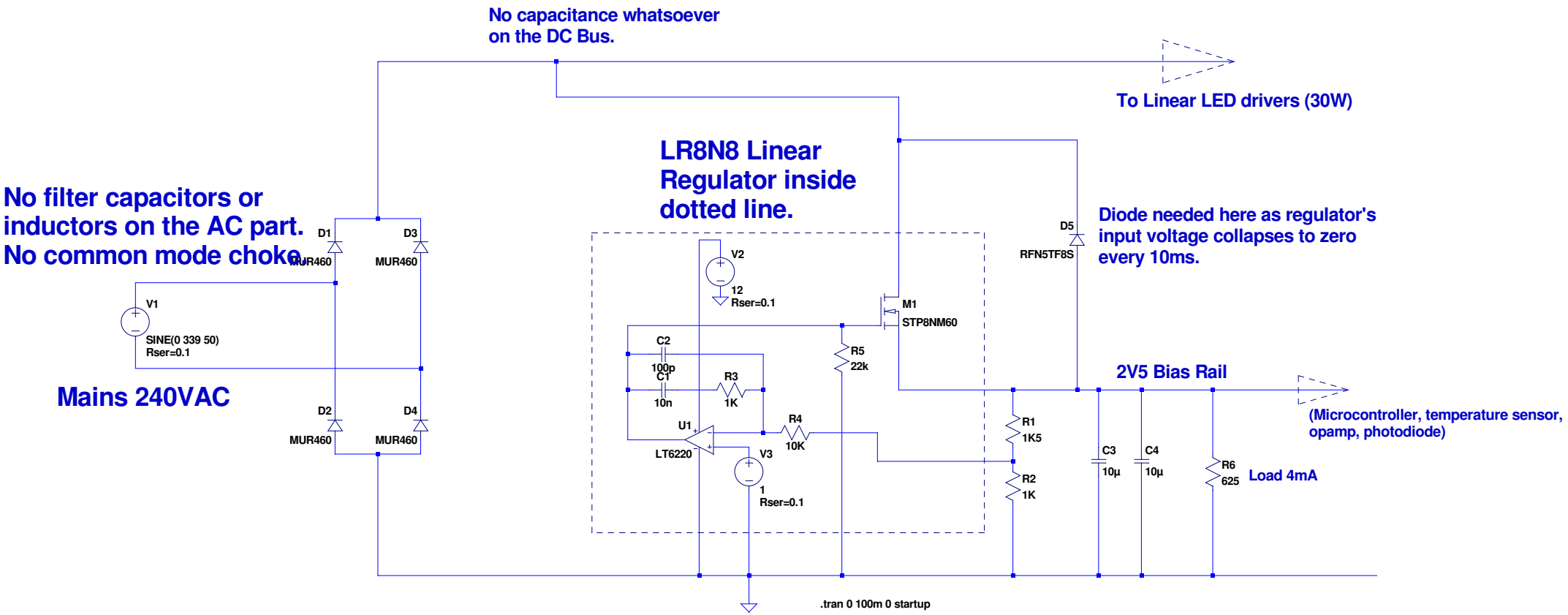

--- C:\forum\CLOWN 1\30W offline LED driver.asc ---