DENON

For U.S.A., Canada, Europe, Asia, China, Hong Kong & Taiwan R.O.C. model

Hi-Fi Component

SERVICE MANUAL

MODEL AVR-2802/982

AV SURROUND RECEIVER

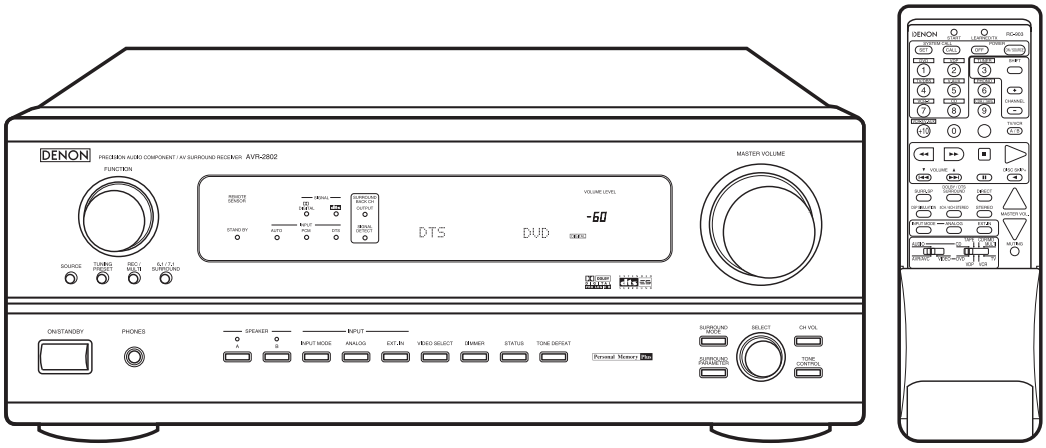

● **Some illustrations using in this service manual are slightly different from the actual set.**

NIPPON COLUMBIA CO., LTD.

14-14, AKASAKA 4-CHOME, MINATO-KU, TOKYO 107-8011 JAPAN
Telephone: 03 (3584) 8111

X0119 1174 NC 0112

Downloaded from www.Manualslib.com manuals search engine

SAFETY PRECAUTIONS

The following check should be performed for the continued protection of the customer and service technician.

LEAKAGE CURRENT CHECK

Before returning the unit to the customer, make sure you make either (1) a leakage current check or (2) a line to chassis resistance check. If the leakage current exceeds 0.5 milliamps, or if the resistance from chassis to either side of the power cord is less than 460 kohms, the unit is defective.

SPECIFICATIONS

■ AUDIO SECTION

● Power Amplifier

Rated output:	Front:	90W + 90W (8Ω/ohms, 20Hz ~ 20kHz with 0.05% T.H.D.)
		135W + 135W (6Ω/ohms, 1kHz with 0.7% T.H.D.)
		150W + 150W (6Ω/ohms, EIAJ)
	Center:	90W (8Ω/ohms, 20Hz ~ 20kHz with 0.05% T.H.D.)
		135W (6Ω/ohms, 1kHz with 0.7% T.H.D.)
		150W (6Ω/ohms, EIAJ)
	Surround:	90W + 90W (8Ω/ohms, 20Hz ~ 20kHz with 0.05% T.H.D.)
		135W + 135W (6Ω/ohms, 1kHz with 0.7% T.H.D.)
		150W + 150W (6Ω/ohms, EIAJ)
	Surround Back:	90W (8Ω/ohms, 20 Hz ~ 20kHz with 0.05% T.H.D.)
		135W (6Ω/ohms, 1kHz with 0.7% T.H.D.)
		150W (6Ω/ohms, EIAJ)
Dynamic power:		120W × 2ch (8Ω/ohms)
		170W × 2ch (4Ω/ohms)
		200W × 2ch (2Ω/ohms)
Output terminals:	Front:	A or B 6 ~ 16Ω/ohms
		A + B 8 ~ 16Ω/ohms
	Center, Surround, Surr.Back:	6 ~ 16Ω/ohms

● Analog

Input sensitivity/input impedance:	200mV/47kΩ/kohms
Frequency response:	10Hz ~ 100kHz: +0, –3dB (DIRECT mode)
S/N:	102dB (DIRECT mode)
Distortion:	0.005% (20Hz ~ 20kHz) (DIRECT mode)
Rated output:	1.2V

● Digital

D/A output:	Rated output — 2V (at 0dB playback)
	Total harmonic distortion — 0.008% (1 kHz, at 0 dB)
	S/N ratio — 102dB
	Dynamic range — 96dB
Digital input:	Format — Digital audio interface

● Phono equalizer (PHONO input — REC OUT)

Input sensitivity:	2.5mV
RIAA deviation:	±1dB (20Hz to 20kHz)
Signal-to-noise ratio:	74dB (A weighting, with 5mV input)
Rated output/Maximum output:	150mV/7V
Distortion factor:	0.03% (1kHz, 3V)

■ VIDEO SECTION

● Standard video jacks

Input/output level and impedance:	1Vp-p, 75Ω/ohms
Frequency response:	5Hz ~ 10MHz — +0, –3dB

● S-video jacks

Input/output level and impedance:	Y (brightness) signal — 1Vp-p, 75Ω/ohms
	C (color) signal — 0.286Vp-p, 75Ω/ohms
Frequency response:	5Hz ~ 10MHz — +0, –3dB

● Color component video jacks

Input/output level and impedance:	Y (brightness) signal — 1Vp-p, 75Ω/ohms
	PB/CB (blue) signal — 0.7Vp-p, 75Ω/ohms
	PR/CR (red) signal — 0.7Vp-p, 75Ω/ohms
Frequency response:	5Hz ~27MHz — +0, –3dB

■ TUNER SECTION

	[FM] (note: µV at 75Ω/ohms, 0dBf=1 × 10^{-15} W)	**[AM]**
Receiving Range:	87.50MHz ~ 107.90MHz	520kHz ~ 1710kHz
	(for U.S.A., Canada and multiple voltage models)	(for U.S.A., Canada and Multiple voltage models)
	87.50MHz ~ 108.00MHz	522kHz ~ 1611kHz
	(for Europe, Asia, China, Hong Kong, Taiwan R.O.C. and Multiple voltage models)	(for Europe, Asia, China, Hong Kong, Taiwan R.O.C. and multiple voltage models)
Usable Sensitivity:	1.0µV (11.2dBf)	18µV
50dB Quieting Sensitivity:	MONO: 1.6µV (15.3dBf)	
	STEREO: 23µV (38.5dBf)	
S/N (IHF-A):	MONO: 77dB	
	STEREO: 72dB	
Total Harmonic Distortion (at 1kHz):	MONO: 0.15%	
	STEREO: 0.3%	

■ GENERAL

Power supply:	AC120V, 60Hz (for U.S.A., Canada and Taiwan R.O.C. models)
	AC230V, 50Hz (for Europe model)
	AC220V, 50Hz (for China model)
	AC115V/230V, 50/60Hz (for Asia, Hong Kong and Multiple voltage models)
Power consumption:	5.0A (for U.S.A.& Canada model)
	270W (for Europe, Asia, China, Hong Kong and Multiple voltage models)
	650W (for Taiwan R.O.C. model)
	2.0W Max (Standby)
Maximum external dimensions:	434 (W) × 171 (H) × 416 (D)mm (17-3/32″ × 6-11/32″ × 16-3/8″)
Weight:	11.5kg (25 lbs 6 oz)

■ REMOTE CONTROL UNIT (RC-903: for U.S.A., Canada, Asia, China, Hong Kong, Taiwan R.O.C. and Multiple voltage models) (RC-904: for Europe model)

Batteries:	R6P/AA Type (three batteries)
External dimensions:	70 (W) × 215 (H) × 24 (D)mm (2-3/4″ × 8-15/32″ × 15/16″)
Weight:	200g (Approx. 7 oz) (including batteries)

* For purposes of improvement, specifications and design are subject to change without notice.

Downloaded from www.Manualslib.com manuals search engine

WIRE ARRANGEMENT

If wire bundles are untied or moved to perform adjustment or parts replacement etc.,be sure to rearrange them neatly as they were originally bundled or placed afterward.
Otherwise, incorrect arrangement can be a cause of noise generation.

Wire arrangement viewed from the top

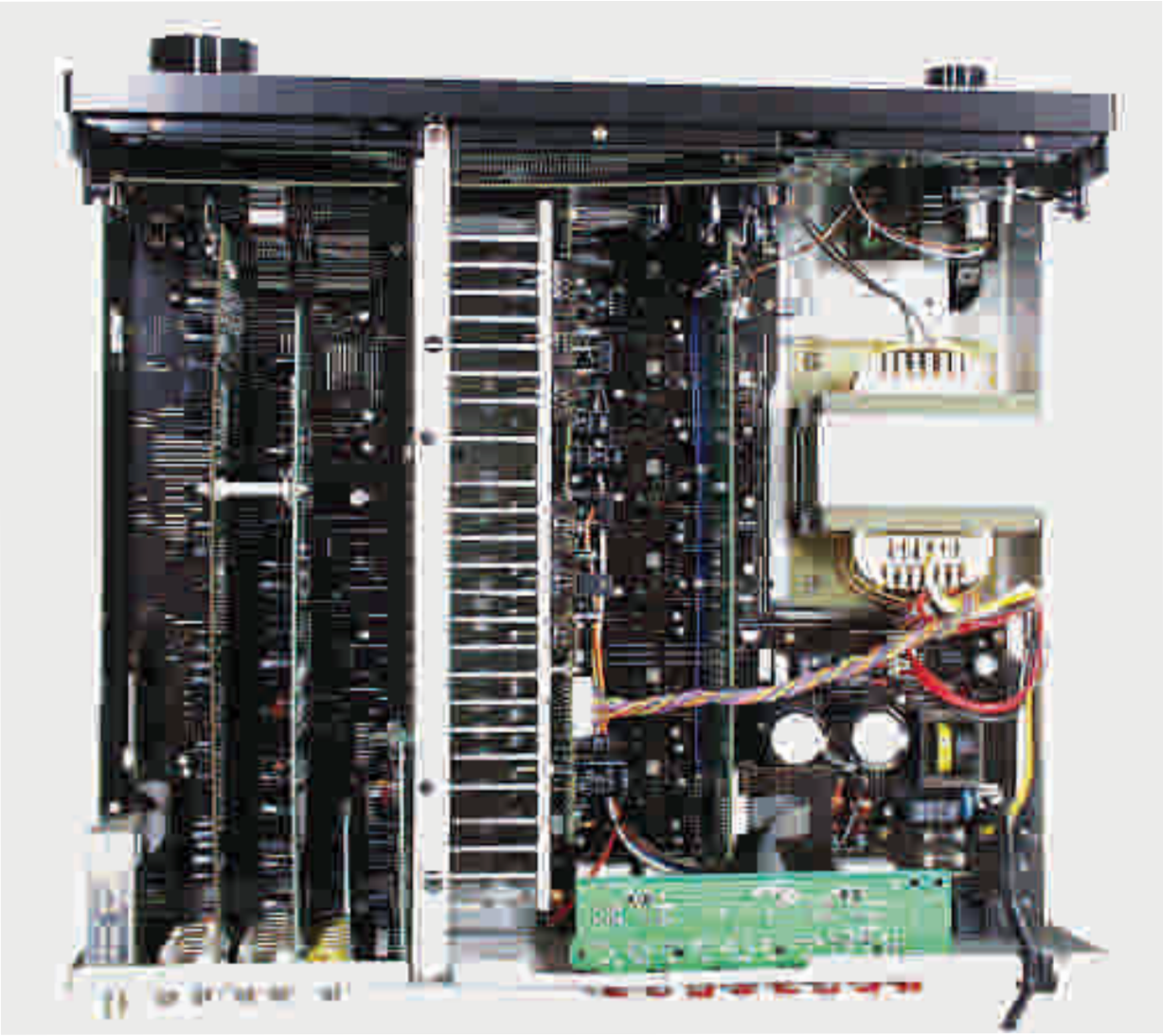

Downloaded from www.Manualslib.com manuals search engine

DISASSEMBLY

(Follow the procedure below in reverse order when reassembling)

1. Top Cover

Remove 3 screws ① on the rear and 6 screws ② on both sides to detach the Top Cover as shown in the arrow direction.

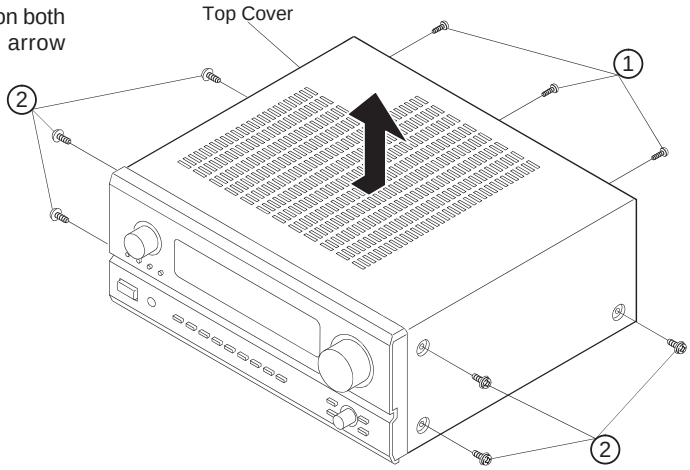

2. Front Panel

(1) Remove 7 screws ③ from the top and bottom edges of the Front Panel.

(2) Release 4 top and bottom hooks, then detach the Front Panel as shown in the arrow direction.

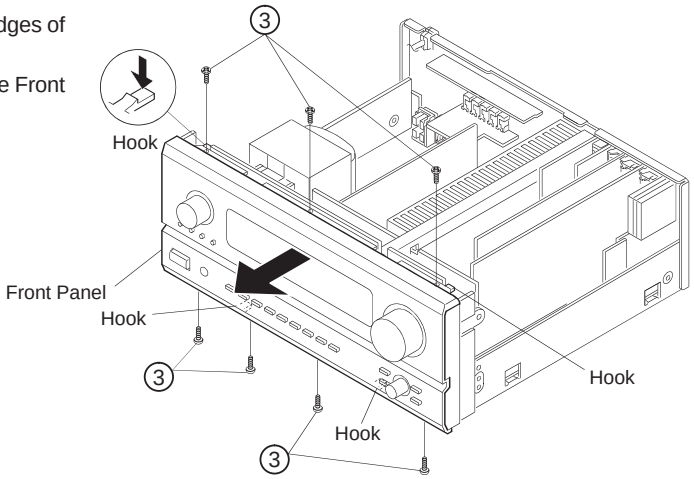

3. Inner Panel

Pull out the Inner Panel in the arrow direction after removing 3 screws ④.

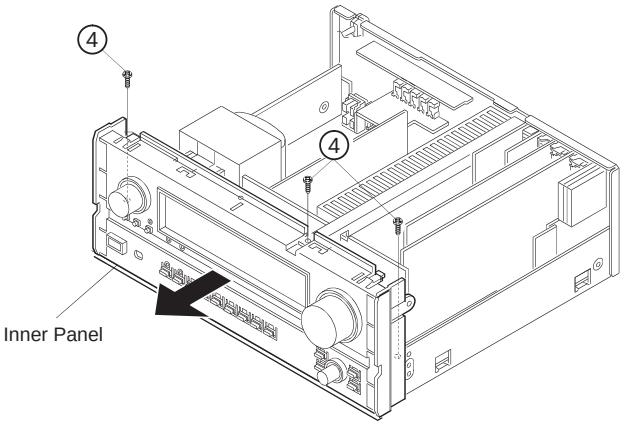

Downloaded from www.Manualslib.com manuals search engine

4. Inner Panel Ass'y

(1) Remove 3 round and 1 square knobs, and unscrew 4 nuts.

(2) Remove 15 screws (5) fixing each P.W.B.

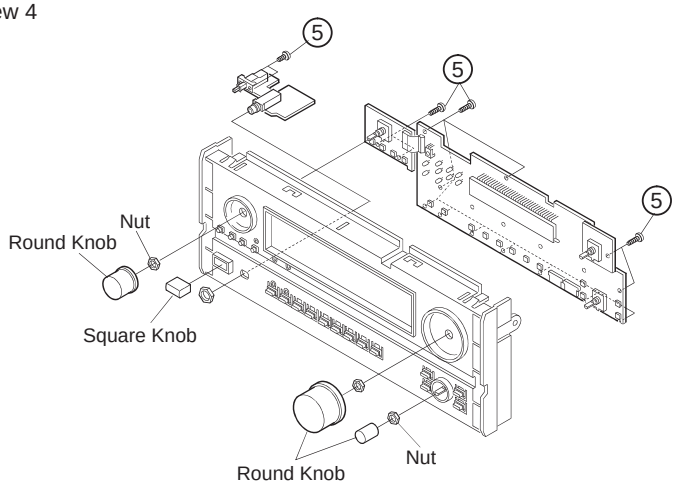

5. Amp Connect Unit

(1) Remove 3 screw (6) to detach Pre-out Unit (7).

(2) Take off the Amp Connect Unit (8) as shown in the arrow direction after removing 1 screw (9).

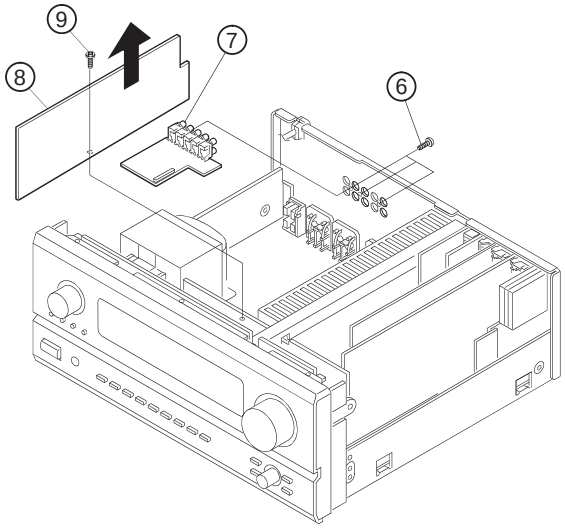

6. Regulator Unit

Take off the Regulator Unit (▯▯) as shown in the arrow direction after removing 9 screws (▯▯).

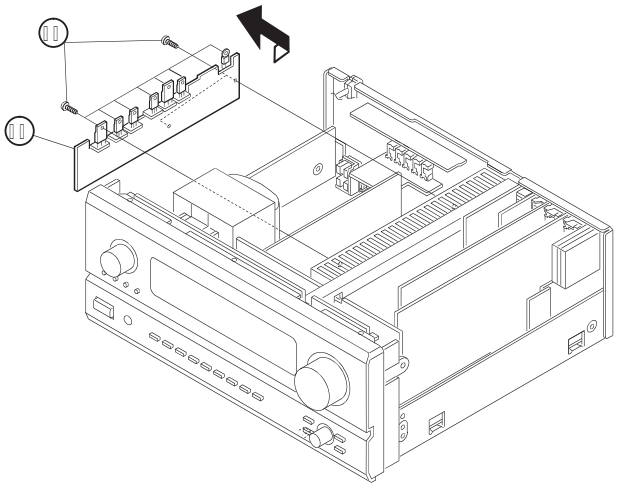

Downloaded from www.Manualslib.com manuals search engine

7. Component-Video/S-Video / C-video / Audio & DSP / Ext-in VR / Digital-in / AM FM Tuner Unit

(1) Remove 44 screws to detach the Rear Panel.

(2) Take off the objective P.W.B. upward.

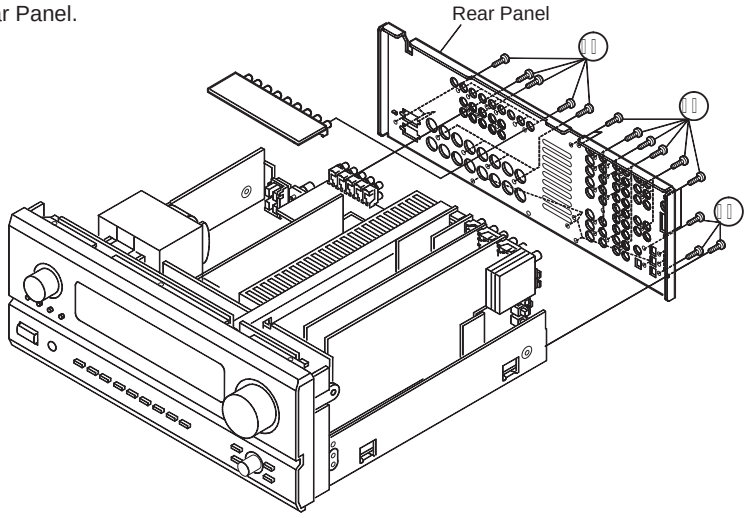

8. How to Check Power / Control Unit with Power-on

(1) Remove 13 screws ,and 4 screws fixing to the Chassis.

(2) Pull up the Unit to separate from the Chassis.

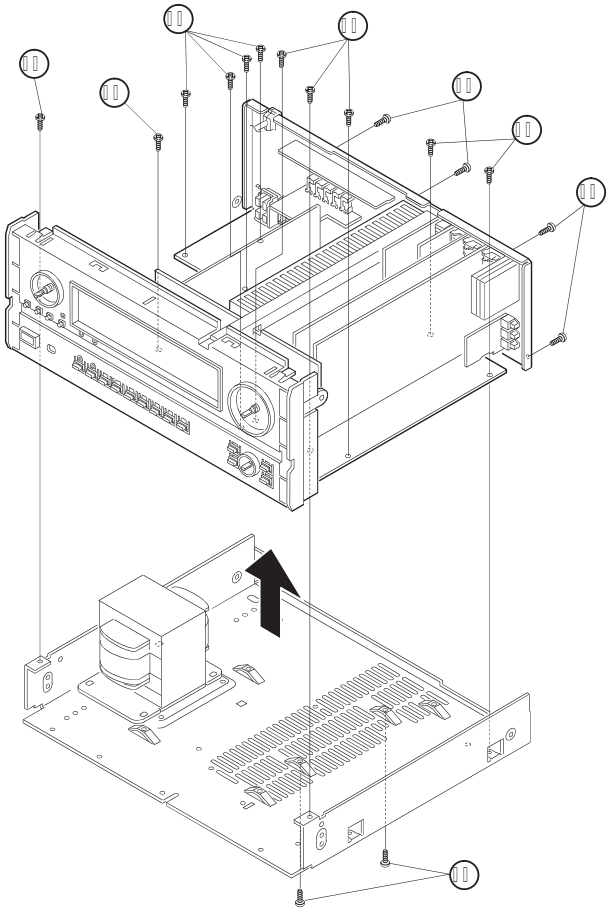

Downloaded from www.Manualslib.com manuals search engine

CLOCK FLOW & WAVE FORM IN DIGITAL BLOCK

Wave Form

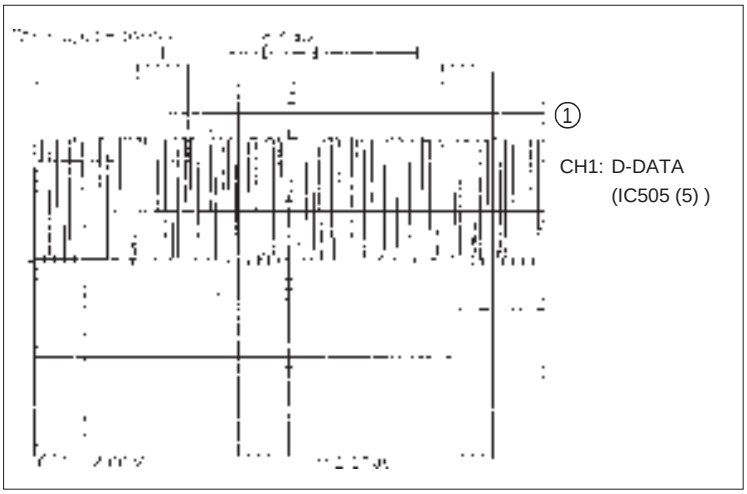

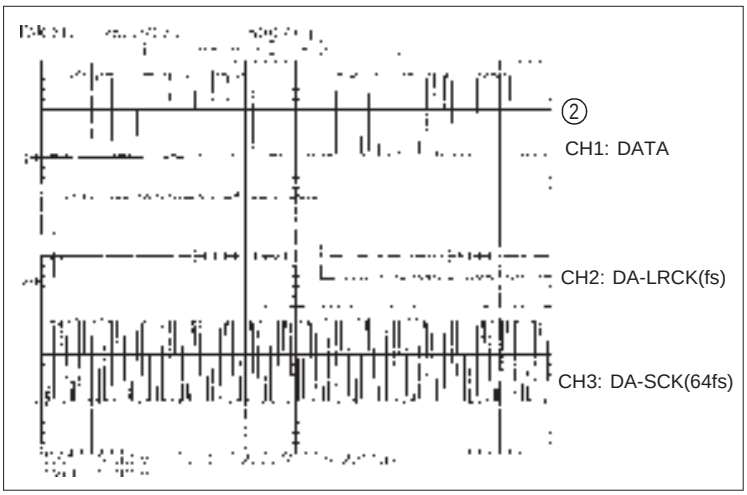

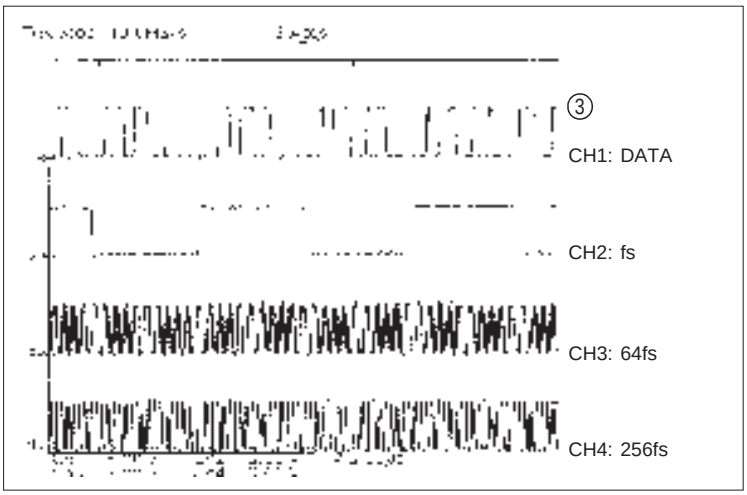

Downloaded from www.Manualslib.com manuals search engine

Clock Flow

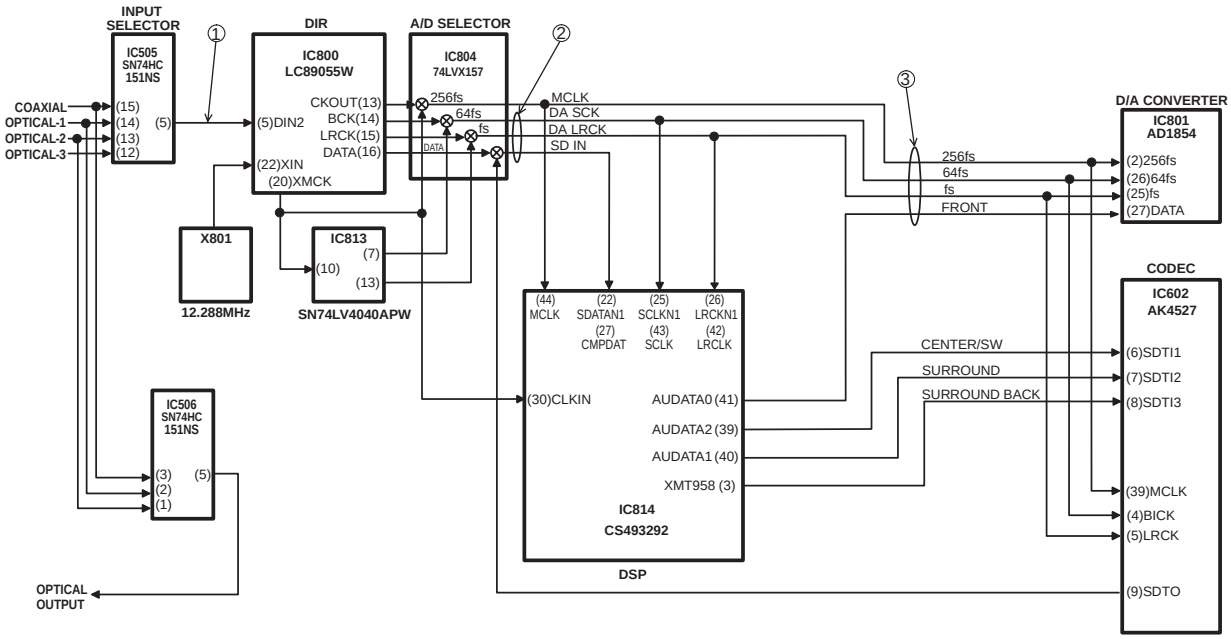

* fs is a sampling frequency of input digital signal.
  e.g.:sampling frequency 48kHz fs=48kHz
* 64fs and 256fs are 64 or 256 times the sampling frequency respectively.
  e.g.: sampling frequency 48kHz
  64fs: 48kHz x 64=3.072MHz
  256fs: 48kHz x 256=12.288MHz
* The sampling frequency for analog input is fixed to 48kHz internally.
* (No.) indicates the pin number of individual.
* The arrow indicates the direction of signal as the input terminal pointed by the arrow and the output terminal by the opposite.

Downloaded from www.Manualslib.com manuals search engine

BLOCK DIAGRAM

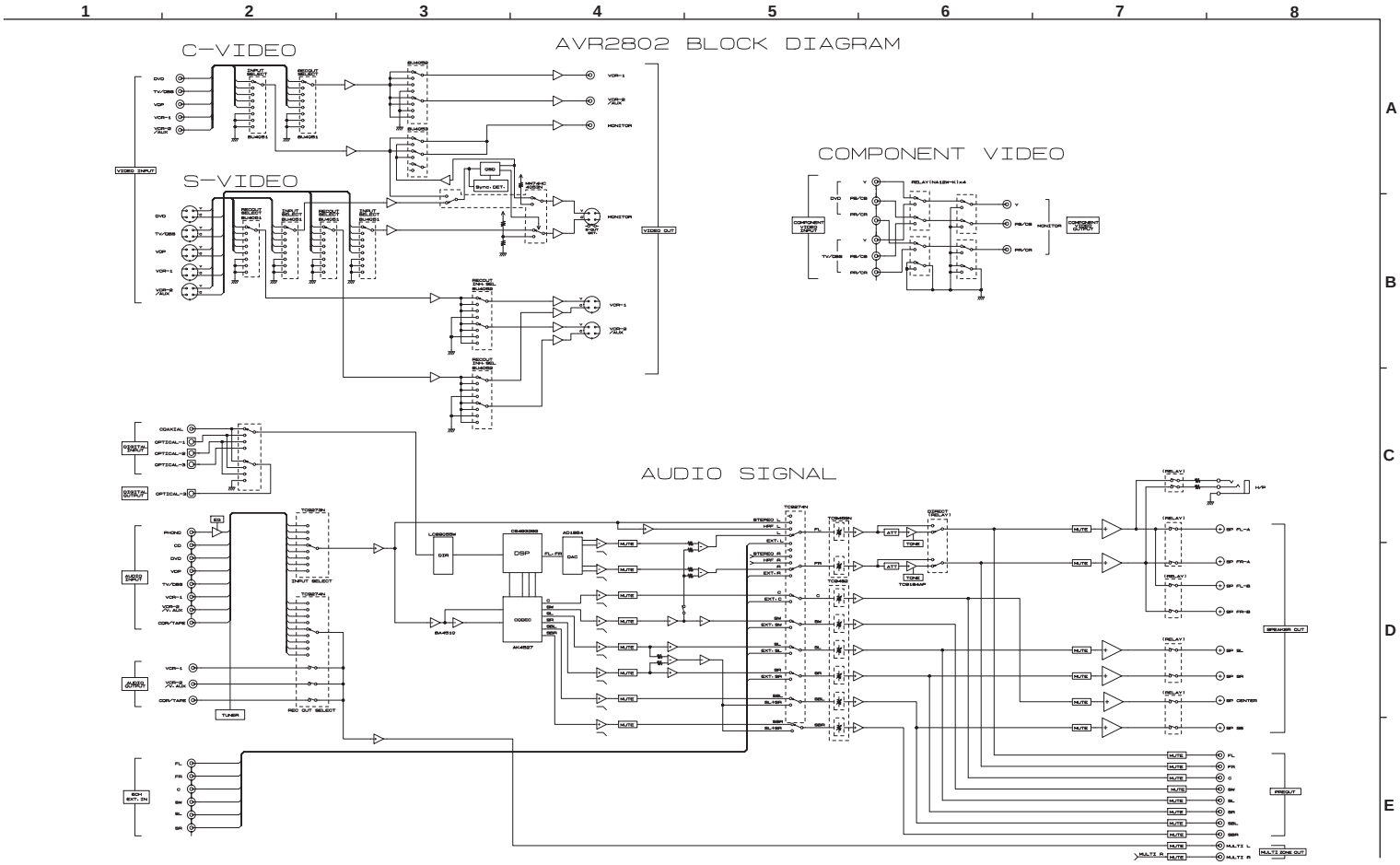

Downloaded from www.Manualslib.com manuals search engine

LEVEL DIAGRAMS (1/3)

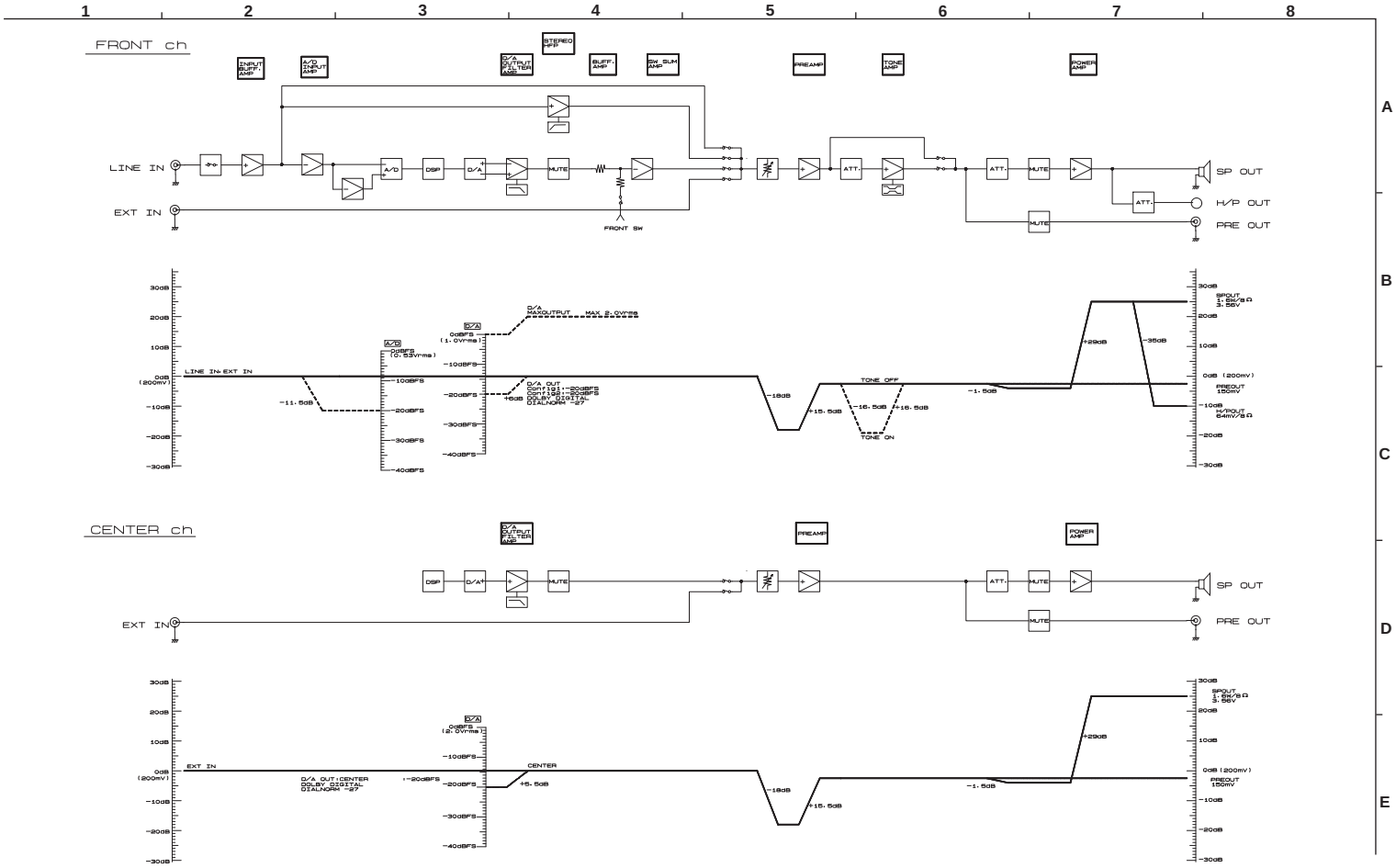

Downloaded from www.Manualslib.com manuals search engine

LEVEL DIAGRAMS (2/3)

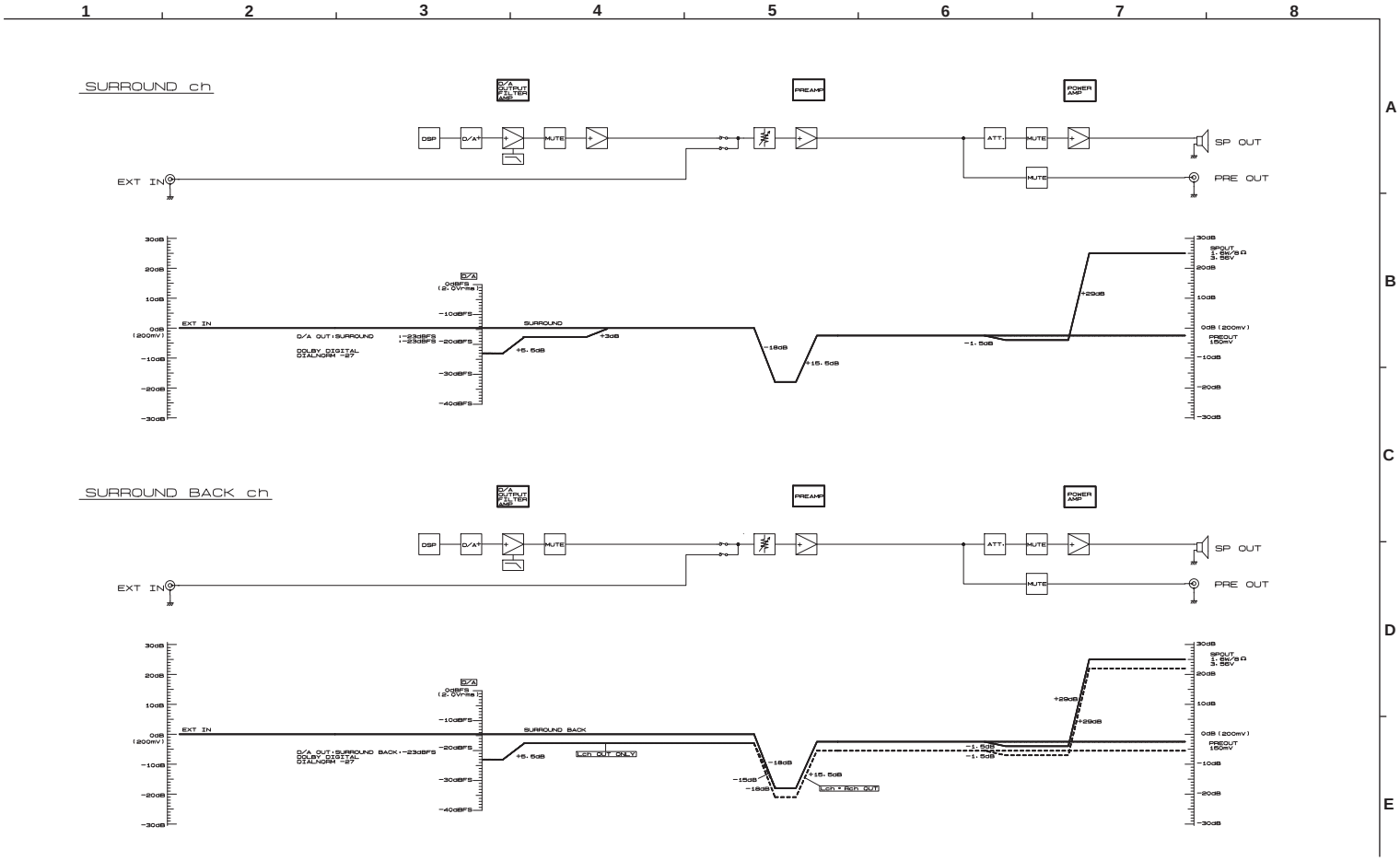

Downloaded from www.Manualslib.com manuals search engine

LEVEL DIAGRAMS (3/3)

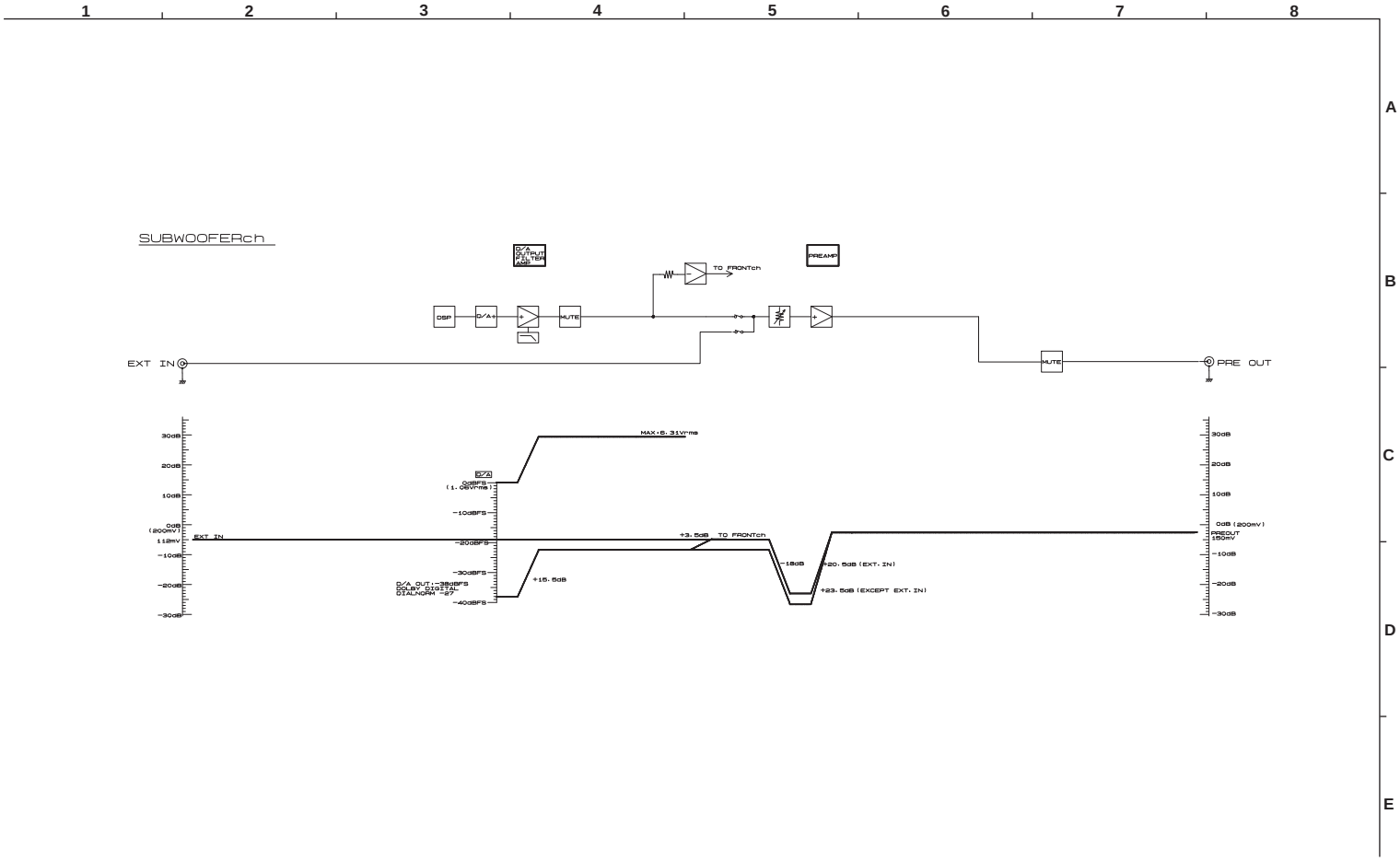

Downloaded from www.Manualslib.com manuals search engine

CAUTION IN SERVICING

● Initializing AV SURROUND RECEIVER

AV SURROUND RECEIVER initialization should be performed when the µcom, peripheral parts of µcom, and DSP P.W.B. are replaced.

1. Switch off the unit and remove the AC cord from the wall outlet.
2. Hold the following A button and B button, and plug the AC cord into the outlet.
3. Check that the entire display is flashing with an interval of about 1 second, and release your fingers from the 2 buttons and the microprocessor will be initialized.

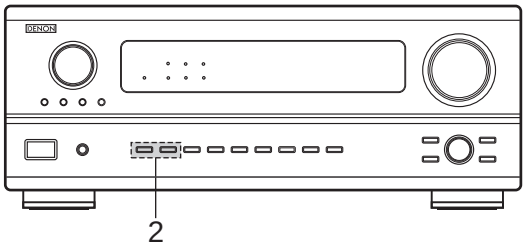

Note:
- If step 3 does not work, start over from step 1.
- All user settings will be lost and its factory setting will be recovered when this initialization mode. So make sure to memorize your setting for restoring after the initialization.

Downloaded from www.Manualslib.com manuals search engine

ADJUSTMENT

Idling Current (1U-3368-1)

Required measurement equipment : DC Voltmeter

Preparation

(1) Avoid direct blow from an air conditioner or an electric fan, and adjust the unit at normal room tempereture 15 °C ~ 30 °C (59 °F ~ 86 °F).

(2) Presetting
- POWER (Power sourse switch) → OFF
- SPEAKER (Speaker terminal) → No load (Do not connect speaker, dummy resistor, etc.)

Adjustment

(1) Remove top cover and set VR101, VR102, VR201, VR202, VR301, VR401, on 1U-3368-1 (Power Unit) at fully counterclockwise ( ).

(2) Connect DC Voltmeter to test points (FRONT-Lch: TP101, FRONT-Rch: TP102, CENTER ch: TP103, SURROUND-Lch: TP101, SURROUND-Rch: TP103, SURROUND BACK-ch: TP102).

(3) Connect power cord to AC Line, and turn power switch "ON".

(4) Presetting.
MASTER VOLUME : "---" counterclockwise (min.)
MODE : 6CH STEREO
FUNCTION : CD

(5) Allow 2 minutes, and turn VR101 clockwise ( ) to adjust the TEST POINT voltage to 6.5 mV ±0.5 mV DC.

(6) After 10 minutes from preset, turn VR101 to set the voltage to 8 mV ±0.5 mV DC.
(7) Adjust the Variable Resistors of other channels in the same way.
(8) After 5 minutes from (6), turn VR101 to set the voltage to 8 mV ±0.5 mV DC.
(9) Adjust the Variable Resistors of other channels in the same way.

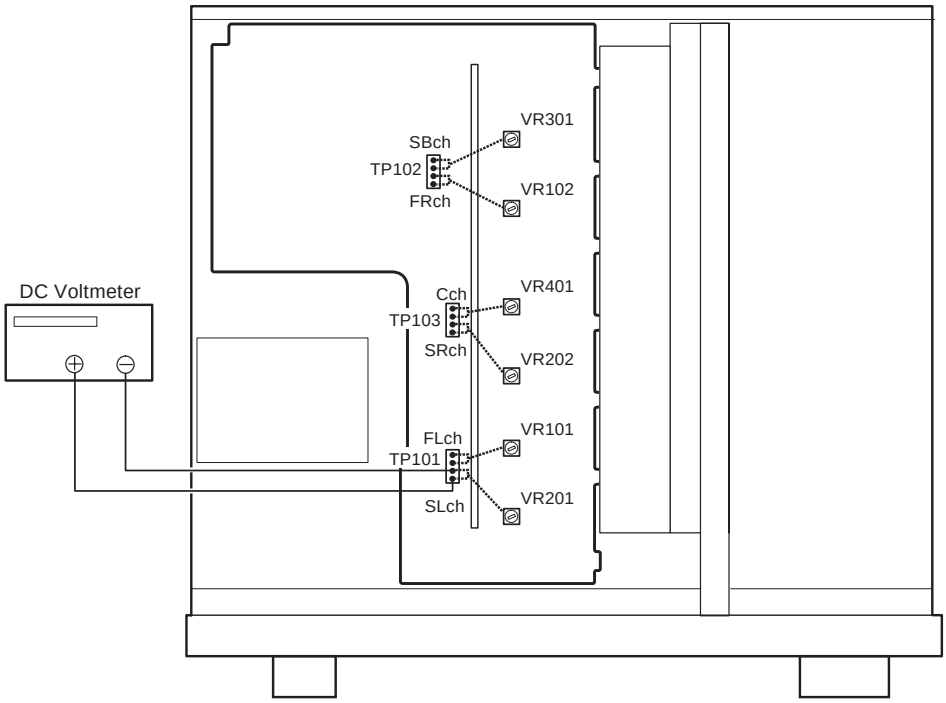

Downloaded from www.Manualslib.com manuals search engine

SEMICONDUCTORS

● IC's

Note: Abbreviation ahead of IC No. indicates the name of P.W.B.

PO: Power P.W.B. RE: Regulator P.W.B.
EX: Exit in P.W.B. AU: Audio/DSP P.W.B.
CO: Control P.W.B.

TMP88CU74F
(CO: IC303)

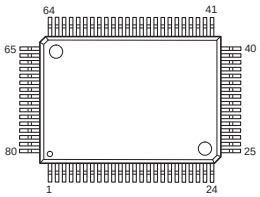

TMP88CU74F Terminal Function

Pin No.	Name	Symbol	I/O	Type	Op	Det	Res	Init	Function
1	P02/S01	RDS RESET	O	C	—	—	Z	L	RDS reset output (LC72720)
2	P03	OSD RST	O	C	—	—	Z	H	OSD control output (M35015)
3	P04	PLL DATA	I	—	—	—	—	—	PLL Serial data input terminal (LC72131)
4	P05	PLFLRDS DATA	O	C	—	—	Z	L	PLL, FL, RDS control terminal (LC72131 & LC75721, LC72720)
5	P06	PLL STB	O	C	—	—	Z	L	PLL control terminal (LC72131)
6	P07	PLFLRDS CLK	O	C	—	—	Z	L	PLL, FL, RDS control terminal (LC72131 & LC75721, LC72720)
7	Vss	Vss	I	—	GND	—	—	L	GND
8	Xout	Xout	O	—	—	—	—	—	XTAL
9	Xin	Xin	I	—	—	—	—	—	XTAL
10	RESET_	RESET_	I	—	Eu	Lv	L	—	Reset input
11	P22/XTOUT	TUNED_	I	—	Eu	Lv	Z	—	Tuning detect, L: Tuned
12	P21/XTIN	STEREO_	I	—	Eu	Lv	Z	—	L: At stereo receive
13	TEST	TEST	I	—	GND	S	—	—	Connect to GND
14	P20/INT5_	B.DOWN_	I	—	Eu	Lv	Z	—	Power down detect, L: Power down
15	P10/INT0_	PROTECT_	I	—	Ed	E&L	Z	—	PROTECTION detect input, H: Detect
16	P11/INT1	RDS DATA	I	—	—	—	Z	L	RDS data input (LC72720)
17	P12	OSD CLK	O	C	—	—	Z	H	OSD control output (M35015)
18	P13	OSD CS	O	C	—	—	Z	H	OSD control output (M35015)
19	P14	OSD DATA	O	C	—	—	Z	L	OSD control output (M35015)
20	P15/INT3	REMOCON	I	—	Ed	E&L	Z	—	Remote control signal input
21	P16/INT2	ACK	O	C	—	—	Z	L	MAIN-SUB CPU comm. control terminal
22	P17/INT4	REQ	I	—	Eu	—	Z	L	MAIN-SUB CPU comm. control terminal
23	P30/SCL	SI	I						MAIN-SUB CPU comm. control terminal
24	P31/SDA	SO	O	C					MAIN-SUB CPU comm. control terminal
25	P32/SCK0_	CLK	O	C					MAIN-SUB CPU comm. control terminal
26	P40/AIN0	MODE	I	—	Eu	Lv	Z	—	Destination switching input
27	P41/AIN1	KEY1	I	—	Eu	Lv	Z	—	Button input 1
28	P42/AIN2	KEY2	I	—	Eu	Lv	Z	—	Button input 2
29	P43/AIN3	KEY3	I	—	Eu	Lv	Z	—	Button input 3
30	P44/AIN4	FUNC STB1	O	C	—	—	Z	L	Function control output, REC OUT (TC9274-011), EXT/SOURCE (TC9274-017)
31	P45/AIN5	FUNC/T. CON CLK	O	C	—	—	Z	L	Function control output (TC9274N, TC9273), TONE control output (TC9184P)
32	P46/AIN6	FUNC/T. CON DATA	O	C	—	—	Z	L	Function control output (TC9274N, TC9273), TONE control output (TC9184P)
33	P47/AIN7	E.VOL STB4	O	C	—	—	Z	L	Elect. volume control output (TC9482)
34	P50/AIN8	E.VOL STB1	O	C	—	—	L	L	Elect. volume control output (TC9459)
35	P51/AIN9	TONE STB	O	C	—	—	L	L	TONE control output (TC9184P)
36	P52/AIN10	E.VOL DATA	O	C	—	—	L	H	Elect. volume control output (TC9459, TC9482)
37	P53/AIN11	E.VOL CLK	O	C	—	—	L	H	Elect. volume control output (TC9459, TC9482)
38	VASS	VASS	I						Ref. volt (GND)
39	VAREF	VAREF	I						Ref. volt (VDD)
40	VDD	VDD	I						Power supply
41	P60	FL CE	O	P	Ed	S	L	H	FL display control output (LC75721NE)
42	P61	FL RES	O	P	Ed	S	L	H	FL display control output (LC75721NE)
43	P62	FUNC STB2	O	P	Ed	—	Z	L	Function control output (TC9273), INPUT (TC9273)
44	P63	FA-RELAY	O	P	Id	—	L	L	Front SP relay A control terminal, L: Mute
45	P64	FB-RELAY	O	P	Id	—	L	L	Front SP relay B control terminal, L: Mute
46	P65	C-RELAY	O	P	Id	—	L	L	Center SP relay control terminal, L: Mute
47	P66	S-RELAY	O	P	Id	—	L	H	Surround SP relay control terminal, L: Mute
48	P67	PRE F MUTE	O	P	Ed	—	L	H	Front PRE OUT mute control terminal, L: Mute
49	P70	PRE C MUTE	O	P	Ed	—	L	L	Center PRE OUT mute control terminal, L: Mute
50	P71	PRE S MUTE	O	P	Ed	—	L	L	Surround PRE OUT mute control terminal, L: Mute
51	P72	SUB WOOFER MUTE	O	P	Ed	—	L	H	Sub-woofer PRE OUT mute control terminal, L: Mute
52	P73	H/P RELAY	O	P	Id	—	L	H	H/P OUT relay control terminal, L: Mute
53	P74	EXP OE	O	P	Ed	—	L	H	Port expander control terminal (BU4094)
54	P75	EXP CLK	O	P	Ed	—	L	L	Port expander control terminal (BU4094)
55	P76	EXP DATA	O	P	Ed	—	L	L	Port expander control terminal (BU4094)
56	P77	EXP STB	O	P	Ed	—	L	L	Port expander control terminal (BU4094)
57	P80	POWER	O	P	Id	—	L	H	Power relay control output, H: ON
58	P81	RESET2	O	P	Id	—	L	L	Reset signal output to sub-CPU, H: Reset
59	P82	PRE S.BACK MUTE	O	P	Id	—	L	L	Surround Back PRE PUT mute control terminal, L: Mute
60	P83	S.BACK VOL MUTE	O	P	Id	—	L	L	Surround Back volume mute, L: Mute
61	P84	STANDBY	O	P	Id	—	L	H	Standby LED drive output H: Light
62	P85	S.BACK RELAY	O	P	Id	—	L	L	Surround Back SP relay control terminal, L: Mute
63	P86	LED CK	O	P	Id	—	L	L	LED control terminal (BU2090F)
64	P87	LED DATA	O	P	Id	—	L	L	LED control terminal (BU2090F)
65	P90	TUNER MUTE	O	P	Ed	—	L	H	TUNER mute control terminal, L: Mute
66	P91	MULTI MUTE	O	P	Id	—	L	H	MULTI PREOUT mute control terminal, L: Mute
67	P92	S MONI DET	I	—	Eu	Lv	Z	—	S monitor connection detect input, L: Connected
68	P93	S SIG DET	I	—	Eu	Lv	Z	—	S signal detect input, H: Detected
69	P94	SYNC DET.	I	—	Eu	Lv	Z	—	Sync detect input, H: Ext. sync
70	P95	SEL A (M)	I	—	Eu	Lv	Z	—	Master volume rotation detect input (rotary encoder)
71	P96	SEL B (M)	I	—	Eu	Lv	Z	—	Master volume rotation detect input (rotary encoder)
72	P97	CINEMA EQ	O	P	Eu	Lv	Z	L	CINEMA EQ control output, H: ON
73	PD0	VOL MUTE	O	P	Ed	—	L	L	Master volume minimum control, L: Min.
74	PD1	SEL C (S)	I	—	Eu	Lv	Z	—	Surround mode rotation detect input (rotary encoder)
75	PD2	SEL D (S)	I	—	Eu	Lv	Z	—	Surround mode rotation detect input (rotary encoder)
76	PD3	SEL E (F)	I	—	Eu	Lv	Z	—	Input selector switch rotation detect input (rotary encoder)
77	PD4	SEL F (F)	I	—	Eu	Lv	Z	—	Input selector switch rotation detect input (rotary encoder)
78	Vkk	Vkk	—	—	—	—	—	—	GND fixed
79	P00/SCK1_		O	C	—	—	Z	L	
80	P01/SI1	RDS CE	O	C	—	—	Z	L	RDS data output (LC72720)

NOTE:

Pin No. : Terminal number of microcomputer.
Port Name : The name entered in the data sheet of microcomputer.
Symbol : Symbolized interface function.
I/O : Input or out of part.
"I" = Input port
"O" = Output port
Type : Composition of port in case of output port.
"C" = CMOS output
"N" = NMOS open drain output
"P" = PMOS open drain output
Op : Pull up/Pull down selection information.
"Iu" = Inner microcomputer pull up
"Id" = Inner microcomputer pull down
"Eu" = External microcomputer pull up
"Ed" = External microcomputer pull down
Det : Indicates judging state of input port. Level detection is "LV"; Edge detection is "Ed";
Detection by both shifting is "E&L"; Serial data detection is "S" (Serial data output is also "S").
Res : State at reset.
"H" = Outputs High Level at reset
"L" = Outputs Low Level at reset
"Z" = Becomes High impedance mode at reset
Ini : Initial output state.
Function : Function and logical level explanation of signals to be interface.

Downloaded from www.Manualslib.com manuals search engine

TMP93CS40F (AU: IC301)

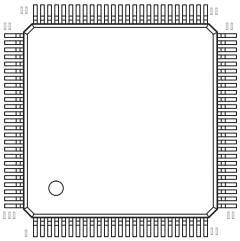

TMP93CS40F Terminal Function

Pin No.	Name	Symbol	I/O	Type	Op	Det	Res	Init	Function
1	V REFL		—	—	—	—	—	—	A/D ref. GND
2	A Vss	←	—	—	—	—	—	—	A/D GND
3	A Vcc	←	—	—	—	—	—	—	AD +5V
4	_NMI		I	—	—	—	—	—	Not used (fixed to H)
5	P70/TI0	C15	O	C	Ed	—	L	L	Fixed to L (DSP ROM address cont. out bit 15, not used)
6	P71/TO1	C16	O	C	Ed	—	L	L	DSP program ROM address cont. out bit 16
7	P72/TO2	C17	O	C	Ed	—	L	L	DSP program ROM address cont. out bit 17
8	P73/TO3	ROM/RAM	O	C	Ed	—	L	L	ROM/RAM switching control terminal (L:ROM)
9	P80/INT4/TI4	_INTREQ OUT	I/O	C	Eu	E↓&L	Z	—	DSP request input and cont. output (L:Rq & cont.)
10	P81/INT5/TI5	B.DOWN	I	—	Eu	E↑&L	Z	—	Power down detect (H: Detected)
11	P82/TO4		O	C	—	—	L	L	
12	P83/TO5	_REQ	O	C	Eu	—	H	L	MAIN-SUB CPU comm. control output (L: Comm. request from sub)
13	P84/INT6/TI6	_ACK	I	—	Eu	E↓&L	—	—	MAIN-SUB CPU comm. control input (L: Ack. return from main)
14	P85/INT7/TI7	ERR	I	—	—	E↑&L	—	—	DIR control input terminal (LC89055Q)(H: ERR)
15	P86/TO6		I	—	—	Lv	Z	—	(GND)
16	P97/INT0	_CS	I	—	Ed	E↑&L	—	—	DIR control input terminal (LC89055Q), when CH status change L→H
17	P90/TXD0	SI	O	C					MAIN-SUB CPU comm. control terminal (data output)
18	P91/RXD0	SO	I	—					MAIN-SUB CPU comm. control terminal (data input)
19	P92/_CTS0/SCLK0	CLK	I/O	C					MAIN-SUB CPU comm. control terminal (I2C clock in/output)
20	P93/TXD1		O	C	—	—	Z	L	
21	P94/RXD1		O	C	—	—	Z	L	
22	P95/SCLK1		O	C	—	—	Z	L	
23	AM8/_16	←	—	—	—	—	—	—	Fixed to +5V
24	CLK		O	C	Eu	—	—	—	
25	Vcc	←	—	—	—	—	—	—	+5V
26	Vss	I/O1	—	—	—	—	—	—	GND
27	X1	Xin	I	—	—	—	—	—	X'tal connection
28	X2	Xout	O	—	—	—	—	—	X'tal connection
29	_EA	←	—	—	—	—	—	—	Fixed to +5V
30	_RESET	RESET2_	I	—	Eu	Lv	L	—	Reset input (controlled by main CPU)
31	P96/XT1	A/D RESET	O	N	Eu	—	H	H	A/D control terminal (L: Reset)
32	P97/XT2		O	C	Ed	—	L	L	
33	TEST1	←	I	—	—	—	—	—	Connected to TEST2
34	TEST2	←	I	—	—	—	—	—	Connected to TEST1
35	PA0	DINA	O	C	Ed	—	L	L	Digital input switching control output
36	PA1	DINB	O	C	Ed	—	L	L	Digital input switching control output
37	PA2		O	C	—	—	L	L	
38	PA3	DINC	O	C	Ed	—	L	L	Digital input switching control output
39	PA4	DOUTA	O	C	Ed	—	L	L	Digital output switching control output
40	PA5	DOUTB	O	C	Ed	—	L	L	Digital output switching control output
41	PA6	DEEMP	O	C	Ed	—	L	L	DAC de-emphasis filter cont. out terminal (H:ON)
42	PA7/SCOUT	96k-DAC	O	C	—	—	L	L	DAC control terminal (H: Sample frequency 96kHz)
43	ALE		O	C	—	—	L	L	(Address latch enable)
44	Vcc		—	—	—	—	—	—	+5V
45	P00/AD0	(AD0)	I/O	C	—	—	Z	L	(EPROM data in D0 / address out A0)
46	P01/AD1	(AD1))	I/O	C	—	—	Z	L	(EPROM data in D1 / address out A1)
47	P02/AD2	(AD2)	I/O	C	—	—	Z	L	(EPROM data in D2 / address out A2)
48	P03/AD3	(AD3)	I/O	C	—	—	Z	L	(EPROM data in D3 / address out A3)
49	P04/AD4	(AD4)	I/O	C	—	—	Z	L	(EPROM data in D4 / address out A4)
50	P05/AD5	(AD5)	I/O	C	—	—	Z	L	(EPROM data in D5 / address out A5)
51	P06/AD6	(AD6)	I/O	C	—	—	Z	L	(EPROM data in D6 / address out A6)
52	P07/AD7	(AD7)	I/O	C	—	—	Z	L	(EPROM data in D7 / address out A7)
53	P10/AD8/A8	(A8)	O	C	—	—	Z	L	(EPROM address out A8)
54	P11/AD9/A9	(A9)	O	C	—	—	Z	L	(EPROM address out A9)
55	P12/AD10/A10	(A10)	O	C	—	—	Z	L	(EPROM address out A10)
56	P13/AD11/A11	(A11)	O	C	—	—	Z	L	(EPROM address out A11)
57	P14/AD12/A12	(A12)	O	C	—	—	Z	L	(EPROM address out A12)
58	P15/AD13/A13	(A13)	O	C	—	—	Z	L	(EPROM address out A13)
59	P16/AD14/A14	(A14)	O	C	—	—	Z	L	(EPROM address out A14)
60	P17/AD15/A15	(A15)	O	C	—	—	Z	L	(EPROM address out A15)
61	_WDTOUT	←	O	C	—	—	Z	H	Watch dog output
62	Vss	←	—	—	—	—	—	—	GND
63	Vcc	←	—	—	—	—	—	—	+5V
64	P20/A0/A16	(A16)	O	C	—	—	Z	L	(EPROM address out A16)
65	P21/A1/A17	DIR CLK	O	C	—	—	Z	L	DIR control terminal (LC89055Q) control clock output
66	P22/A2/A18	DIR CE	O	C	—	—	Z	L	DIR control terminal (LC89055Q) control chip enable output
67	P23/A3/A19	DIR MOSI	O	C	—	—	Z	L	DIR control terminal (LC89055Q) control data output
68	P24/A4/A20	DIR MOSO	I	—	—	Lv	—	—	DIR control terminal (LC89055Q) control data input
69	P25/A5/A21	FGAIN	O	C	Ed	—	L	L	FRONT ch GAIN switching control output (H: SW=NO)
70	P26/A6/A22	DAC-RESET	O	C	Ed	—	L	H	DAC control terminal (L: Power down mode, ↑(rising edge) Reset)
71	P27/A7/A23	SEL CK	O	C	—	—	Z	L	ADC/DIR data clock switching control terminal (L: ADC)
72	P30/_RD	(_RD)	O	C	—	—	Z	L	(Flash memory control terminal)
73	P31/_WR	(_WR)	O	C	—	—	Z	L	(Flash memory control terminal)
74	P32/_HWR	CSI	I	—	—	Lv	—	—	DIR control input terminal (L: PCM)
75	P33/_WAIT	ERR MUTE_	O	C	Ed	—	L	L	Pop noise preventive mute control output (L: Mute)
76	P34/_BUSRQ		I	—	—	Lv	Z	—	GND
77	P35/_BUSRQ	DIG.(AC3) MUTE	O	C	Ed	—	Z	L	Digital mute control output (L: AC-3 or DTS decode enable)
78	P36/_R/W		I	—	—	Lv	Z	—	GND
79	P37/_RAS	DIR RESET	O	C	—	—	Z	L	DIR control output (LC89055Q) (L: Reset)
80	P40/_CS0/_CAS0		O	C	—	—	Z	L	
81	P41/_CS1/_CAS1		O	C	—	—	Z	L	
82	P42/_CS2/_CAS2	(_CS0)	O	C	—	—	Z	L	(Flash memory control terminal)
83	P60/PG00	DSP. RESET	O	C	—	—	Z	L	DSP reset output terminal (L:Reset)
84	P61/PG01	I/02 SCD OUT	I	C	—	Lv	Z	—	DSP status data input terminal
85	P62/PG02	I/03 DSP. CS	O	—	—	—	Z	L	DSP chip select cont.output (L:Data out)
86	P63/PG03	I/04 DSP. CLK	O	C	—	—	Z	L	DSP data clock output terminal
87	P64/PG10	I/05 SCD IN	O	C	—	—	Z	L	DSP data output terminal
88	P65/PG11	I/06 4527_CE	O	C	—	—	Z	L	AD control terminal (AK4527), Chip enable output
89	P66/PG12	I/07 4527_CLK	O	C	—	—	Z	L	AD control terminal (AK4527), Data clock output
90	P67/PG13	I/08 4527_DIN	O	C	—	—	Z	L	AD control terminal (AK4527), Data output
91	Vss	←	—	—	—	—	—	—	GND
92	P50/AN0	INTTREQ IN	I	—	Eu	Lv	Z	—	
93	P51/AN1		I	—	Eu	Lv	Z	—	
94	P52/AN2	EMP	I	—	—	Lv	—	—	H: EMP on
95	P53/AN3	96K DET	I	—	—	Lv	—	—	96k signal detect input, H: 96k
96	P54/AN4		I	—	Eu	Lv	—	Z	
97	P55/AN5		I	—	Eu	Lv	—	Z	
98	P56/AN6	ACC ON/OFF	I	—	Eu	Lv	—	Z	
99	P57/AN7		I	—	Eu	Lv	—	Z	
100	V REFH	←	—	—	—	—	—	—	AD ref. +5V

Downloaded from www.Manualslib.com manuals search engine

CS493292-CL (AU: IC814)

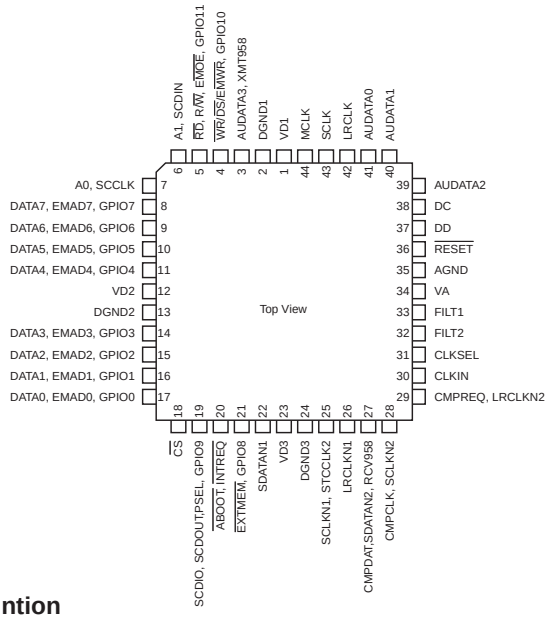

● CS493292-CL Terminal Funtion

Pin No.	Port Name	Function
1,12,23	VD1,2,3	Digital power supply (+)
2,13,24	DGND1,2,3	Digital GND
3	AUDATA3, XMT958	SPDIF transmitter output, Digital audio output 3
4	$\overline{WR}$, $\overline{DS}$, $\overline{EMWR}$, GPIO10	Host write strobe, Host data strobe, External memory write enable, General purpose in/output 10
5	$\overline{RD}$, R/$\overline{W}$, $\overline{EMOE}$,GPIO11	Host parallel output enable, Host parallel R/$\overline{W}$, External memory write enable, General purpose in/output 11
6	A1,SCDIN	Host address bit 1, SPI serial control data input
7	A0,SCCLK	Host address bit 0, Serial control port clock
8	DATA7, EMAD7, GPIO7	Bidirectional data bus 7, External memory address 7, General purpose in/output 7
9	DATA6, EMAD6, GPIO6	Bidirectional data bus 6, External memory address 6, General purpose in/output 6
10	DATA5, EMAD5, GPIO5	Bidirectional data bus 5, External memory address 5, General purpose in/output 5
11	DATA4, EMAD4, GPIO4	Bidirectional data bus 4, External memory address 4, General purpose in/output 4
14	DATA3, EMAD3, GPIO3	Bidirectional data bus 3, External memory address 3, General purpose in/output 3
15	DATA2, EMAD2, GPIO2	Bidirectional data bus 2, External memory address 2, General purpose in/output 2
16	DATA1, EMAD1, GPIO1	Bidirectional data bus 1, External memory address 1, General purpose in/output 1
17	DATA0, EMAD0, GPIO0	Bidirectional data bus 0, External memory address 0, General purpose in/output 0
18	$\overline{CS}$	Host parallel chip select, Host serial SPI chip select
19	SCDIO, SCDOUT, PSEL,GPIO9	Serial control port data in/output, Parallel port type select, General purpose in/output 9
20	$\overline{INTREQ}$, $\overline{ABOOT}$	Control port interrupt request, Automatic boot enable
21	$\overline{EXTMEM}$, GPIO8	External memory chip select, General purpose in/output 8
22	SDATAN1	PCM audio data input 1
25	SCLKN1, STCCLK2	PCM audio input bit clock
26	LRCLKN1	PCM audio input sample rate clock
27	CMPDAT, SDATAN2	PCM audio data input 2
28	CMPCLK, SCLKN2	PCM audio input bit clock
29	CMPREQ, LRCLKN2	PCM audio input sample rate clock
30	CLKIN	Master clock input
31	CLKSEL	DSP clock select
32	FILT2	PLL filter
33	FILT1	PLL filter
34	VA	Analog power supply (+)
35	AGND	Analog GND
36	$\overline{RESET}$	Master reset input
37	DD	Reserved
38	DC	Reserved
39	AUDATA2	Digital audio output 2
40	AUDATA1	Digital audio output 1
41	AUDATA0	Digital audio output 0
42	LRCLK	Audio output sample rate clock
43	SCLK	Audio output bit clock
44	MCLK	Audio master clock

Downloaded from www.Manualslib.com manuals search engine

LC89055W (AU: IC800)

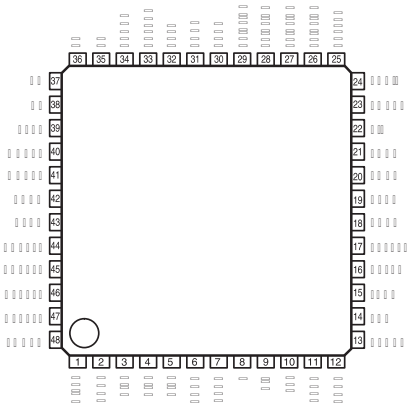

LC89055W Terminal Function

Pin No.	Pin Name	I/O	Function
1	DISEL	I	Data input terminal (select input pin of DIN0, DIN1)
2	DOUT	O	Input bi-phase data through output terminal
3	DIN0	I	Amp built-in coaxial/optical input correspond data input terminal
4	DIN1	I	Amp built-in coaxial/optical input correspond data input terminal
5	DIN2	I	Optical input correspond data input terminal
6	DGND		Digital GND
7	DVDD		Digital power supply
8	R	I	VCO gain control input terminal
9	VIN	I	VCO free-run frequency setting input terminal
10	LPF	O	PLL loop filter setting terminal
11	AVDD		Analog power supply
12	AGND		Analog GND
13	CKOUT	O	Clock output terminal (256fs, 384fs, 512fs, X′tal osc., VCO free-run osc.)
14	BCK	O	64fs clock output terminal
15	LRCK	O	fs clock output terminal (L: Rch, H: Lch, I²S: Reverse)
16	DATAO	O	Data output terminal
17	XSTATE	O	Input data detecting result output terminal
18	DGND		Digital GND
19	DVDD		Digital power supply
20	XMCK	O	X′tal osc. clock output terminal (24.576MHz or 12.288MHz)
21	XOUT	O	X′tal osc. connection output terminal
22	XIN	I	X′tal osc. connection input terminal, external signal input possible (24.576MHz or 12.288MHz)
23	EMPHA	O	Emphasis information output terminal of channel status
24	AUDIO	O	Bit1 output terminal of channel status
25	CSFLAG	O	Top 40bit revise flag output terminal of channel status
26	F0/P0/C0	O	Input fs cal. sig. out / data type out / input word inf. output terminal
27	F1/P1/C1	O	Input fs cal. sig. out / data type out / input word inf. output terminal
28	F2/P2/C2	O	Input fs cal. sig. out / data type out / input word inf. output terminal
29	VF/P3/C3	O	Validity flag out / data type out / input word inf. output terminal
30	DVDD		Digital power supply
31	DGND		Digital GND
32	AUTO	O	Non PCM burst data transfer detect sig. output terminal
33	BPSYNC	O	Non PCM burst data preamble Pa, Pb, Pc, Pd sync sig. output terminal
34	ERROR	O	PLL lock error, data error flag output terminal
35	DO	O	CPU I/F read data output terminal
36	DI	I	CPU I/F write data input terminal
37	CE	I	CPU I/F chip enable input terminal
38	CL	I	CPU I/F clock input terminal
39	XSEL	I	Frequency select input pin of XIN X′tal osc. (24.576MHz or 12.288MHz)
40	MODE0	I	Mode setting input terminal
41	MODE1	I	Mode setting input terminal
42	DGND		Digital GND
43	DVDD		Digital power supply
44	DOSEL0	I	Data output format select input terminal
45	DOSEL1	I	Data output format select input terminal
46	CKSEL0	I	Output clock select input terminal
47	CKSEL1	I	Output clock select input terminal
48	XMODE	I	Reset input terminal

* For latch-up countermeasure, set digital (DVDD) and analog (AVDD) power on/off in the same timing.

Downloaded from www.Manualslib.com manuals search engine

M35015-210SP (AU: IC453)

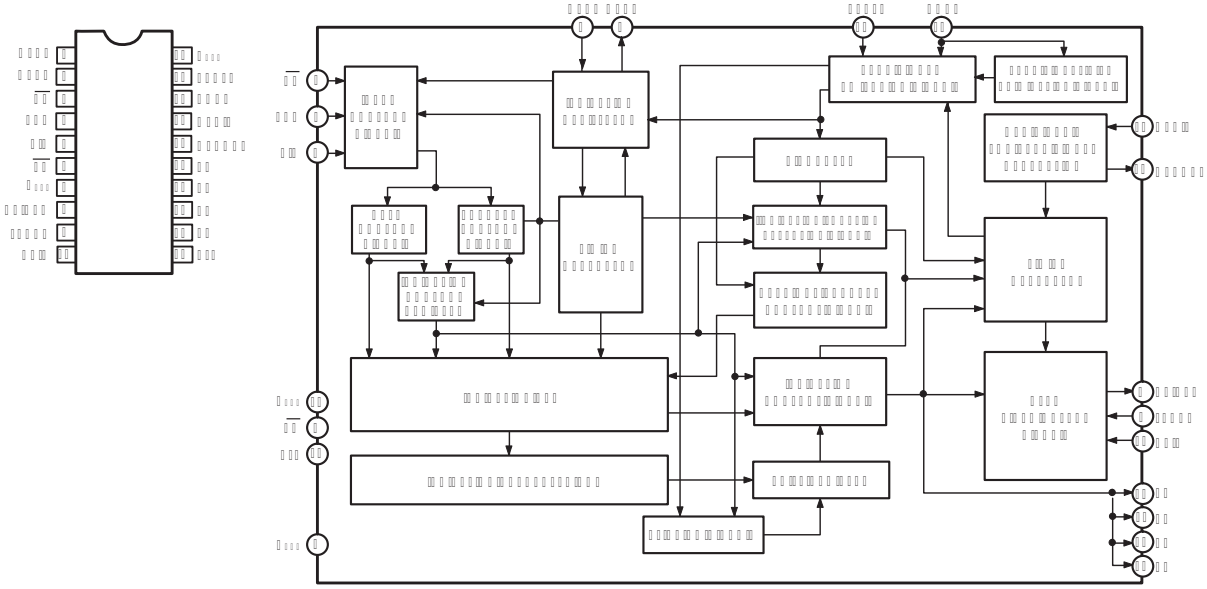

M35015-210SP Terminal Function

Pin No.	Symbol	Name	I/O	Function
1	OSC1	Osc. circuit ext. terminal.	I	External terminal for indication oscillator circuit. Standard OSC. freq. is approx. 7MHz.
2	OSC2		O	With this OSC. freq., decides horizontal indicatin and character width.
3	$\overline{CS}$	Chip select input	I	Chip select terminal and turns to “L” when transfer serial data. Hysteresis input. Pull up resistor is built-in.
4	SCK	Serial clock input	I	Takes in serial data of SIN at SCK rise when CS terminal is in “L”. Hysteresis input. Pull up rersist is built-in.
5	SIN	Serial data input	I	Serial input of register for indication control and data, and address for indication data memory. Hysteresis input. Pull up rersistor is built-in.
6	$\overline{AC}$	Auto-clear input	I	Resets internal circuit of IC at “L” mode. Hysteresi input. Pull up resistor is built-in.
7	V_{DD2}	Power supply	—	Power supply terminal of analog system. Connect to +5V.
8	CVIDEO	Combined video output	O	Output terminal of combined video signal. Outputs 2Vp-p combined signal. Character output, etc. Overlap CVIN signal and outputs at superimpose.
9	LECHA	Character level input	I	Input terminal deciding character output level in combined video signal. color of character is white.
10	CVIN	Combined video input	I	Input terminal of external combined video signal. Character output etc. overlap this external combined video signal.
11	Vss	Ground	—	Ground terminal. Connect to GND.
12	P0	Output port p0	O	General output or character background signal BL NK1* output is switchable. Polarity can be selected at ROM mask.
13	P1	Output port P1	O	General output or character background signal CO1* output is switchable. Polarity can be selected at ROM mask.
14	P2	Output port P2	O	General output or character background signal BLNK2* output is switchable. Polarity can be selected at ROM mask.
15	P3	Output port P3	O	General output or character background signal CO2* output is switchable. Polarity can be selected at ROM mask.
16	OSCOUT	Ext. terminal for sync sig. OSC. Circuit	O	Terminal for external use of sync signal OSC. circuit. Use the freq.: 14.32MHz at NTSC system, 17.73MHz at PAL. system, 14.30MHz at MPAL system.
17	OSCIN		I	
18	HOR*	Horizontal sync signal	I	Inputs horizontal sync signal. Hysteresis input.
19	VERT*	Vertical sync signal	—	Input vertical sync signal. Hysteresis input. Polarity can be selected at ROM mask.
20	V_{DD1}	Power supply	I	Power supply terminal of digital system. Connect to +5V.

Downloaded from www.Manualslib.com manuals search engine

AK4527BVQ (AU:IC602)

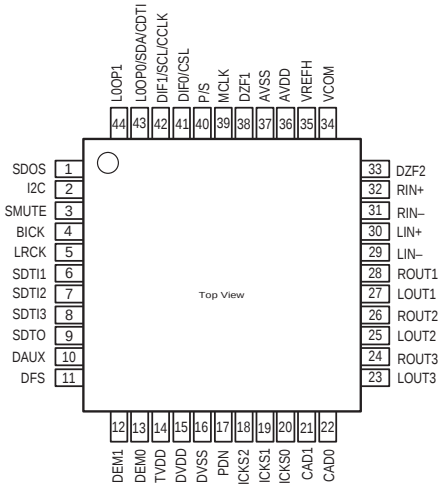

AK4527BVQ Terminal Function

Pin No.	Pin Name	I/O	Function
1	SDOS	I	SDTO source select pin, L: Internal ADC output, H: DAUX input
2	I2C	I	Serial control mode select pin, L: 3-core serial, H: I^2C bus
3	SMUTE	I	Soft mute pin, H: Soft mute start, L: Release
4	BICK	I	Audio serial data clock pin
5	LRCK	I	Input channel clock pin
6	SDTI1	I	DAC1 audio serial data input pin
7	SDTI2	I	DAC2 audio serial data input pin
8	SDTI3	I	DAC3 audio serial data input pin
9	SDTO	O	Audio serial data output pin
10	DAUX	I	Auxiliary audio serial data input pin
11	DFS	I	Double speed sampling mode pin, L: Normal, H: Double
12	NC	—	No Connect, No internal bonding
13	DZFE	I	Zero input detect enable pin
14	TVDD	—	Power pin for output buffer, 2.7V~5.5V
15	DVDD	—	Digital power pin, 4.5V~5.5V
16	DVss	—	Digital GND pin, 0V
17	PDN	I	Power down & reset pin, L: Powered-down and register initialized, Reset with PDN when switching CAD0-1
18	TST	I	Test pin, connected to DVSS
19	NC	—	No Connect, No internal bonding
20	ADIF	I	Analog Input Format Select pin
21	CAD1	I	Chip address-1 pin
22	CAD0	I	Chip address-0 pin
23	LOUT3	O	DAC3L channel analog out pin
24	ROUT3	O	DAC3R channel analog out pin
25	LOUT2	O	DAC2L channel analog out pin
26	ROUT2	O	DAC2R channel analog out pin
27	LOUT1	O	DAC1L channel analog out pin
28	ROUT1	O	DAC1R channel analog out pin
29	LIN-	I	L-ch analog inverted input pin
30	LIN+	I	L-ch analog non-inverted input pin
31	RIN-	I	R-ch analog inverted input pin
32	RIN+	I	R-ch analog non-inverted input pin
33	DZF2/OVF	O	0 input detect 2 pin/Analog input overflow detect pin
34	VCOM	O	Common V-out pin, AVDD/2, connect large capacitor to avoid noise
35	VREFH	I	Ref. V input pin, AVDD
36	AVDD	—	Analog GND pin, 4.5V~5.5V
37	AVss	—	Analog GND pin, 0V
38	DZF1	O	0 input detect pin, H: Input data of G1 is 8192 times “0” in a raw or RSTN bit “0”, L: When P/S= “0”
39	MCLK	I	Master clock input pin
40	P/S	I	Parallel/Serial select pin, L: Serial control
41	DIF0	I	Audio data I/F format 0 pin (parallel control)
	CSN	I	Chip select pin (3-wire serial control), connect to DVDD when I^2C bus control
42	DIFI	I	Audio data I/F format 1 pin (parallel control)
	SCL/CCLK	I	Control data clock pin (serial control), I^2C=”L”: CCLK (3-wire serial), I^2C=”H”: SCL (I^2C bus)
43	LOOP0	I	Loop back mode 0 pin (parallel control), effects digital loop back ADC to all DAC
	SDA/CDTI	I/O	Control data input pin (serial control), I^2C=”L”: CCTI (3-wire serial), I2C=”H” SDA (I^2C bus)
44	LOOP1	I	Loop back mode 1 pin, from SDT1 to all DAC

Downloaded from www.Manualslib.com manuals search engine

BU4094BCF (CO: IC304,305)

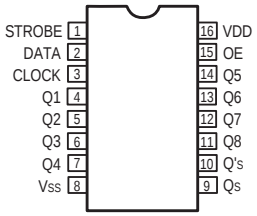

CO: IC304

Port	Symbol	Function
Q1	A	Video input switching
Q2	B	Video input switching
Q3	C	Video input switching
Q4	D	Video output switching
Q5	E	Video output switching
Q6	F	Video output switching
Q7	H	Video output switching
Q8	G	Video output switching

CO: IC305

Port	Symbol	Function
Q1	DIRECT/TONE DEFEAT	DIRECT & TONE DEFEAT relay control (H:DIRECT,TONE DEFEAT)
Q2	S1	Video signal switching control output
Q3	S2	Video signal switching control output
Q4	EXT. IN	Sub woofer channel gain control terminal (L:EXT. IN)
Q5	D	Video output switching
Q6	G	Video output switching
Q7	NC	
Q8	FRONT A+B	Current limiter control terminal (H:Front SP A+B)

LC75721E (CO: IC101)

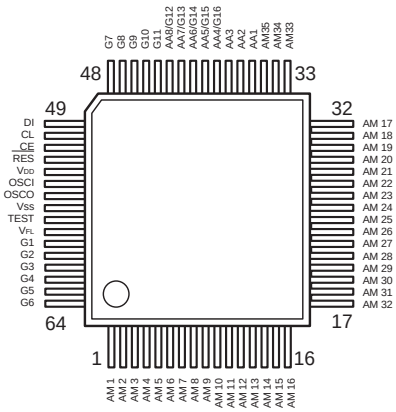

LC75721E Terminal Function

Symbol	Function
V_{DD}	Power terminal +5V
Vss	Power terminal GND
V_{FL}	Power terminal FL drive
DI CL CE	Serial data transfer terminal DI: Data CL: Clock CE: Chip enable
OSCI OSCO	External CR connecting terminal
$\overline{RES}$	System reset terminal
AM1~AM35 AA1~AA3	Anode output terminal
AA4/G16 AA5/G15 AA6/G14 AA7/G13 AA8/G12	Anode/Grid output terminal
G1~G11	Grid output terminal
TEST	LSI test terminal

BU2090F (CO: IC103)

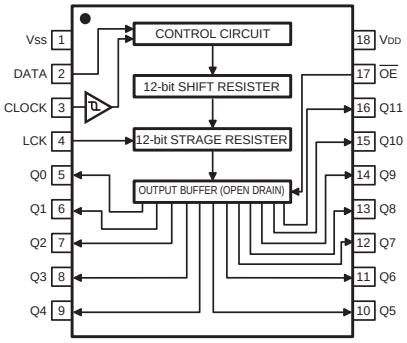

TC9274N-011 (AU: IC107)

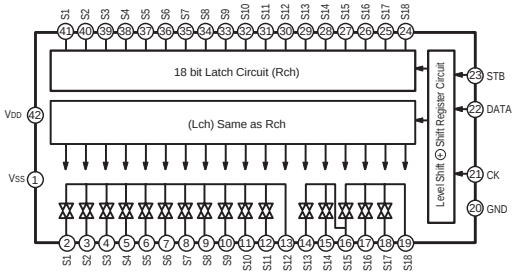

TC9274N-017 (EX: IC312)

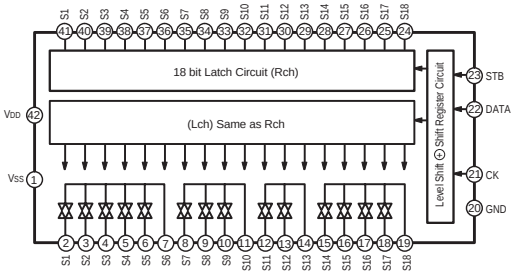

Downloaded from www.Manualslib.com manuals search engine

TC9273N-004 (AU: IC108)

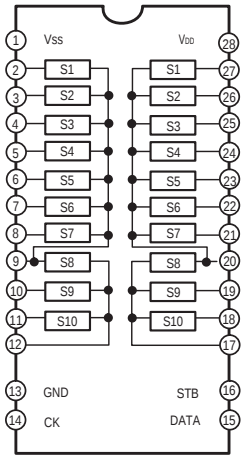

TC9273N Terminal Function

Pin No	Symbol	Name	Function	
1	Vss	+Power Terminal	Dual Power Use:VDD = 8.0~17 V GND=0V Vss=-8.0~-17V Single Power Use:VDD = 8.0~18V GND=0V	
13	GND	Digital Ground		
28	VDD	+Power Terminal		
2~12 12~27	S1~S10	I/O Terminal	Input terminal of analog switch.	
14	CK	Clock Input	Clock input for data transfer.	Low level Border Input Terminal
15	DATA	Data Input	Serial input for switch setting.	
16	STB	Strobe Input	Strobe InputStrobe input for data writing.	

NJM2229S (AU: IC452)

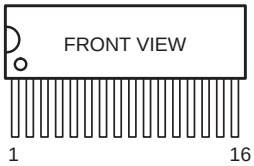

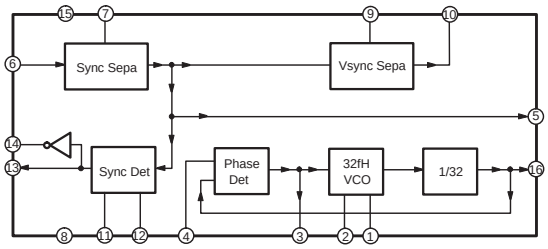

AD1854 (AU: IC601)

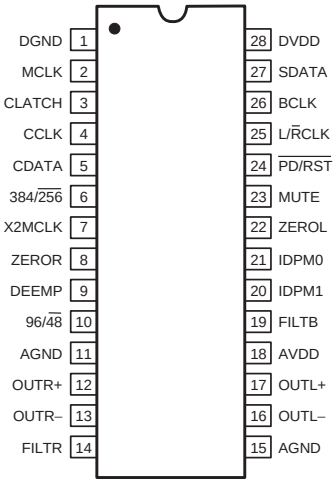

Terminal Function

No.	Name	I/O	Function
1	DGND	I	Digital Ground.
2	MCLK	I	Master Clock Input
3	CLATCH	I	Latch input for control data
4	CCLK	I	Control clock input for control data
5	CDATA	I	Serial control input
6	384/256	I	Selects the master clock mode
7	X2MCLK	I	Selects internal clock doubler (LO) or internal clock=MCLK (HI)
8	ZEROR	O	Right Channel Zero Flag Output
9	DEEMP	I	De-Emphasis
10	96/48	I	Selects 48kHz (LO) or 96kHz Sample Frequency Control
11,15	AGND	I	Analog Ground
12	OUTR+	O	Right Channel Positive line level analog output
13	OUTR-	O	Right Channel Negative line level analog output
14	FILTR	O	Voltage Reference Filter Capacitor Connection
16	OUTL-	O	Left Channel Negative line level analog output
17	OUTL+	O	Left Channel Positive line level analog output
18	AVDD	I	Analog Power supply
19	FILTB	O	Filter Capacitor connection
20	IDPM1	I	Input serial data port mode control one
21	IDPM0	I	Input serial data port mode control zero
22	ZEROL	O	Left Channel Zero Flag output
23	MUTE	I	Mute. Assert HI to mute both stereo analog output
24	PD/RST	I	Power-Down/Reset
25	L/R CLK	I	Left/Right clock input for input data
26	BCLK	I	Bit clock input for input data
27	SDATA	I	Serial input
28	DVDD	I	Digital Power Supply

Downloaded from www.Manualslib.com manuals search engine

SN74LV244APW (AU: IC818, 825)

TOP VIEW

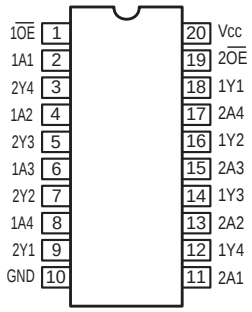

FUNCTION TABLE
(each buffer)

INPUT		OUTPUT
$\overline{OE}$	A	Y
L	H	H
L	L	L
H	X	Z

BU4053BCF (AU:IC256)
MM74HC4053SJ (AU: IC451)

TOP VIEW

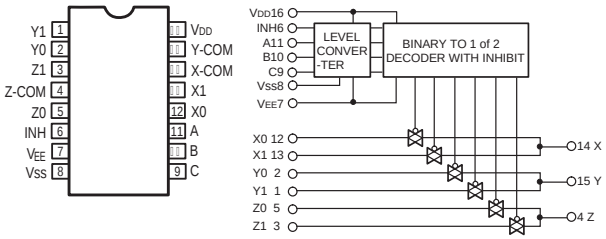

TC9459N
(EX: IC805)

TOP VIEW

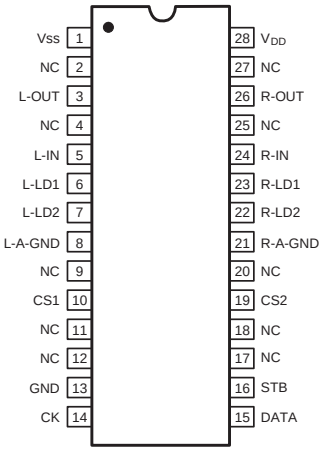

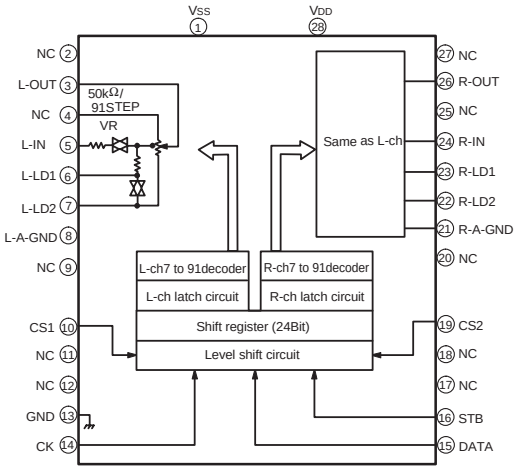

TC9482N
(EX: IC809)

TOP VIEW

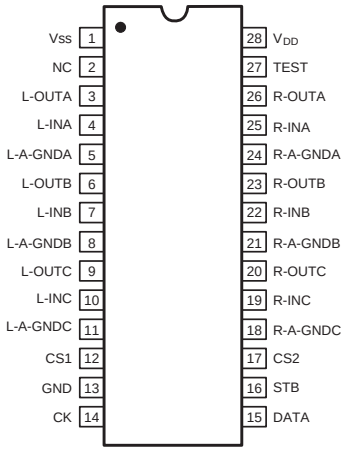

TC9184AP (EX: IC102)

TOP VIEW

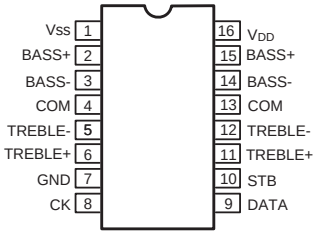

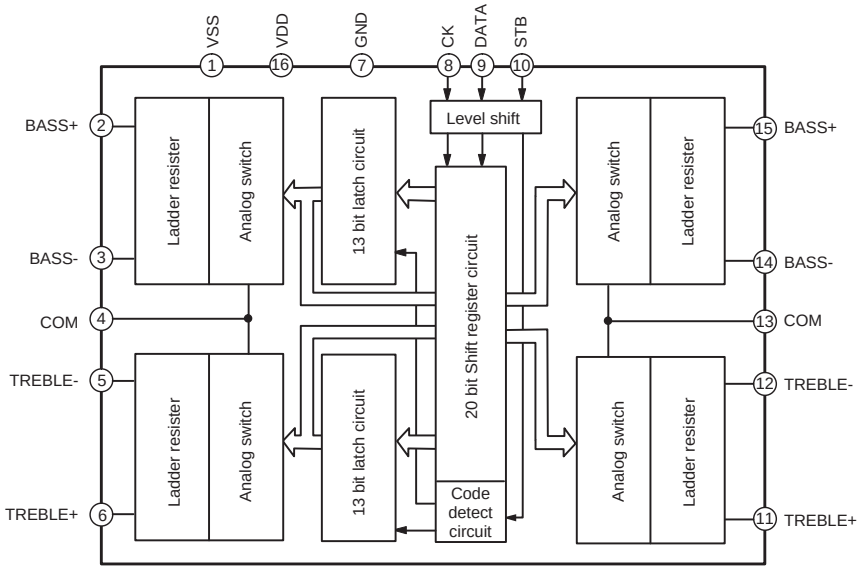

Downloaded from www.Manualslib.com manuals search engine

BU4052BCF (AU:IC255,509,510)

TOP VIEW

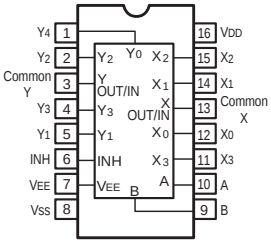

FUNCTION TABLE

INH	A	B	ON SWITCH
L	L	L	X_0 Y_0
L	H	L	X_1 Y_1
L	L	H	X_2 Y_2
L	H	H	X_3 Y_3
H	X	X	NONE

X:Don't Care

AT49LV002T (AU:IC817)

TOP VIEW

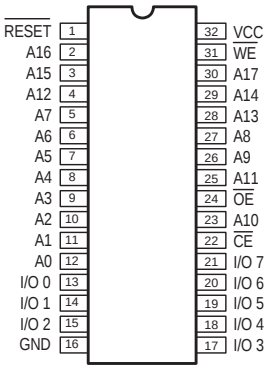

FUNCTION TABLE

Pin Name	Function
A0 - A17	Addresses
$\overline{CE}$	Chip Enable
$\overline{OE}$	Output Enable
$\overline{WE}$	Write Enable
$\overline{RESET}$	RESET
I/O0 -I/O7	Data Inputs/Outputs
DC	Don't Connect

SN74AHC574PW (AU: IC815, 816)

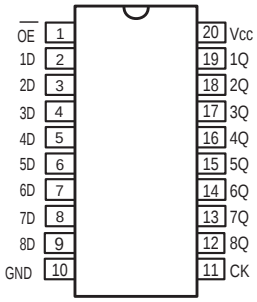

logic symbol

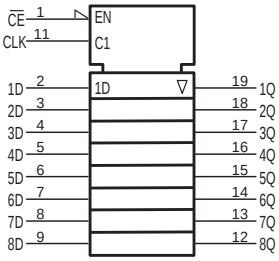

SN74HC151NS (EX:IC505,506)

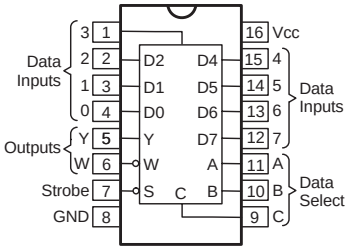

BU4051BCF (AU:IC251,252,504~507)

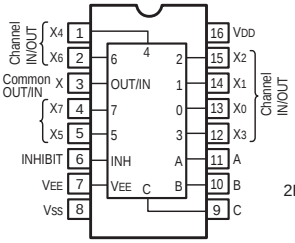

TC74VHC123AF (AU: IC801)

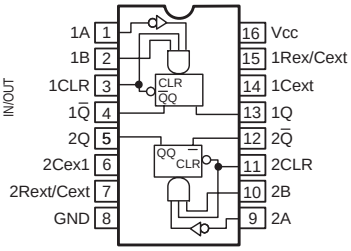

74LVX157 (AU: IC804)

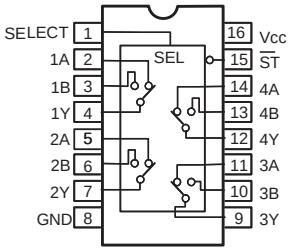

TC74HCU04AF (EX:IC504)

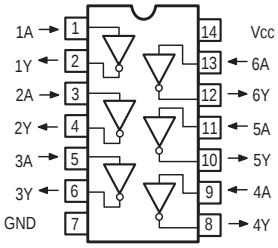

SN74LV00APW (AU: IC807)

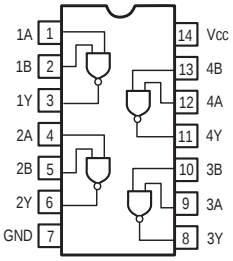

SN74LV14APW (AU: IC809)

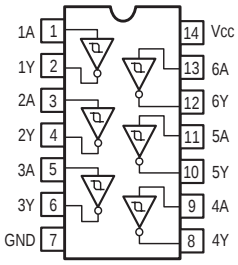

SN74LV4040APW (AU: IC813)

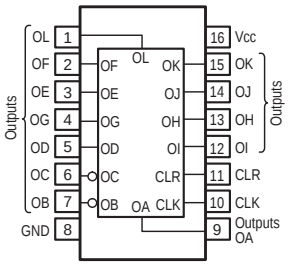

TC74HCT7007AF (AU:IC823)

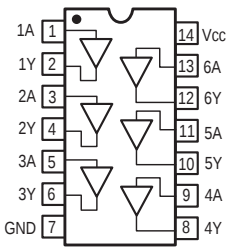

Downloaded from www.Manualslib.com manuals search engine

BA033T (AU: IC819)
KIA7805API (RE: IC901, 902, 907)
KIA7806API (PO: IC501)
KIA7812API (RE: IC905)

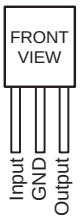

KIA7905PI (RE: IC909)
KIA7912PI (RE: IC906)

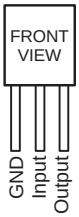

BA15218F (AU: IC112)
BA4510F (AU: IC811, 812)
NJM2068MD (EX: IC103, 301, 302, 308~310, 701, 801~804) (AU: IC109, 701, 721, 741, 761)
TK15420MTL (AU: IC253, 254, 257, 501~503, 508, 511)

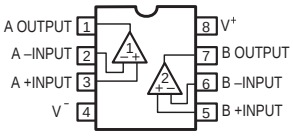

LC72720NM (CO: IC105)
Europe Model Only

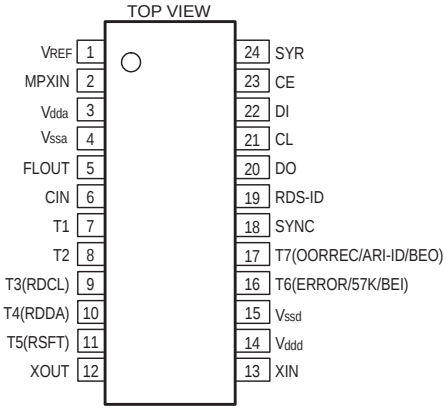

NJM2391DL1 (AU: IC824)

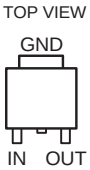

□ OPTICAL

INPUT
GP1FA551RZ (EX:IC501~503)

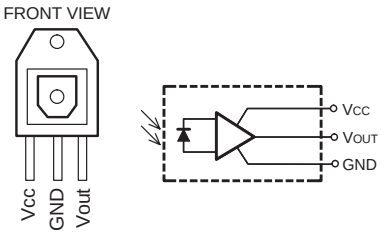

OUTPUT
GP1FA551TZ(EX:IC707)

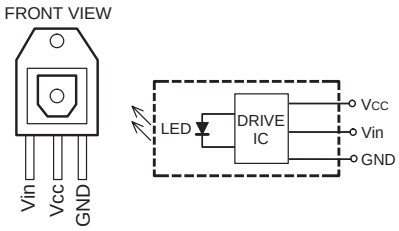

□ IC PROTECTOR

ICP-N15 (PO: IC502)

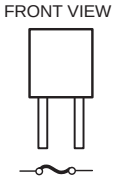

□ OTHERS

GP1U27X (Remote Control Sensor)
(CO: IC102)

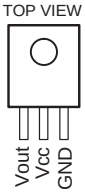

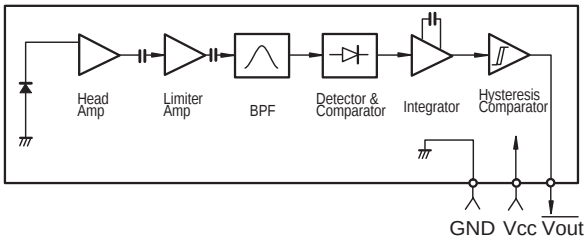

Downloaded from www.Manualslib.com manuals search engine

TRANSISTORS

2SA970 (BL)
2SA988 (E/F)
2SA933S (S)
2SA1145 (O/Y)
2SC1740S (S)
2SC2705 (O/Y)
2SC3311A
2SD2144STPU
KTA1266 (GR)
KTC2874B
2SC/KTC3200(BL)

2SA1505Y
2SC2412K (S)
2SD601A
KTC2875B

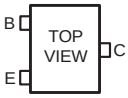

2SB/KTB778 (R/O)

2SK771

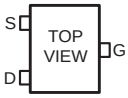

DTA114EK
DTA114TK
DTA144EK
DTC114EK
DTC143EK
DTC144EK
DTC323TK

DTC114ES

DTA114TK
DTA114EK
DTA144EK

PNP Type

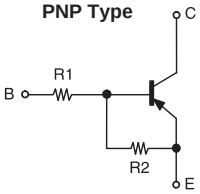

	R1	R2
DTA114EK	10kohm	10kohm
DTA114TK	10kohm	
DTA144EK	47kohm	47kohm

DTC114EK
DTC114ES
DTC143EK
DTC144EK
DTC323TK

NPN Type

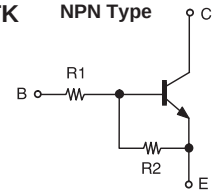

	R1	R2
DTC114EK	10kohm	10kohm
DTC114ES	10kohm	10kohm
DTC143EK	4.7kohm	4.7kohm
DTC144EK	47kohm	47kohm
DTC323TK	2.2kohm	

MP15P

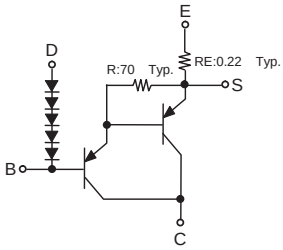

MN15N

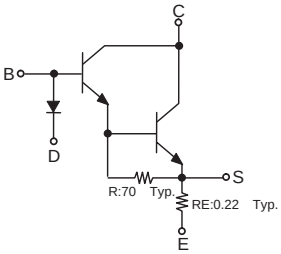

DIODES (included LED)

1SR35-400A
1SS270A
RB721Q-40

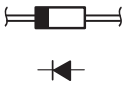

HZS3C-2
HZS5C-1
HZS6A-1
HZS6A-2
HZS7B-2
HZS9B-1
HZS33-2
MTZJ18A

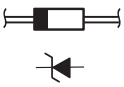

DAN202K

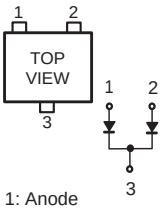

1: Anode
2: Anode
3: Cathode

DAP202K

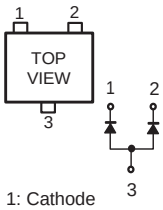

1: Cathode
2: Cathode
3: Anode

S4VB20
S4VB20F

TOP VIEW

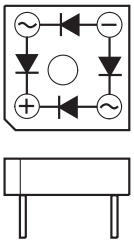

SEL1210S (Red)
SEL1410E (Green)

TOP VIEW

Downloaded from www.Manualslib.com manuals search engine

FL DISPLAY

CM1690C (CO: FL101)

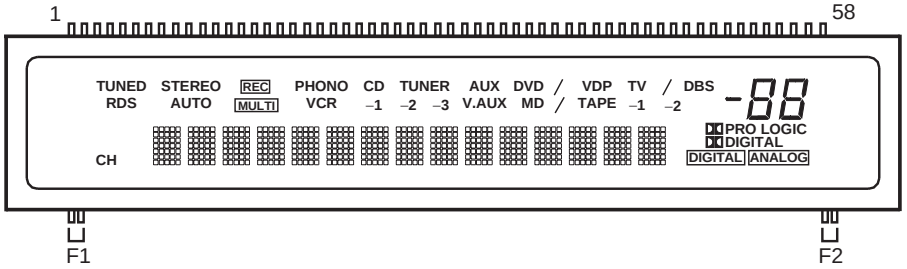

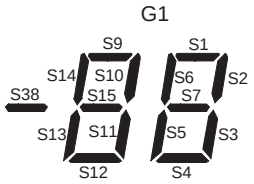

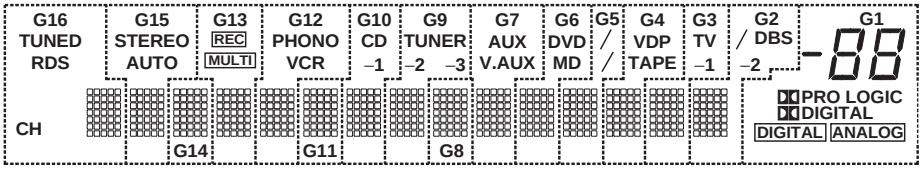

G2~G16

S1	S2	S3	S4	S5
S6	S7	S8	S9	S10
S11	S12	S13	S14	S15
S16	S17	S18	S19	S20
S21	S22	S23	S24	S25
S26	S27	S28	S29	S30
S31	S32	S33	S34	S35

Pin Assignment

PIN NO.	1	2	3	4	5	6	7	8	9	10	11	12	13	14	15	16	17	18	19	20
CONNECTION	F1	F1	S1	S2	S3	S4	S5	S6	S7	S8	S9	S10	S11	S12	S13	S14	S15	S16	S17	S18
PIN NO.	21	22	23	24	25	26	27	28	29	30	31	32	33	34	35	36	37	38	39	40
CONNECTION	S19	S20	S21	S22	S23	S24	S25	S26	S27	S28	S29	S30	S31	S32	S33	S34	S35	S36	S37	S38
PIN NO.	41	42	43	44	45	46	47	48	49	50	51	52	53	54	55	56	57	58		
CONNECTION	G16	G15	G14	G13	G12	G11	G10	G9	G8	G7	G6	G5	G4	G3	G2	G1	F2	F2		

F1,F2 : Filament
G1~G16 : Grid
S1~S38 : Anode

Anode & Grid Assignment

	G1	G2~G16		G1	G2~G16		G1	G2~G16		G1	G2~G16
S1	S1	S1	S10	S10	S10	S19	——	S19	S28	——	S28
S2	S2	S2	S11	S11	S11	S20	——	S20	S29	——	S29
S3	S3	S3	S12	S12	S12	S21	——	S21	S30	——	S30
S4	S4	S4	S13	S13	S13	S22	——	S22	S31	——	S31
S5	S5	S5	S14	S14	S14	S23	——	S23	S32	——	S32
S6	S6	S6	S15	S15	S15	S24	——	S24	S33	——	S33
S7	S7	S7	S16	——	S16	S25	——	S25	S34	——	S34
S8		S8	S17	DIGITAL	S17	S26	——	S26	S35	——	S35
S9	S9	S9	S18	PRO LOGIC	S18	S27	——	S27			

	G1	G2	G3	G4	G5	G6	G7	G8	G9	G10	G11	G12	G13	G14	G15	G16
S36	DIGITAL	/	TV	VDP	/(DVD)	DVD	AUX	——	TUNER	CD	——	PHONO	REC	——	STEREO	TUNED
S37	ANALOG	–2	–1	TAPE	/(MD)	MD	V.AUX	——	–2	–1	——	VCR	MULTI	——	AUTO	RDS
S38	S38	DBS	——	——	——	——	——	——	–3	——	——	——	——	——	——	CH

Downloaded from www.Manualslib.com manuals search engine

PRINTED WIRING BOARDS

1U-3368 POWER P.W.B. Ass'y

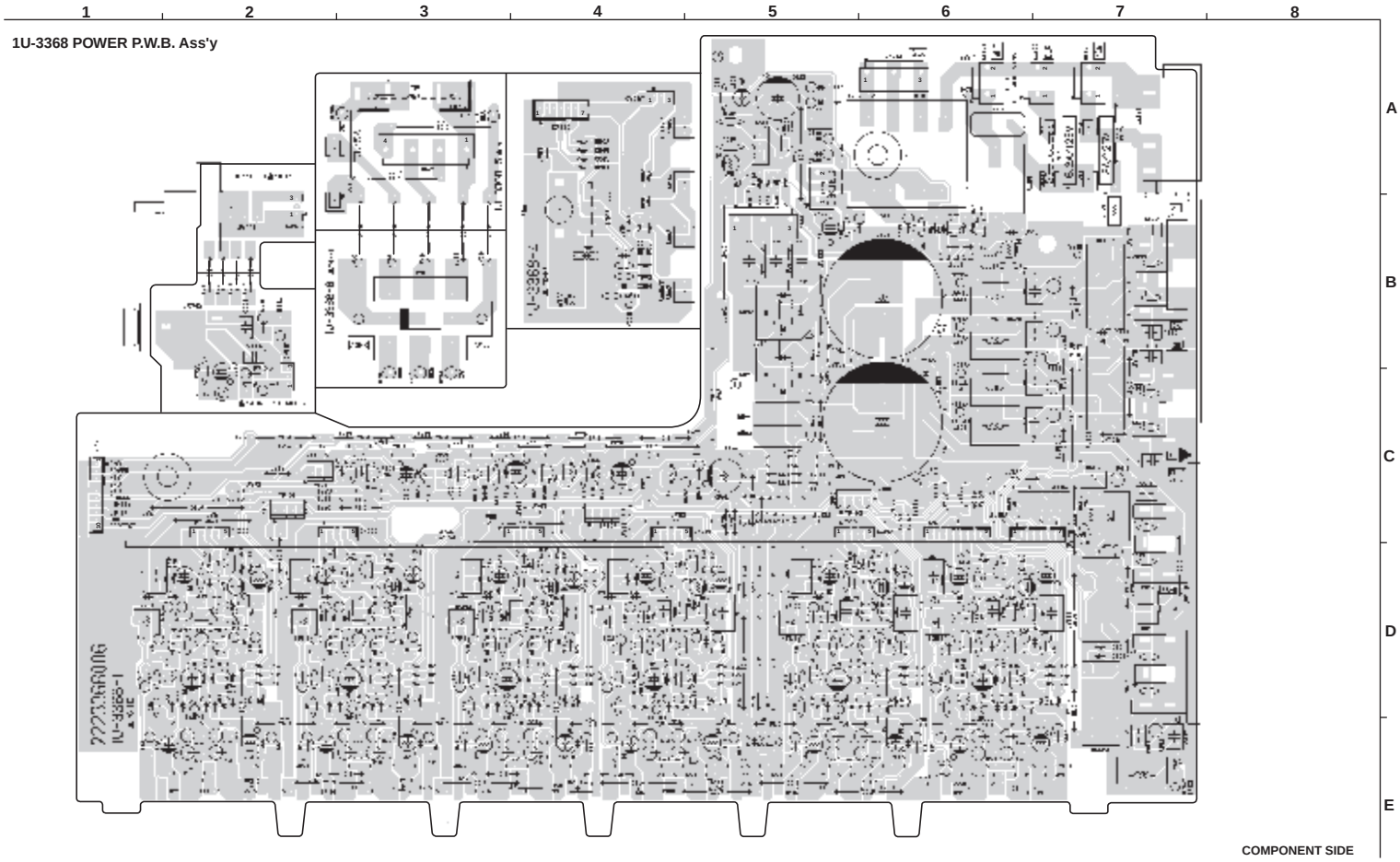

COMPONENT SIDE

Downloaded from www.Manualslib.com manuals search engine

1U-3369 EXT IN P.W.B. Ass'y

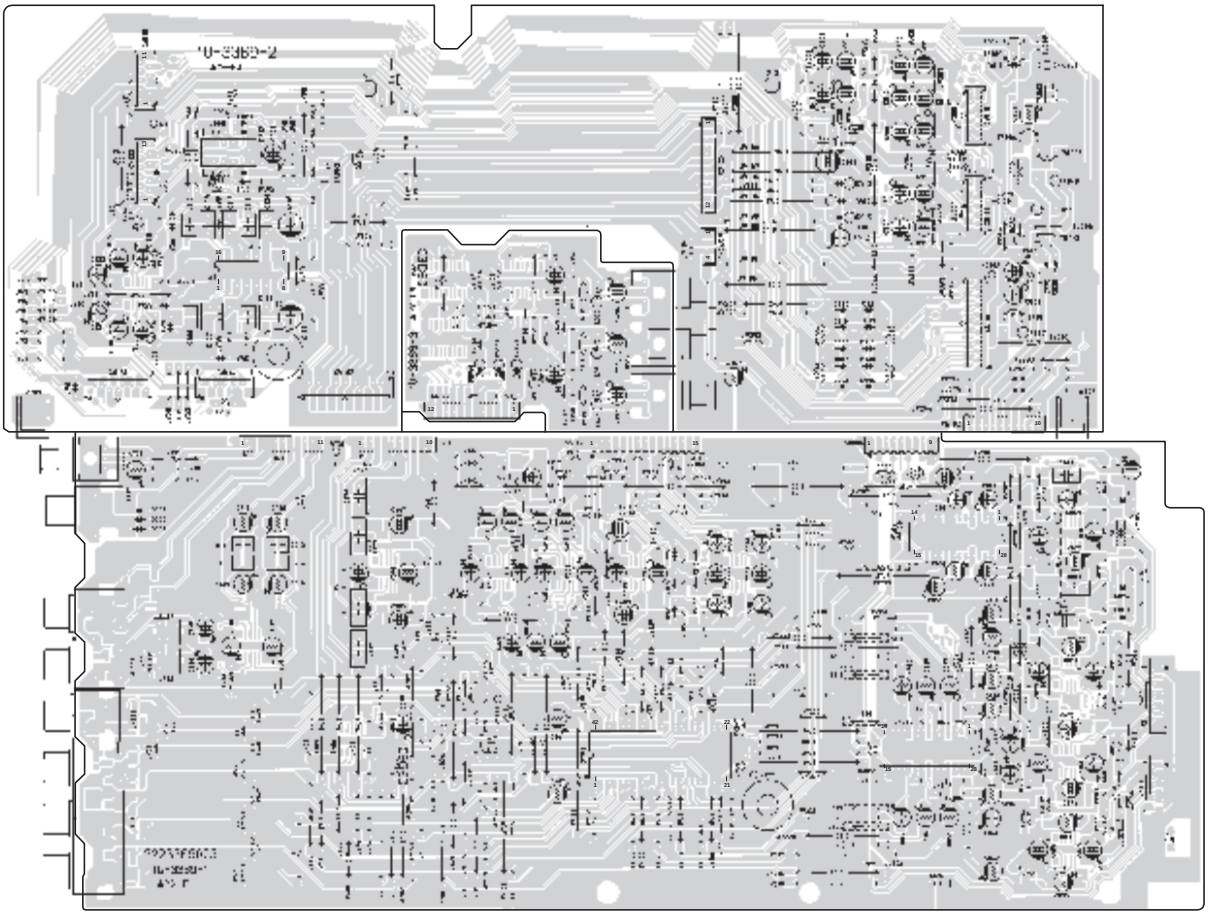

COMPONENT SIDE

Downloaded from www.Manualslib.com manuals search engine

1U-3369 EXT IN P.W.B. Ass'y

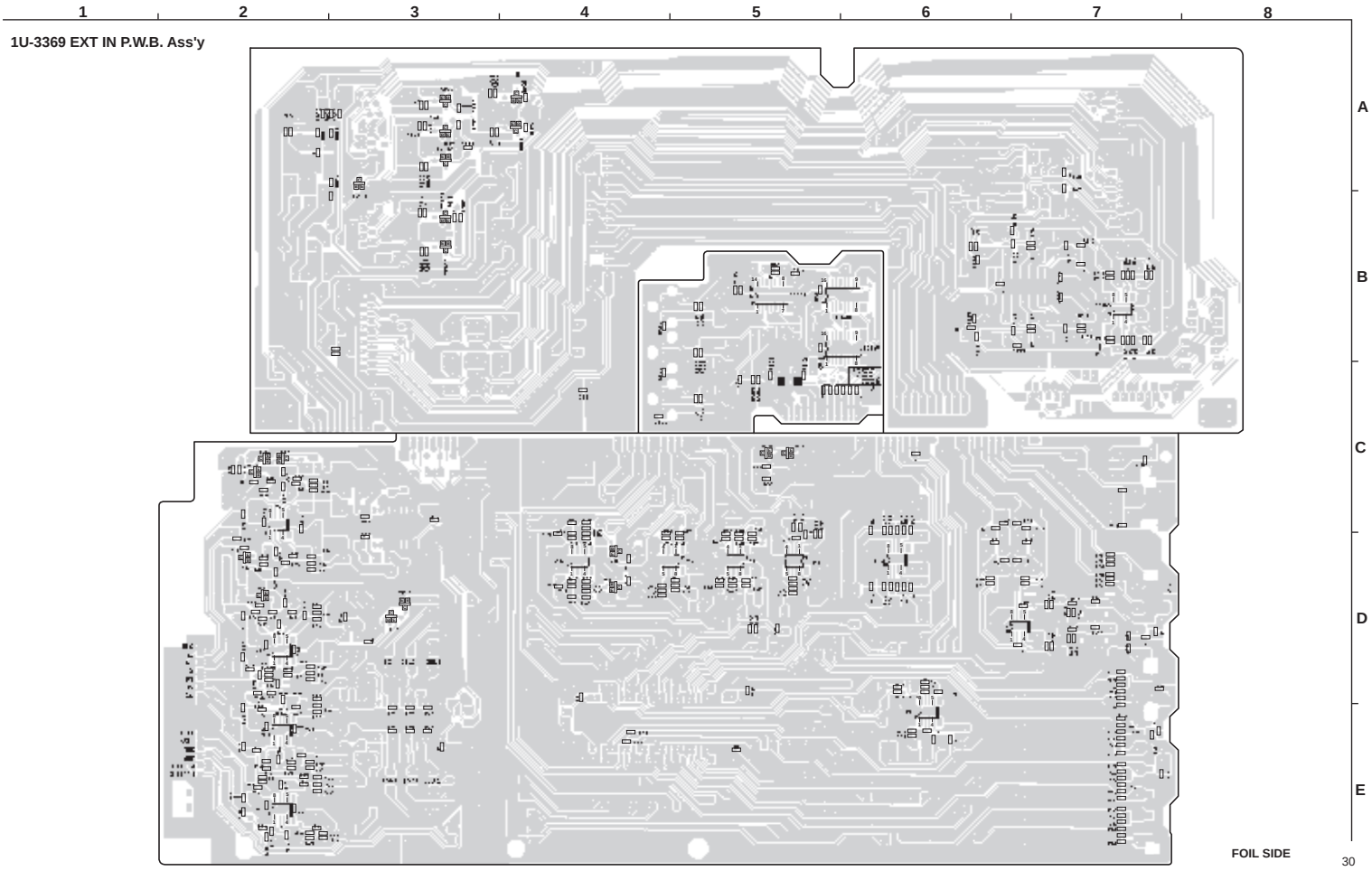

FOIL SIDE

Downloaded from www.Manualslib.com manuals search engine

1U-3370 CONTROL P.W.B. Ass'y

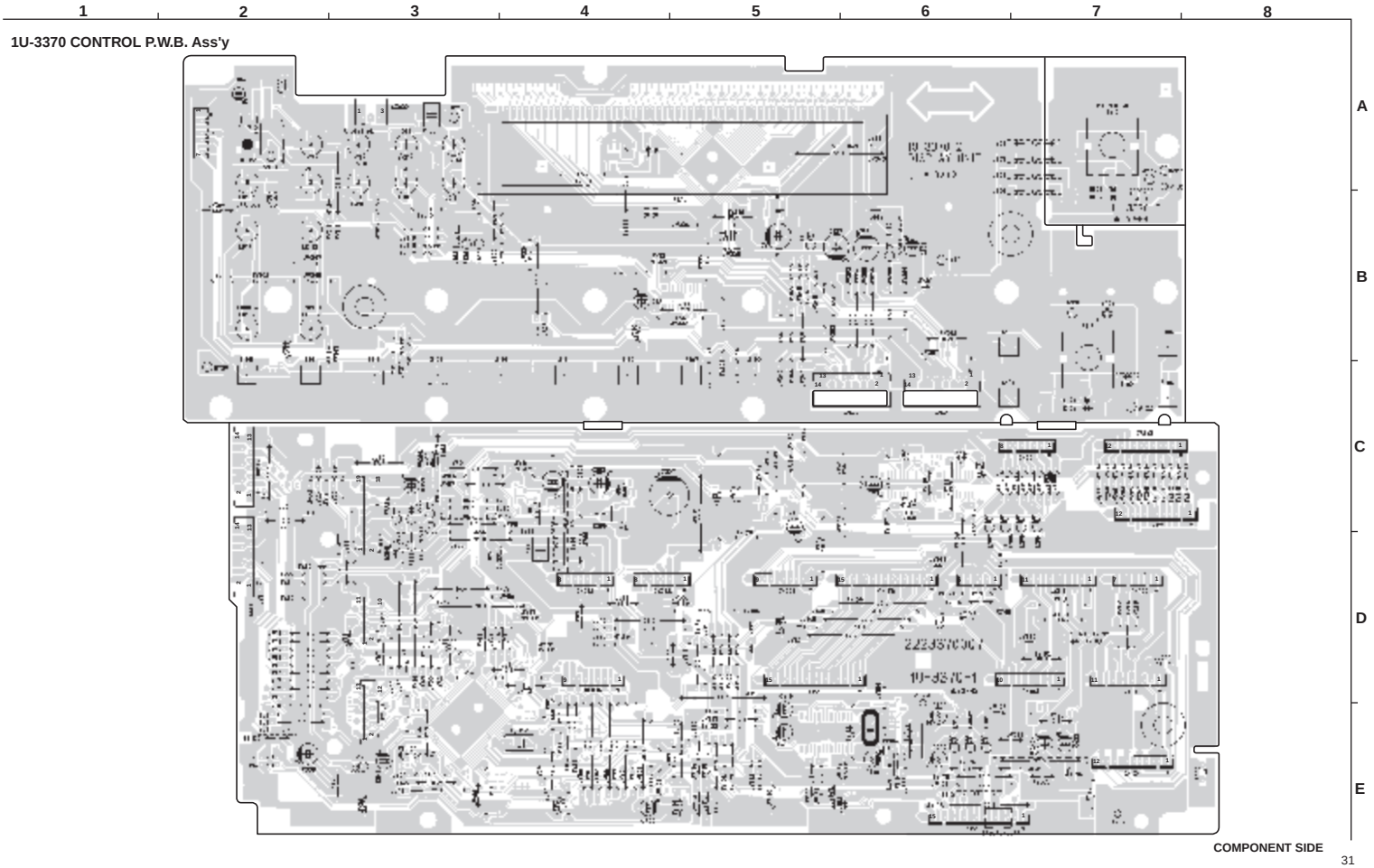

COMPONENT SIDE

Downloaded from www.Manualslib.com manuals search engine

1U-3370 CONTROL P.W.B. Ass'y

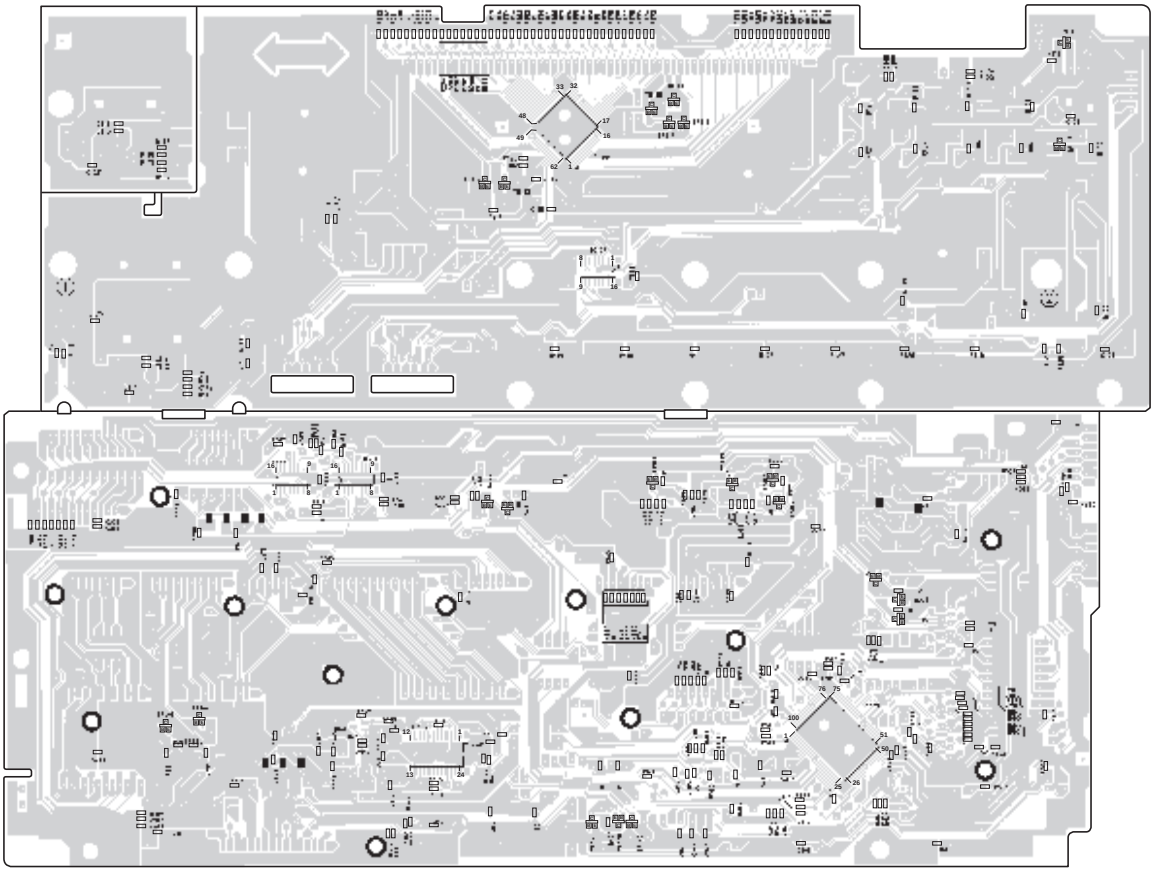

FOIL SIDE

Downloaded from www.Manualslib.com manuals search engine

1U-3371 AMP CONNECT P.W.B. Ass'y

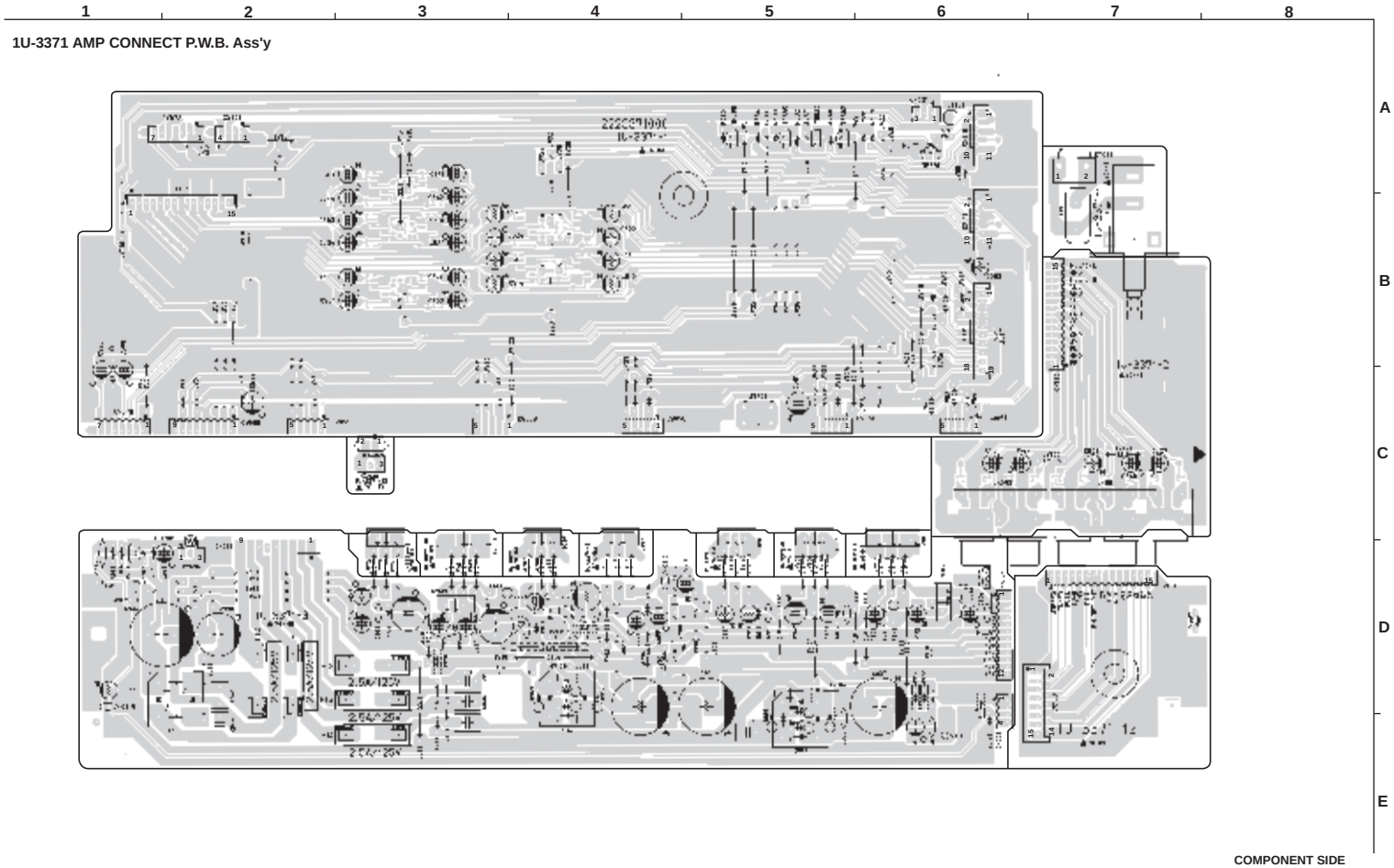

COMPONENT SIDE

Downloaded from www.Manualslib.com manuals search engine

1U-3371 AMP CONNECT P.W.B. Ass'y

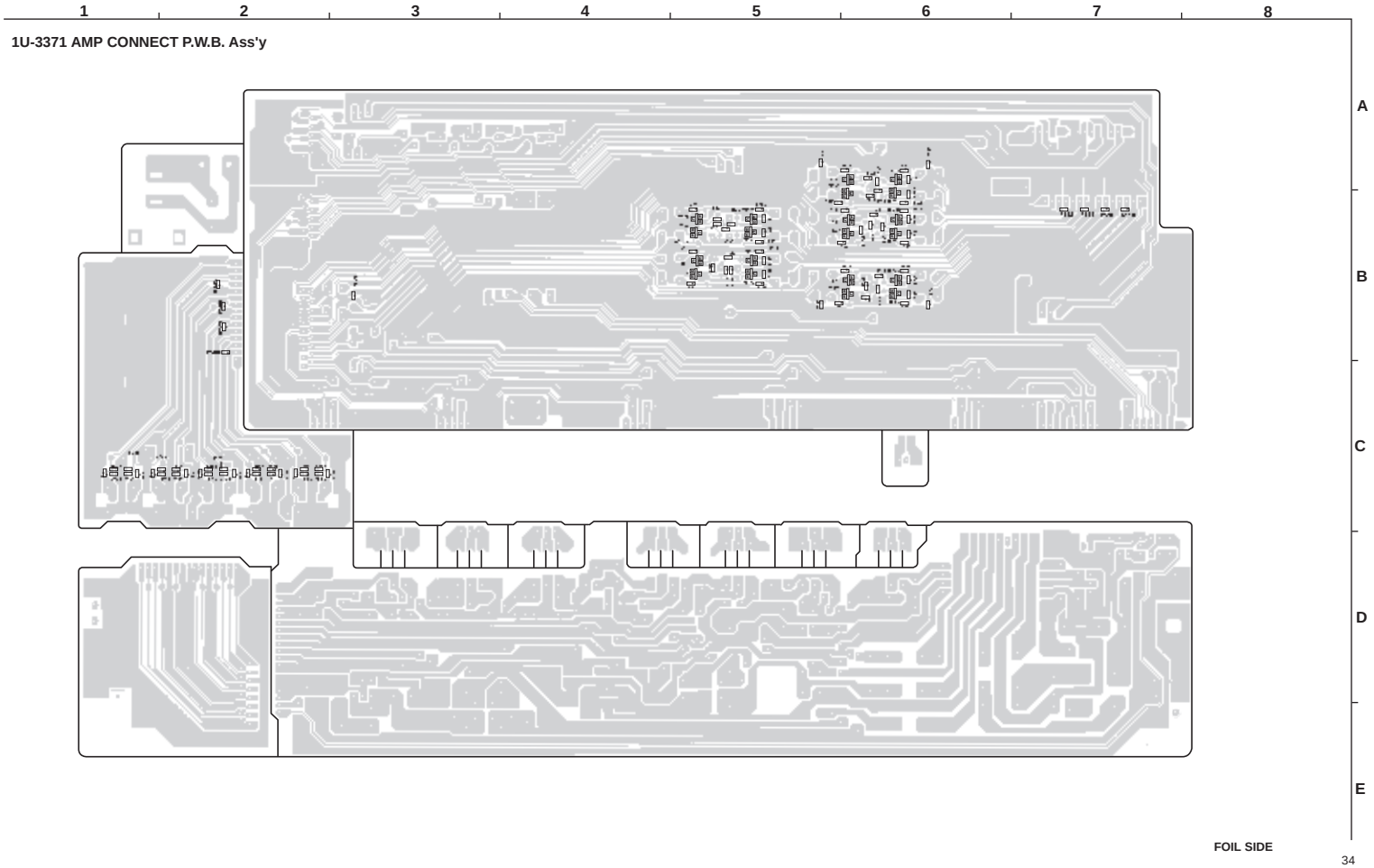

FOIL SIDE

Downloaded from www.Manualslib.com manuals search engine

1U-3373 AUDIO DSP P.W.B. Ass'y

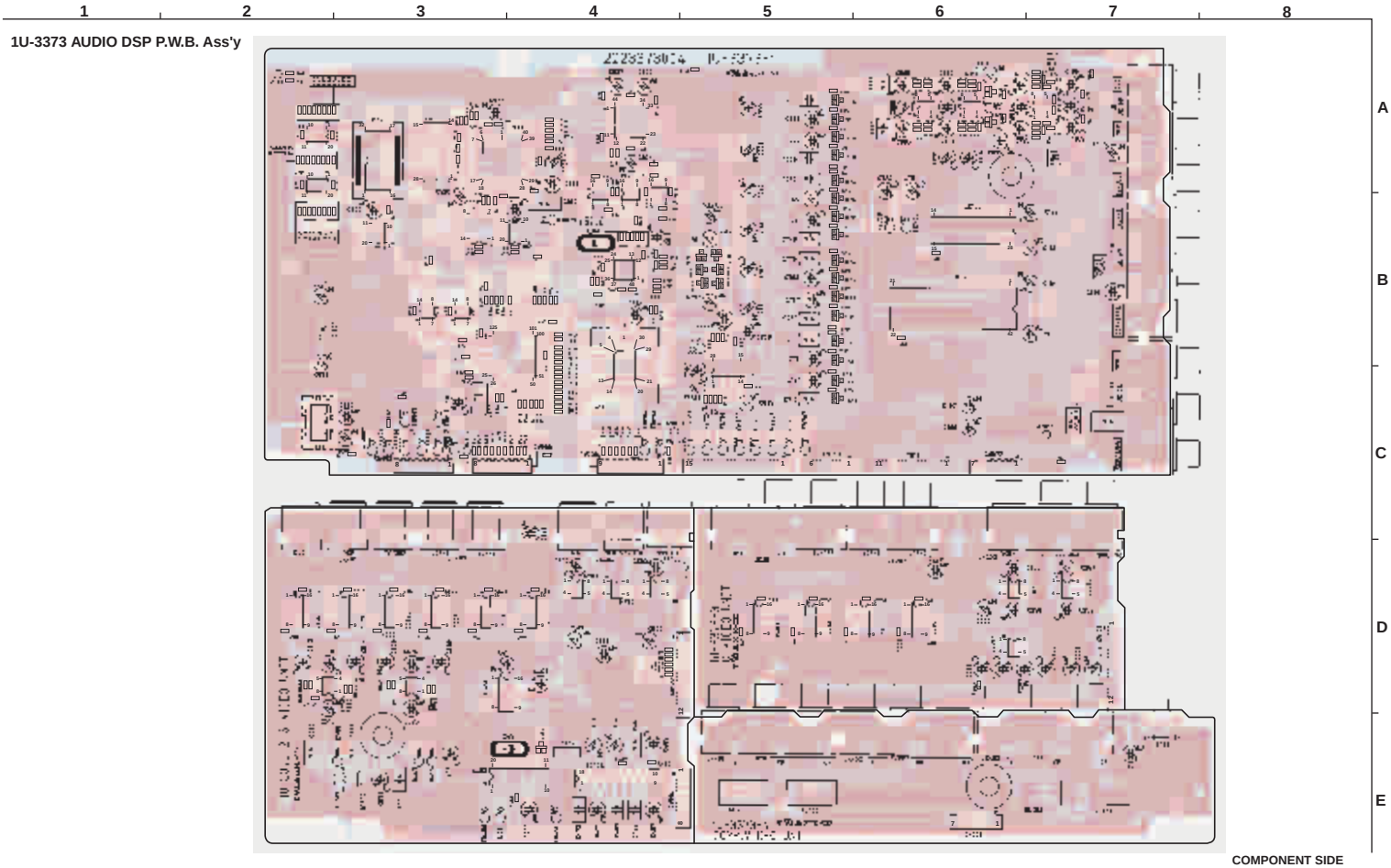

COMPONENT SIDE

Downloaded from www.Manualslib.com manuals search engine

1U-3373 AUDIO DSP P.W.B. Ass'y

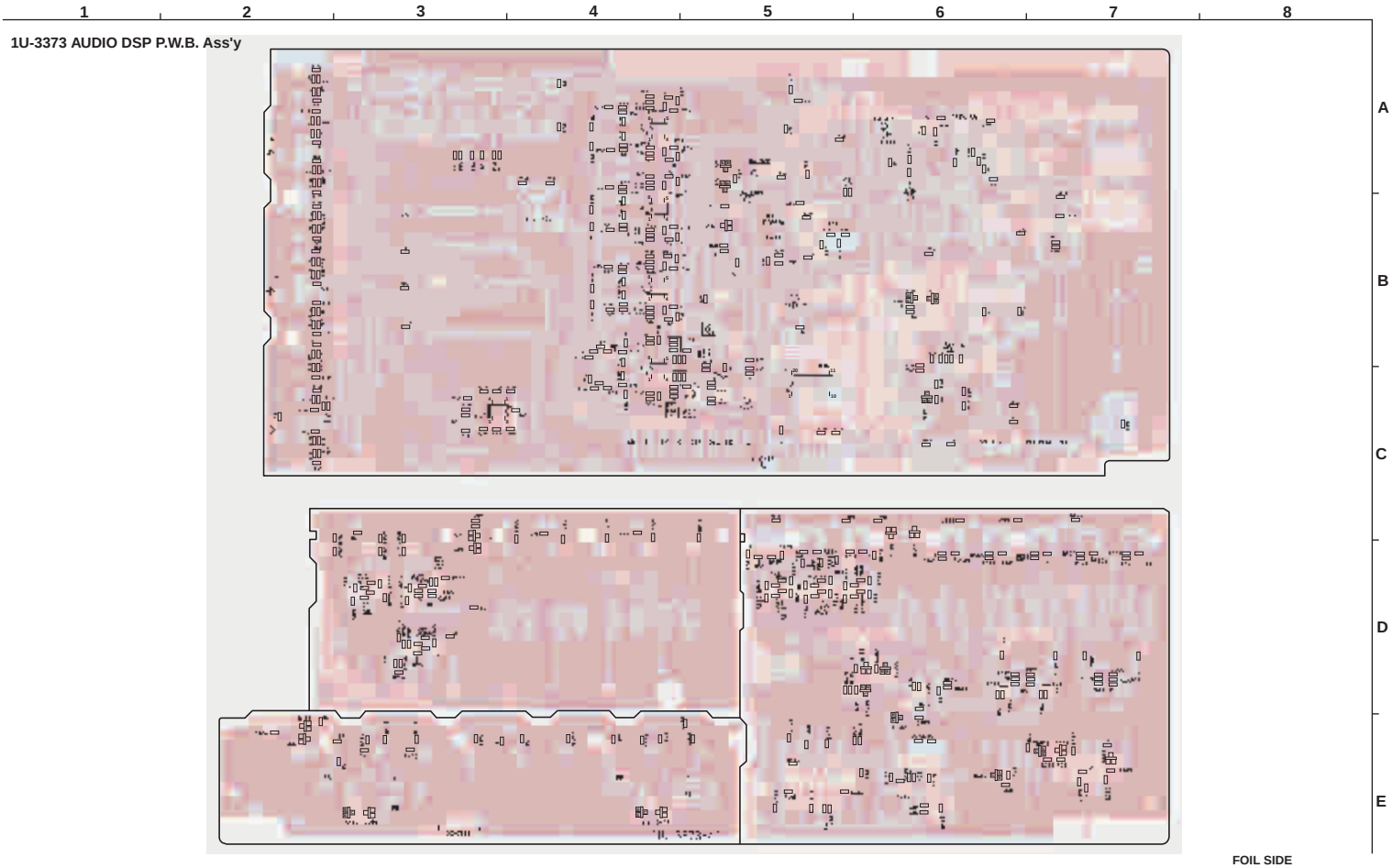

FOIL SIDE

Downloaded from www.Manualslib.com manuals search engine

NOTE FOR PARTS LIST

Part indicated with the mark "⦿" are not always in stock and possibly to take a long period of time for supplying, or in some case supplying of part may be refused.
When ordering of part, clearly indicate "1" and "I" (i) to avoid mis-supplying.
Ordering part without stating its part number can not be supplied.
Part indicated with the mark "★" is not illustrated in the exploded view.
Not including Carbon Film ±5%, 1/4W Type in the P.W.Board parts list. (Refer to the Schematic Diagram for those parts.)

WARNING:

Parts marked with this symbol ⚠ ▭ have critical characteristics.
Use ONLY replacement parts recommended by the manufacturer.

Resistors

Ex.: RN 14K 2E 182 G FR

Type | Shape and performance | Power | Resistance | Allowable error | Others

RD : Carbon	2B : 1/8W	F : ±1%	P : Pulse-resistant type
RC : Composition	2E : 1/4W	G : ±2%	NL : Low noise type
RS : Metal oxide film	2H : 1/2W	J : ±5%	NB : Non-burning type
RW : Winding	3A : 1W	K : ±10%	FR : Fuse-resistor
RN : Metal film	3D : 2W	M : ±20%	F : Lead wire forming
RK : Metal mixture	3F : 3W		
	3H : 5W		

✻ **Resistance**

1 8 2 ⇒ 1800 ohm = 1.8 kohm
- 2: Indicates number of zeros after effective number.
- 1 8: 2-digit effective number.

• Units: ohm

1 R 2 ⇒ 1.2 ohm
- 2: 1-digit effective number.
- 1 R: 2-digit effective number, decimal point indicated by R.

• Units: ohm

Capacitors

Ex.: CE 04W 1H 2R2 M BP

Type | Shape and performance | Dielectric strength | Capacity | Allowable error | Others

CE : Aluminum foil electrolytic	0J : 6.3V	F : ±1%	HS : High stability type
CA : Aluminum solid electrolytic	1A : 10V	G : ±2%	BP : Non-polar type
CS : Tantalum electrolytic	1C : 16V	J : ±5%	HR : Ripple-resistant type
CQ : Film	1E : 25V	K : ±10%	DL : For change and discharge
CK : Ceramic	1V : 35V	M : ±20%	HF : For assuring high requency
CC : Ceramic	1H : 50V	Z : +80% –20%	U : UL part
CP : Oil	2A : 100V	P : +100% –0%	C : CSA part
CM : Mica	2B : 125V	C : ±0.25pF	W : UL-CSA type
CF : Metallized	2C : 160V	D : ±0.5pF	F : Lead wire forming
CH : Metallized	2D : 200V	= : Others	
	2E : 250V		
	2H : 500V		
	2J : 630V		

✻ **Capacity (electrolyte only)**

2 2 2 ⇒ 2200μF
- 2: Indicates number of zeros after effective number.
- 2 2: 2-digit effective number.

• Units: μF.

2 R 2 ⇒ 2.2μF
- 2: 1-digit effective number.
- 2 R: 2-digit effective number, decimal point indicated by R.

• Units: μF.

✻ **Capacity (except electrolyte)**

2 2 2 ⇒ 2200pF=0.0022μF
- 2 (More than 2): Indicates number of zeros after effective number.
- 2 2: 2-digit effective number.

• Units: pF.

2 2 1 ⇒ 220pF
- 1 (0 or 1): Indicates number of zeros after effective number.
- 2 2: 2-digit effective number.

• Units: pF.

• When the dielectric strength is indicated in AC, "AC" is included after the dieelectric strength value.

Downloaded from www.Manualslib.com manuals search engine

PARTS LIST OF P.W.B. UNIT ASS'Y

1U-3368 POWER UNIT ASS'Y

Note : The symbols in the column "Remarks" indicate the following destinations.
EU: U.S.A. model — E1: Asia model
982: AVR-982 (U.S.A.) model — E1H: Hong Kong model
EC: Canada model — E1C: China model
E2: Europe model — EUT: Taiwan R.O.C. model

Ref. No.	Part No.	Part Name	Remarks
SEMICONDUCTORS GROUP			
IC501	263 1100 018	IC KIA7806API	
⚠ IC502	268 0073 905	IC ICP-N15	
TR101,102	273 0459 903	Transistor KTC2874B	
TR103-106	271 0094 919	Transistor 2SA970(BL)	
TR107,108	273 0281 906	Transistor 2SC2705(O)/(Y)	
TR109,110	271 0168 900	Transistor 2SA1145 (O)/(Y)	
TR111,112	273 0281 906	Transistor 2SC2705(O)/(Y)	
TR117,118	273 0458 904	Transistor 2SC/KTC3200BL	
TR201,202	273 0459 903	Transistor KTC2874B	
TR203-206	271 0094 919	Transistor 2SA970(BL)	
TR207,208	273 0281 906	Transistor 2SC2705(O)/(Y)	
TR209,210	271 0168 900	Transistor 2SA1145 (O)/(Y)	
TR211,212	273 0281 906	Transistor 2SC2705(O)/(Y)	
TR217,218	273 0458 904	Transistor 2SC/KTC3200BL	
TR301	273 0459 903	Transistor KTC2874B	
TR303	271 0094 919	Transistor 2SA970(BL)	
TR305	271 0094 919	Transistor 2SA970(BL)	
TR307	273 0281 906	Transistor 2SC2705(O)/(Y)	
TR309	271 0168 900	Transistor 2SA1145 (O)/(Y)	
TR311	273 0281 906	Transistor 2SC2705(O)/(Y)	
TR317	273 0458 904	Transistor 2SC/KTC3200BL	
TR401	273 0459 903	Transistor KTC2874B	
TR403	271 0094 919	Transistor 2SA970(BL)	
TR405	271 0094 919	Transistor 2SA970(BL)	
TR407	273 0281 906	Transistor 2SC2705(O)/(Y)	
TR409	271 0168 900	Transistor 2SA1145 (O)/(Y)	
TR411	273 0281 906	Transistor 2SC2705(O)/(Y)	
TR417	273 0458 904	Transistor 2SC/KTC3200BL	
TR501	271 0094 919	Transistor 2SA970(BL)	
TR502	271 0131 924	Transistor 2SA988(E/F)	
TR503	273 0429 904	Transistor 2SC3311A	
TR504	271 0192 905	Transistor 2SA933S(S)	
TR505,506	273 0429 904	Transistor 2SC3311A	
TR507	271 0192 905	Transistor 2SA933S(S)	
TR508,509	273 0429 904	Transistor 2SC3311A	
TR510	273 0303 910	Transistor 2SC1740S(S)	
TR511	269 0020 906	Transistor DTC114ES(10K-10K)	
D101-108	276 0432 903	Diode 1SS270A	
D113-116	276 0432 903	Diode 1SS270A	
D201-208	276 0432 903	Diode 1SS270A	
D213-216	276 0432 903	Diode 1SS270A	
D301	276 0432 903	Diode 1SS270A	
D303	276 0432 903	Diode 1SS270A	
D305	276 0432 903	Diode 1SS270A	
D307	276 0432 903	Diode 1SS270A	
D313	276 0432 903	Diode 1SS270A	
D315	276 0432 903	Diode 1SS270A	
D401	276 0432 903	Diode 1SS270A	
D403	276 0432 903	Diode 1SS270A	
D405	276 0432 903	Diode 1SS270A	
D407	276 0432 903	Diode 1SS270A	
D413	276 0432 903	Diode 1SS270A	
D415	276 0432 903	Diode 1SS270A	
D501,502	276 0338 007	Diode S4VB20F	
D504-509	276 0704 903	Diode 1SR35-400A(T93X)	
D510	276 0432 903	Diode 1SS270A	
D601,602	276 0432 903	Diode 1SS270A	
D604,605	276 0432 903	Diode 1SS270A	
D607	276 0432 903	Diode 1SS270A	
ZD101,102	276 0460 904	Zener diode HZS5C-1TD	
ZD103,104	276 0461 903	Zener diode HZS6A-1TD	
ZD201,202	276 0460 904	Zener diode HZS5C-1TD	
ZD203,204	276 0461 903	Zener diode HZS6A-1TD	
ZD301	276 0460 904	Zener diode HZS5C-1TD	
ZD303	276 0461 903	Zener diode HZS6A-1TD	
ZD401	276 0460 904	Zener diode HZS5C-1TD	
ZD403	276 0461 903	Zener diode HZS6A-1TD	
ZD503	276 0465 912	Zener diode HZS7B-2TD	
ZD504	276 0645 907	Zener diode MTZJ18A	
SC501	279 0016 904	Thyristor SF0R1A42	
RESISTORS GROUP			
R113,114	241 2379 987	Carbon film 1 kohm 1/4W(NB)	RD14B2E102JNBST
R119,120	241 2379 987	Carbon film 1 kohm 1/4W(NB)	RD14B2E102JNBST
R123,124	241 2378 920	Carbon film 220 ohm 1/4W(NB)	RD14B2E221JNBST
R125,126	244 2671 914	Metal oxide 15 kohm 2W(NB)	RS14B3D153JNBST(S)
R127,128	241 2378 946	Carbon film 270 ohm 1/4W(NB)	RD14B2E271JNBST
R129,130	241 2378 920	Carbon film 220 ohm 1/4W(NB)	RD14B2E221JNBST
R137-140	241 2376 964	Carbon film 47 ohm 1/4W(NB)	RD14B2E470JNBST
R141-148	244 2671 956	Metal oxide 0.47 ohm 2W(NB)	RS14B3DR47JNBST(S)
R213,214	241 2379 987	Carbon film 1 kohm 1/4W(NB)	RD14B2E102JNBST
R219,220	241 2379 987	Carbon film 1 kohm 1/4W(NB)	RD14B2E102JNBST
R223,224	241 2378 920	Carbon film 220 ohm 1/4W(NB)	RD14B2E221JNBST
R225,226	244 2671 914	Metal oxide 15 kohm 2W(NB)	RS14B3D153JNBST(S)
R227,228	241 2378 946	Carbon film 270 ohm 1/4W(NB)	RD14B2E271JNBST

Downloaded from www.Manualslib.com manuals search engine

Ref. No.	Part No.	Part Name	Remarks
R229,230	241 2378 920	Carbon film 220 ohm 1/4W(NB)	RD14B2E221JNBST
R237-240	241 2376 964	Carbon film 47 ohm 1/4W(NB)	RD14B2E470JNBST
R241-248	244 2671 956	Metal oxide 0.47 ohm 2W(NB)	RS14B3DR47JNBST(S)
R313	241 2379 987	Carbon film 1 kohm 1/4W(NB)	RD14B2E102JNBST
R319	241 2379 987	Carbon film 1 kohm 1/4W(NB)	RD14B2E102JNBST
R323	241 2378 920	Carbon film 220 ohm 1/4W(NB)	RD14B2E221JNBST
R325	244 2671 914	Metal oxide 15 kohm 2W(NB)	RS14B3D153JNBST(S)
R327	241 2378 946	Carbon film 270 ohm 1/4W(NB)	RD14B2E271JNBST
R329	241 2378 920	Carbon film 220 ohm 1/4W(NB)	RD14B2E221JNBST
R337	241 2376 964	Carbon film 47 ohm 1/4W(NB)	RD14B2E470JNBST
R339	241 2376 964	Carbon film 47 ohm 1/4W(NB)	RD14B2E470JNBST
R341	244 2671 956	Metal oxide 0.47 ohm 2W(NB)	RS14B3DR47JNBST(S)
R343	244 2671 956	Metal oxide 0.47 ohm 2W(NB)	RS14B3DR47JNBST(S)
R345	244 2671 956	Metal oxide 0.47 ohm 2W(NB)	RS14B3DR47JNBST(S)
R347	244 2671 956	Metal oxide 0.47 ohm 2W(NB)	RS14B3DR47JNBST(S)
R413	241 2379 987	Carbon film 1 kohm 1/4W(NB)	RD14B2E102JNBST
R419	241 2379 987	Carbon film 1 kohm 1/4W(NB)	RD14B2E102JNBST
R423	241 2378 920	Carbon film 220 ohm 1/4W(NB)	RD14B2E221JNBST
R425	244 2671 914	Metal oxide 15 kohm 2W(NB)	RS14B3D153JNBST(S)
R427	241 2378 946	Carbon film 270 ohm 1/4W(NB)	RD14B2E271JNBST
R429	241 2378 920	Carbon film 220 ohm 1/4W(NB)	RD14B2E221JNBST
R437	241 2376 964	Carbon film 47 ohm 1/4W(NB)	RD14B2E470JNBST
R439	241 2376 964	Carbon film 47 ohm 1/4W(NB)	RD14B2E470JNBST
R441	244 2671 956	Metal oxide 0.47 ohm 2W(NB)	RS14B3DR47JNBST(S)
R443	244 2671 956	Metal oxide 0.47 ohm 2W(NB)	RS14B3DR47JNBST(S)
R445	244 2671 956	Metal oxide 0.47 ohm 2W(NB)	RS14B3DR47JNBST(S)
R447	244 2671 956	Metal oxide 0.47 ohm 2W(NB)	RS14B3DR47JNBST(S)
R501	241 2387 940	Carbon film 4.7 ohm 1/4W(NB)	RD14B2E4R7JNBST
R502	244 2051 961	Metal oxide 100 ohm 1W	RS14B3A101JNBST(S)
R503,504	243 2039 032	Winding 0.1 ohm 5W	RW99=3H0R1K
R524	242 2009 001	Composition 2.2 Mohm 1/2W	RC05GF2H225K(UL) For EU,982,EC
R611,612	244 2671 901	Metal oxide 10 ohm 2W(NB)	RS14B3D100JNBST(S)
R630,631	244 2671 901	Metal oxide 10 ohm 2W(NB)	RS14B3D100JNBST(S)
R634,635	244 2671 901	Metal oxide 10 ohm 2W(NB)	RS14B3D100JNBST(S)
R713,714	244 2052 931	Metal oxide 390 ohm 1W	RS14B3A391JNBST(S) For EU,982,EC
	244 2052 960	Metal oxide 220 ohm 1W	RS14B3A221JNBST(S) For E2,E1,E1H,E1C,EUT
R715,716	244 2052 960	Metal oxide 220 ohm 1W	RS14B3A221JNBST(S) For E2,E1,E1H,E1C,EUT
VR101,102	211 6131 926	Semi fixed resistor 220 ohm	V06PB221T
VR201,202	211 6131 926	Semi fixed resistor 220 ohm	V06PB221T
VR301	211 6131 926	Semi fixed resistor 220 ohm	V06PB221T

Ref. No.	Part No.	Part Name	Remarks
VR401	211 6131 926	Semi fixed resistor 220 ohm	V06PB221T
CAPACITORS GROUP			
C101,102	254 4538 939	Electrolytic 47 uF/16V	CE04W1C470MT SMG/RE3 For EU,982,EC,E1, E1H,E1C,EUT
	254 4538 942	Electrolytic 100 uF/16V	CE04W1C101MT SMG/RE3 For E2
C103,104	254 4524 985	Electrolytic 10 uF/50V	CE04W1H100MT SMG/RE3
C105-108	253 1179 945	Ceramic 220 pF/50V	CK45B1H221KT(DD-3)
C109,110	255 1264 908	Mylar film 1000 pF/50V	CQ93M1H102JT(B)
C111,112	253 4482 901	Ceramic 33 pF/500V	CC45SL2H330JT
C113,114	254 4538 942	Electrolytic 100 uF/16V	CE04W1C101MT SMG/RE3
C115,116	253 4486 907	Ceramic 47 pF/500V	CC45SL2H470JT
C117,118	253 4465 902	Ceramic 5 pF/500V	CC45SL2H050CT
C119,120	255 1275 942	Mylar film 220 pF/100V	CQ93M2A221KT(B)
C121,122	254 4527 982	Electrolytic 10 uF/100V	CE04W2A100MT SMG/RE3
C123-126	254 4527 979	Electrolytic 4.7 uF/100V	CE04W2A4R7MT SMG/RE3
C201,202	254 4538 939	Electrolytic 47 uF/16V	CE04W1C470MT SMG/RE3 For EU,982,EC, E1,E1H,E1C,EUT
	254 4538 942	Electrolytic 100 uF/16V	CE04W1C101MT SMG/RE3 For E2
C203,204	254 4524 985	Electrolytic 10 uF/50V	CE04W1H100MT SMG/RE3
C205-208	253 1179 945	Ceramic 220 pF/50V	CK45B1H221KT(DD-3)
C209,210	255 1264 908	Mylar film 1000 pF/50V	CQ93M1H102JT(B)
C211,212	253 4482 901	Ceramic 33 pF/500V	CC45SL2H330JT
C213,214	254 4538 942	Electrolytic 100 uF/16V	CE04W1C101MT SMG/RE3
C215,216	253 4486 907	Ceramic 47 pF/500V	CC45SL2H470JT
C217,218	253 4465 902	Ceramic 5 pF/500V	CC45SL2H050CT
C219,220	255 1275 942	Mylar film 220 pF/100V	CQ93M2A221KT(B)
C221,222	254 4527 982	Electrolytic 10 uF/100V	CE04W2A100MT SMG/RE3
C223-226	254 4527 979	Electrolytic 4.7 uF/100V	CE04W2A4R7MT SMG/RE3
C301	254 4538 939	Electrolytic 47 uF/16V	CE04W1C470MT SMG/RE3 For EU,982,EC,E1,E1H,E1C,EUT
	254 4538 942	Electrolytic 100 uF/16V	CE04W1C101MT SMG/RE3 For E2
C303	254 4524 985	Electrolytic 10 uF/50V	CE04W1H100MT SMG/RE3
C305	253 1179 945	Ceramic 220 pF/50V	CK45B1H221KT(DD-3)
C307	253 1179 945	Ceramic 220 pF/50V	CK45B1H221KT(DD-3)
C309	255 1264 908	Mylar film 1000 pF/50V	CQ93M1H102JT(B)
C311	253 4482 901	Ceramic 33 pF/500V	CC45SL2H330JT
C313	254 4538 942	Electrolytic 100 uF/16V	CE04W1C101MT SMG/RE3
C315	253 4486 907	Ceramic 47 pF/500V	CC45SL2H470JT
C317	253 4465 902	Ceramic 5 pF/500V	CC45SL2H050CT
C319	255 1275 942	Mylar film 220 pF/100V	CQ93M2A221KT(B)
C321	254 4527 982	Electrolytic 10 uF/100V	CE04W2A100MT SMG/RE3
C323	254 4527 979	Electrolytic 4.7 uF/100V	CE04W2A4R7MT SMG/RE3
C325	254 4527 979	Electrolytic 4.7 uF/100V	CE04W2A4R7MT SMG/RE3

Downloaded from www.Manualslib.com manuals search engine

Ref. No.	Part No.	Part Name	Remarks
C401	254 4538 939	Electrolytic 47 uF/16V	CE04W1C470MT SMG/RE3 For EU,982,EC, E1,E1H,E1C,EUT
	254 4538 942	Electrolytic 100 uF/16V	CE04W1C101MT SMG/RE3 For E2
C403	254 4524 985	Electrolytic 10 uF/50V	CE04W1H100MT SMG/RE3
C405	253 1179 945	Ceramic 220 pF/50V	CK45B1H221KT(DD-3)
C407	253 1179 945	Ceramic 220 pF/50V	CK45B1H221KT(DD-3)
C409	255 1264 908	Mylar film 1000 pF/50V	CQ93M1H102JT(B)
C411	253 4482 901	Ceramic 33 pF/500V	CC45SL2H330JT
C413	254 4538 942	Electrolytic 100 uF/16V	CE04W1C101MT SMG/RE3
C415	253 4486 907	Ceramic 47 pF/500V	CC45SL2H470JT
C417	253 4465 902	Ceramic 5 pF/500V	CC45SL2H050CT
C419	255 1275 942	Mylar film 220 pF/100V	CQ93M2A221KT(B)
C421	254 4527 982	Electrolytic 10 uF/100V	CE04W2A100MT SMG/RE3
C423	254 4527 979	Electrolytic 4.7 uF/100V	CE04W2A4R7MT SMG/RE3
C425	254 4527 979	Electrolytic 4.7 uF/100V	CE04W2A4R7MT SMG/RE3
C502	254 4524 943	Electrolytic 1 uF/50V	CE04W1H010MT SMG/RE3
C503-505	256 1042 903	Metalized 0.1 uF/250V	CF93A2E104KT
C506	254 4528 729	Electrolytic 100 uF/100V	CE04W2A101MC SMG/RE3
C507,508	254 6224 704	Electrolytic 10000 uF/63V	CE68W1J103MC(DL)
C509	253 1181 904	Ceramic 0.01 uF/50V	CK45F1H103ZT(DD-3)
C510	254 4538 900	Electrolytic 10 uF/16V	CE04W1C100MT SMG/RE3
C511	253 9039 906	Ceramic 0.1 uF/25V	CK45=1E104ZT(DD-3)
C512	254 4533 947	Electrolytic 330 uF/6.3V	CE04W0J331MT SMG/RE3
C513	253 9039 906	Ceramic 0.1 uF/25V	CK45=1E104ZT(DD-3)
C514	254 4533 947	Electrolytic 330 uF/6.3V	CE04W0J331MT SMG/RE3
C516	254 4538 900	Electrolytic 10 uF/16V	CE04W1C100MT SMG/RE3
C517	254 4524 943	Electrolytic 1 uF/50V	CE04W1H010MT SMG/RE3
C519,520	253 1181 904	Ceramic 0.01 uF/50V	CK45F1H103ZT(DD-3)
C522	254 4403 721	Electrolytic 2200 uF/25V	CE04W1E222MC (SMG)
C523	254 4524 943	Electrolytic 1 uF/50V	CE04W1H010MT SMG/RE3
C524	256 1058 971	Metalized 0.1 uF/50V	CF93A1H104JT (JL)
C525	253 8022 707	Ceramic 0.01 uF/250V(AC)	CK45F2EAC103MC
C606,607	256 1058 939	Metalized 0.047 uF/50V	CF93A1H473JT (JL)
C611-614	255 1265 936	Mylar film 0.01 uF/50V	CQ93M1H103JT(B) For E2,E1,E1H,E1C,EUT
C616-619	253 1181 904	Ceramic 0.01 uF/50V	CK45F1H103ZT(DD-3)
C627,628	256 1058 939	Metalized 0.047 uF/50V	CF93A1H473JT (JL)
C629-632	255 1265 936	Mylar film 0.01 uF/50V	CQ93M1H103JT(B) For E2,E1,E1H,E1C,EUT
C633	253 1181 904	Ceramic 0.01 uF/50V	CK45F1H103ZT(DD-3)
C634,635	256 1058 939	Metalized 0.047 uF/50V	CF93A1H473JT (JL)
C636-638	253 1181 904	Ceramic 0.01 uF/50V	CK45F1H103ZT(DD-3)
C721,722	255 1264 908	Mylar film 1000 pF/50V	CQ93M1H102JT(B) For E2,E1,E1H,E1C,EUT
C723	253 9039 906	Ceramic 0.1 uF/25V	CK45=1E104ZT(DD-3)
C802,803	253 1181 904	Ceramic 0.01 uF/50V	CK45F1H103ZT(DD-3)

Ref. No.	Part No.	Part Name	Remarks	Q'ty
OTHER PARTS GROUP				
⚠ AC501	203 3976 002	AC outlet (2P)	For EU,982,EC,EUT	1
CW031	203 4477 018	3P KR-DA connector cord		1
CW037	203 4945 045	3P KR-DA connector cord WT	For EU,982,EC	1
CX021	205 0581 001	2P VH connector base	For E2,E1, E1H,E1C,EUT	1
CX022	205 0581 056	2P VH connector base		1
CX023	205 1093 006	2P VH connector base	For E2,E1,E1H	1
CX024	205 0581 001	2P VH connector base		1
CX032	205 0841 000	3P AC connector base (BK)	For E1,E1H	1
CX033	205 0825 000	3P AC connector base		1
CX037	205 0343 032	3P connector base (KR-PH)	For EU,982,EC	1
CX042	205 0581 030	4P VH connector base	For E1,E1H	1
CX054-058	205 0884 009	5P connector base (TUC-P)		5
CX076	205 0943 021	7P connector base (TUC-P)		1
CX077	205 1081 018	7P FJ connector base		1
CX096	205 0884 038	9P connector base (TUC-P)		1
CX102	205 0884 054	10P connector base (TUC-P)		1
⚠ F1	206 1046 001	Fuse 6.3A UL 20mm	For EU,982,EC,EUT	1
⚠	206 1015 074	Fuse 3.15A	For E2,E1C	1
⚠	206 1036 011	Fuse 6.3A	For E1,E1H	1
⚠ F8	206 1046 014	Fuse 8A	For EU,982,EC,EUT	1
⚠	206 1015 032	Fuse 2.5A	For E2,E1,E1H	1
⚠ F901	206 1015 074	Fuse 3.15A	For E1,E1H	1
FF501	202 0040 909	Fuse clip		1
FF502	202 0040 909	Fuse clip	For EU,982,EC, E2,E1,E1H,EUT	1
FF751	202 0040 909	Fuse clip	For E1,E1H	1
FH501	202 0040 909	Fuse clip		1
FH502	202 0040 909	Fuse clip	For EU,982,EC, E2,E1,E1H,EUT	1
FH751	202 0040 909	Fuse clip	For E1,E1H	1
JK601	205 1212 007	8P SP terminal		1
JK603	205 1212 007	8P SP terminal		1
JK702	204 8264 013	Head phone jack (NI)	For EU,982,EC,E2	1
	204 8264 071	Head phone jack (Gold)	For E1,E1H, E1C,EUT	1
L601,602	235 0068 004	Inductor 1uH		2
L606-609	235 0068 004	Inductor 1uH		4
RL501	214 0202 009	Relay DG1U TV-8		1
RL601-603	214 0217 010	Relay (DS2SU12VDC)		3
RL604	214 0203 008	Relay (NA12W-K)		1
RL605	214 0217 010	Relay (DS2SU12VDC)		1

Downloaded from www.Manualslib.com manuals search engine

Ref. No.	Part No.	Part Name	Remarks	Q'ty
S751	212 4810 006	Slide switch	For E1,E1H	1
S801	212 0373 000	Rotary encoder EC16B		1
S802,803	212 5611 903	Tact switch		2
S804	212 5611 903	Tact switch		1
S805	212 5611 903	Tact switch		1
SW901	212 0420 005	1P push switch (non lock)	For EU,982,EC	1
⚠ T501	233 6073 107	Power trans. (Mini)-E3	For EU,982,EC,EUT	1
⚠	233 6058 025	Power trans. (Mini)-E2	For E2	1
⚠	233 6278 009	Power trans. (Mini)-E1	For E1,E1H	1
⚠	233 6317 009	Power trans	For E1C	1
TP101-103	205 0190 049	4P NH connector base		3
TP501	205 0190 036	3P NH connector base	For EU,982,EC, E1,E1H,E1C,EUT	1
W712	203 0526 002	1P contact ass'y		1
W751	203 0702 004	1P SIN-SIN wire(WHT)		1
W752	203 0702 017	1P SIN-SIN wire(RED)		1
W753	203 0702 020	1P SIN-SIN wire(YEW)		1
W755	203 0699 036	1P SIN-SIN wire(GRY)		1
W756	203 0702 033	1P SIN-SIN wire(ORG)		1
W757	203 0702 046	1P SIN-SIN wire(BLU)		1
	203 5220 002	3P VH connector cord	For E1,E1H	1
	203 8505 009	5P VH connector cord	For E1,E1H	1
	513 2585 045	Fuse label	For F1 For E2,E1C	1
	513 2654 057	Fuse label	For F1 For E1,E1H	1
	513 2585 074	Fuse label	For F8 For E2,E1,E1H	1

1U-3369 EXT. IN UNIT ASS'Y

Ref. No.	Part No.	Part Name	Remarks
SEMICONDUCTORS GROUP			
IC102	262 2616 003	IC TC9184AP	
IC103	263 0896 909	IC NJM2068MD	
IC301,302	263 0896 909	IC NJM2068MD	
IC308-310	263 0896 909	IC NJM2068MD	
IC312	262 2919 001	IC TC9274N-017	
IC501-503	269 0194 007	Optical connector GP1FA551RZ	
IC504	262 1205 907	IC TC74HCU04AF	
IC505,506	262 2386 906	IC SN74HC151NS	
IC701	263 0896 909	IC NJM2068MD	
IC707	269 0187 001	Optical connector GP1FA551TZ	
IC801	263 0896 909	IC NJM2068MD	For EU,982,EC
	263 0898 907	IC NJM5532MD	For E2,E1,E1H,E1C,EUT
IC802-804	263 0896 909	IC NJM2068MD	
IC805	262 2662 002	IC TC9459N	
IC809	262 2981 000	IC TC9482N	
TR327,328	275 0100 902	Transistor 2SK771-5-TB	
TR329	269 0054 901	Transistor DTC144EK	
TR330	269 0055 900	Transistor DTA144EK	
TR801-803	275 0100 902	Transistor 2SK771-5-TB	
TR805	269 0083 901	Transistor DTA114EK	
TR807	269 0054 901	Transistor DTC144EK	
TR808	269 0083 901	Transistor DTA114EK	
TR809	269 0082 902	Transistor DTC114EK	
TR810	273 0460 905	Transistor KTC2875B	
TR901	271 0131 924	Transistor 2SA988(E/F)	
TR902	274 0160 907	Transistor 2SD2144STPU	
TR903	269 0020 906	Transistor DTC114ES(10K-10K)	
TR904,905	271 0131 924	Transistor 2SA988(E/F)	
TR906-908	269 0083 901	Transistor DTA114EK	
TR909	269 0083 901	Transistor DTA114EK	
TR910	269 0083 901	Transistor DTA114EK	
TR911	271 0131 924	Transistor 2SA988(E/F)	
TR912	269 0083 901	Transistor DTA114EK	
TR913	271 0131 924	Transistor 2SA988(E/F)	
TR914	269 0082 902	Transistor DTC114EK	
TR956	269 0083 901	Transistor DTA114EK	
D323,324	276 0432 903	Diode 1SS270A	
D701	276 0432 903	Diode 1SS270A	
D801-803	276 0432 903	Diode 1SS270A	
D901-910	276 0723 900	Diode RB721Q-40	For EU,982,EC

Downloaded from www.Manualslib.com manuals search engine

Ref. No.	Part No.	Part Name	Remarks
	276 0432 903	Diode 1SS270A	For E2,E1,E1H,E1C,EUT
D911,912	276 0432 903	Diode 1SS270A	
D913	276 0704 903	Diode 1SR35-400A(T93X)	
D914	276 0484 919	Zener diode HZS33-2TD	
D915	276 0704 903	Diode 1SR35-400A(T93X)	
D916	276 0461 916	Zener diode HZS6A-2TD	
D917	276 0704 903	Diode 1SR35-400A(T93X)	
D918,919	276 0723 900	Diode RB721Q-40	For EU,982,EC
	276 0432 903	Diode 1SS270A	For E2,E1,E1H,E1C,EUT
RESISTORS GROUP			
R101,102	247 2008 968	Carbon chip 3.3 kohm 1/16W	RM73B--332JT
R103,104	247 2006 986	Carbon chip 560 ohm 1/16W	RM73B--561JT
R105,106	247 2013 982	Carbon chip 470 kohm 1/16W	RM73B--474JT
R107,108	247 2005 903	Carbon chip 100 ohm 1/16W	RM73B--101JT
R109,110	247 2012 909	Carbon chip 82 kohm 1/16W	RM73B--823JT
R111,112	247 2009 909	Carbon chip 4.7 kohm 1/16W	RM73B--472JT (1608)
R113	247 2013 982	Carbon chip 470 kohm 1/16W	RM73B--474JT
R114,115	247 2011 926	Carbon chip 39 kohm 1/16W	RM73B--393JT
R116	247 2013 982	Carbon chip 470 kohm 1/16W	RM73B--474JT
R117,118	247 2014 907	Carbon chip 560 kohm 1/16W	RM73B--564JT
R119,120	247 2004 920	Carbon chip 47 ohm 1/16W	RM73B--470JT
R121,122	247 2009 925	Carbon chip 5.6 kohm 1/16W	RM73B--562JT
R123,124	247 2010 985	Carbon chip 27 kohm 1/16W	RM73B--273JT
R125,126	247 2007 943	Carbon chip 1 kohm 1/16W	RM73B--102JT
R127,128	247 2012 925	Carbon chip 100 kohm 1/16W	RM73B--104JT
R141,142	247 2005 903	Carbon chip 100 ohm 1/16W	RM73B--101JT
R147,148	247 2005 903	Carbon chip 100 ohm 1/16W	RM73B--101JT
R319,320	247 2010 927	Carbon chip 15 kohm 1/16W	RM73B--153JT
R321	247 2009 954	Carbon chip 7.5 kohm 1/16W	RM73B--752JT
R325	247 2009 983	Carbon chip 10 kohm 1/16W	RM73B--103JT
R327	247 2009 983	Carbon chip 10 kohm 1/16W	RM73B--103JT
R333	247 2005 903	Carbon chip 100 ohm 1/16W	RM73B--101JT
R334-336	247 2012 925	Carbon chip 100 kohm 1/16W	RM73B--104JT
R337,338	247 2005 903	Carbon chip 100 ohm 1/16W	RM73B--101JT
R339,340	247 2008 926	Carbon chip 2.2 kohm 1/16W	RM73B--222JT
R341,342	247 2007 930	Carbon chip 910 ohm 1/16W	RM73B--911JT
R343,344	247 2005 903	Carbon chip 100 ohm 1/16W	RM73B--101JT
R345,346	247 2012 925	Carbon chip 100 kohm 1/16W	RM73B--104JT
R385,386	247 2005 903	Carbon chip 100 ohm 1/16W	RM73B--101JT
			For EU,982,EC
	247 2006 960	Carbon chip 470 ohm 1/16W	RM73B--471JT
			For E2,E1,E1H,E1C,EUT
R387,388	247 2015 964	Carbon chip 2.7 Mohm 1/16W	RM73B--275KT
R390	247 2018 903	Carbon chip 0 ohm 1/16W	RM73B--0R0KT
R401,402	247 2005 903	Carbon chip 100 ohm 1/16W	RM73B--101JT
			For EU,982,EC
	247 2006 960	Carbon chip 470 ohm 1/16W	RM73B--471JT
			For E2,E1,E1H,E1C,EUT
R403,404	247 2015 964	Carbon chip 2.7 Mohm 1/16W	RM73B--275KT

Ref. No.	Part No.	Part Name	Remarks
R417,418	247 2005 903	Carbon chip 100 ohm 1/16W	RM73B--101JT
			For EU,982,EC
	247 2006 960	Carbon chip 470 ohm 1/16W	RM73B--471JT
			For E2,E1,E1H,E1C,EUT
R419,420	247 2015 964	Carbon chip 2.7 Mohm 1/16W	RM73B--275KT
R433-438	247 2011 926	Carbon chip 39 kohm 1/16W	RM73B--393JT
R439,440	247 2004 920	Carbon chip 47 ohm 1/16W	RM73B--470JT
R441,442	247 2012 925	Carbon chip 100 kohm 1/16W	RM73B--104JT
R445	247 2009 983	Carbon chip 10 kohm 1/16W	RM73B--103JT
R446,447	247 2009 912	Carbon chip 5.1 kohm 1/16W	RM73B--512JT
R448-450	247 2009 983	Carbon chip 10 kohm 1/16W	RM73B--103JT
R451,452	247 2005 903	Carbon chip 100 ohm 1/16W	RM73B--101JT
R453,454	247 2012 925	Carbon chip 100 kohm 1/16W	RM73B--104JT
R455	247 2011 942	Carbon chip 47 kohm 1/16W	RM73B--473JT
R456,457	247 2012 938	Carbon chip 110 kohm 1/16W	RM73B--114JT
R458	247 2010 927	Carbon chip 15 kohm 1/16W	RM73B--153JT
R459	247 2011 913	Carbon chip 36 kohm 1/16W	RM73B--363JT
R460	247 2009 967	Carbon chip 8.2 kohm 1/16W	RM73B--822JT
R461	247 2009 996	Carbon chip 11 kohm 1/16W	RM73B--113JT
R462	247 2005 903	Carbon chip 100 ohm 1/16W	RM73B--101JT
R463	247 2012 925	Carbon chip 100 kohm 1/16W	RM73B--104JT
R467,468	247 2018 903	Carbon chip 0 ohm 1/16W	RM73B--0R0KT
R483	247 2007 943	Carbon chip 1 kohm 1/16W	RM73B--102JT
R501-503	247 2018 903	Carbon chip 0 ohm 1/16W	RM73B--0R0KT
R505-507	247 2009 909	Carbon chip 4.7 kohm 1/16W	RM73B--472JT (1608)
R508	247 2004 975	Carbon chip 75 ohm 1/16W	RM73B--750JT
R509	247 2005 903	Carbon chip 100 ohm 1/16W	RM73B--101JT
R510	247 2011 942	Carbon chip 47 kohm 1/16W	RM73B--473JT
R511	247 2013 940	Carbon chip 330 kohm 1/16W	RM73B--334JT
R512	247 2018 903	Carbon chip 0 ohm 1/16W	RM73B--0R0KT
R514	247 2018 903	Carbon chip 0 ohm 1/16W	RM73B--0R0KT
R701,702	247 2018 903	Carbon chip 0 ohm 1/16W	RM73B--0R0KT
			For EU,982,EC,
			E1,E1H,E1C
	247 2009 909	Carbon chip 4.7 kohm 1/16W	RM73B--472JT (1608)
			For E2,EUT
R703,704	247 2006 944	Carbon chip 390 ohm 1/16W	RM73B--391JT
R705,706	247 2011 984	Carbon chip 68 kohm 1/16W	RM73B--683JT
R707,708	247 2012 967	Carbon chip 150 kohm 1/16W	RM73B--154JT
R709,710	247 2004 920	Carbon chip 47 ohm 1/16W	RM73B--470JT
R711,712	247 2005 990	Carbon chip 240 ohm 1/16W	RM73B--241JT
R713,714	247 2012 954	Carbon chip 130 kohm 1/16W	RM73B--134JT
R715,716	247 2009 996	Carbon chip 11 kohm 1/16W	RM73B--113JT
R717,718	247 2003 947	Carbon chip 22 ohm 1/16W	RM73B--220JT
R719,720	247 2004 920	Carbon chip 47 ohm 1/16W	RM73B--470JT
R721,722	247 2011 942	Carbon chip 47 kohm 1/16W	RM73B--473JT
R723,724	247 2005 903	Carbon chip 100 ohm 1/16W	RM73B--101JT
			For EU,982,EC
	247 2006 960	Carbon chip 470 ohm 1/16W	RM73B--471JT
			For E2,E1,E1H,E1C,EUT

Downloaded from www.Manualslib.com manuals search engine

Ref. No.	Part No.	Part Name	Remarks
R725,726	247 2015 964	Carbon chip 2.7 Mohm 1/16W	RM73B--275KT
R801,802	247 2011 942	Carbon chip 47 kohm 1/16W	RM73B--473JT
R803,804	247 2005 903	Carbon chip 100 ohm 1/16W	RM73B--101JT
R805,806	247 2007 914	Carbon chip 750 ohm 1/16W	RM73B--751JT
			For EU,982,EC
	247 2006 986	Carbon chip 560 ohm 1/16W	RM73B--561JT
			For E2,E1,E1H,E1C,EUT
R807,808	247 2009 941	Carbon chip 6.8 kohm 1/16W	RM73B--682JT
R809,810	247 2009 909	Carbon chip 4.7 kohm 1/16W	RM73B--472JT (1608)
			For EU,982,EC
	247 2009 925	Carbon chip 5.6 kohm 1/16W	RM73B--562JT
			For E2,E1,E1H,E1C,EUT
R811,812	247 2011 942	Carbon chip 47 kohm 1/16W	RM73B--473JT
R815-818	247 2012 925	Carbon chip 100 kohm 1/16W	RM73B--104JT
R819,820	247 2005 903	Carbon chip 100 ohm 1/16W	RM73B--101JT
R821	247 2007 914	Carbon chip 750 ohm 1/16W	RM73B--751JT
			For EU,982,EC
	247 2006 986	Carbon chip 560 ohm 1/16W	RM73B--561JT
			For E2,E1,E1H,E1C,EUT
R822	247 2007 914	Carbon chip 750 ohm 1/16W	RM73B--751JT
R823	247 2009 941	Carbon chip 6.8 kohm 1/16W	RM73B--682JT
R824	247 2009 967	Carbon chip 8.2 kohm 1/16W	RM73B--822JT
R825	247 2009 909	Carbon chip 4.7 kohm 1/16W	RM73B--472JT (1608)
			For EU,982,EC
	247 2009 925	Carbon chip 5.6 kohm 1/16W	RM73B--562JT
			For E2,E1,E1H,E1C,EUT
R826	247 2013 982	Carbon chip 470 kohm 1/16W	RM73B--474JT
R827,828	247 2005 903	Carbon chip 100 ohm 1/16W	RM73B--101JT
R829	247 2011 942	Carbon chip 47 kohm 1/16W	RM73B--473JT
R831-834	247 2012 925	Carbon chip 100 kohm 1/16W	RM73B--104JT
R835,836	247 2005 903	Carbon chip 100 ohm 1/16W	RM73B--101JT
R837,838	247 2007 914	Carbon chip 750 ohm 1/16W	RM73B--751JT
			For EU,982,EC
	247 2006 986	Carbon chip 560 ohm 1/16W	RM73B--561JT
			For E2,E1,E1H,E1C,EUT
R839,840	247 2009 909	Carbon chip 4.7 kohm 1/16W	RM73B--472JT (1608)
			For EU,982,EC
	247 2009 925	Carbon chip 5.6 kohm 1/16W	RM73B--562JT
			For E2,E1,E1H,E1C,EUT
R841,842	247 2005 903	Carbon chip 100 ohm 1/16W	RM73B--101JT
R843-846	247 2012 925	Carbon chip 100 kohm 1/16W	RM73B--104JT
R847,848	247 2005 903	Carbon chip 100 ohm 1/16W	RM73B--101JT
R849,850	247 2007 914	Carbon chip 750 ohm 1/16W	RM73B--751JT
			For EU,982,EC
	247 2006 986	Carbon chip 560 ohm 1/16W	RM73B--561JT
			For E2,E1,E1H,E1C,EUT
R851,852	247 2009 909	Carbon chip 4.7 kohm 1/16W	RM73B--472JT (1608)
			For EU,982,EC
	247 2009 925	Carbon chip 5.6 kohm 1/16W	RM73B--562JT
			For E2,E1,E1H,E1C,EUT
R853,854	247 2005 903	Carbon chip 100 ohm 1/16W	RM73B--101JT

Ref. No.	Part No.	Part Name	Remarks
R855,856	247 2012 925	Carbon chip 100 kohm 1/16W	RM73B--104JT
R857	247 2009 983	Carbon chip 10 kohm 1/16W	RM73B--103JT
R858	247 2007 943	Carbon chip 1 kohm 1/16W	RM73B--102JT
R859,860	247 2011 942	Carbon chip 47 kohm 1/16W	RM73B--473JT
R867-869	247 2011 942	Carbon chip 47 kohm 1/16W	RM73B--473JT
R871,872	247 2011 942	Carbon chip 47 kohm 1/16W	RM73B--473JT
R874,875	247 2011 942	Carbon chip 47 kohm 1/16W	RM73B--473JT
R883-888	247 2012 925	Carbon chip 100 kohm 1/16W	RM73B--104JT
R891	247 2018 903	Carbon chip 0 ohm 1/16W	RM73B--0R0KT
R892	247 2007 998	Carbon chip 1.6 kohm 1/16W	RM73B--162JT
R893	247 2008 926	Carbon chip 2.2 kohm 1/16W	RM73B--222JT
R894	247 2011 942	Carbon chip 47 kohm 1/16W	RM73B--473JT
R901-904	247 2008 926	Carbon chip 2.2 kohm 1/16W	RM73B--222JT
R907	247 2014 907	Carbon chip 560 kohm 1/16W	RM73B--564JT
R909	247 2004 904	Carbon chip 39 ohm 1/16W	RM73B--390JT
			For E2,E1,E1H,E1C,EUT
R910	247 2007 943	Carbon chip 1 kohm 1/16W	RM73B--102JT
R911	247 2010 969	Carbon chip 22 kohm 1/16W	RM73B--223JT
R912	247 2008 971	Carbon chip 3.6 kohm 1/16W	RM73B--362JT
R913	247 2014 907	Carbon chip 560 kohm 1/16W	RM73B--564JT
R914	247 2013 982	Carbon chip 470 kohm 1/16W	RM73B--474JT
R915	247 2007 943	Carbon chip 1 kohm 1/16W	RM73B--102JT
R916	247 2009 983	Carbon chip 10 kohm 1/16W	RM73B--103JT
R917	247 2013 982	Carbon chip 470 kohm 1/16W	RM73B--474JT
R918	247 2007 943	Carbon chip 1 kohm 1/16W	RM73B--102JT
R919	247 2009 983	Carbon chip 10 kohm 1/16W	RM73B--103JT
R920	247 2013 982	Carbon chip 470 kohm 1/16W	RM73B--474JT
R921	247 2007 943	Carbon chip 1 kohm 1/16W	RM73B--102JT
R922	247 2009 983	Carbon chip 10 kohm 1/16W	RM73B--103JT
R923	247 2013 982	Carbon chip 470 kohm 1/16W	RM73B--474JT
R924	247 2007 943	Carbon chip 1 kohm 1/16W	RM73B--102JT
R925	247 2009 983	Carbon chip 10 kohm 1/16W	RM73B--103JT
R926	247 2013 982	Carbon chip 470 kohm 1/16W	RM73B--474JT
R927	247 2007 943	Carbon chip 1 kohm 1/16W	RM73B--102JT
R928	247 2009 983	Carbon chip 10 kohm 1/16W	RM73B--103JT
R929	247 2013 982	Carbon chip 470 kohm 1/16W	RM73B--474JT
R930	247 2007 943	Carbon chip 1 kohm 1/16W	RM73B--102JT
R931	247 2009 983	Carbon chip 10 kohm 1/16W	RM73B--103JT
R932	241 2387 940	Carbon film 4.7 ohm 1/4W(NB)	RD14B2E4R7JNBST
R933	247 2010 956	Carbon chip 20 kohm 1/16W	RM73B--203JT
R934	244 2055 996	Metal oxide 1.2 kohm 1W	RS14B3A122JNBST(S)
R935	247 2010 956	Carbon chip 20 kohm 1/16W	RM73B--203JT
R936	241 2398 913	Carbon film 680 ohm 1/4W	RD14B2E681JT(5)
			For E2,E1,E1H,E1C,EUT
R939,940	244 2055 996	Metal oxide 1.2 kohm 1W	RS14B3A122JNBST(S)
R972	247 2013 982	Carbon chip 470 kohm 1/16W	RM73B--474JT
R973	247 2007 943	Carbon chip 1 kohm 1/16W	RM73B--102JT
R974	247 2009 983	Carbon chip 10 kohm 1/16W	RM73B--103JT

Downloaded from www.Manualslib.com manuals search engine

Ref. No.	Part No.	Part Name	Remarks
CAPACITORS GROUP			
C101,102	254 4524 956	Electrolytic 2.2 uF/50V	CE04W1H2R2MT SMG/RE3
C105,106	254 4524 969	Electrolytic 3.3 uF/50V	CE04W1H3R3MT SMG/RE3
C107,108	256 1058 942	Metalized 0.056 uF/50V	CF93A1H563JT (JL)
C109,110	255 1265 907	Mylar film 6800 pF/50V	CQ93M1H682JT(B)
C111,112	257 0506 951	Ceramic chip 100 pF/50V	CC73CH1H101JT
C113,114	255 1265 949	Mylar film 0.012 uF/50V	CQ93M1H123JT(B)
C115,116	255 1264 953	Mylar film 2700 pF/50V	CQ93M1H272JT(B)
C117,118	254 4524 972	Electrolytic 4.7 uF/50V	CE04W1H4R7MT SMG/RE3
			For EU,982,EC,
			E1,E1H,E1C,EUT
	254 4538 939	Electrolytic 47 uF/16V	CE04W1C470MT SMG/RE3
			For E2
C119,120	255 1265 978	Mylar film 0.022 uF/50V	CQ93M1H223JT(B)
C121,122	254 4524 943	Electrolytic 1 uF/50V	CE04W1H010MT SMG/RE3
C309	257 0509 929	Ceramic chip 1000 pF/50V	CK73B1H102KT
C310-312	254 4524 998	Electrolytic 22 uF/50V	CE04W1H220MT SMG/RE3
C314	257 0504 982	Ceramic chip 47 pF/50V	CC73CH1H470JT
C320	254 4524 998	Electrolytic 22 uF/50V	CE04W1H220MT SMG/RE3
C323	254 4524 943	Electrolytic 1 uF/50V	CE04W1H010MT SMG/RE3
C324	254 4524 943	Electrolytic 1 uF/50V	CE04W1H010MT SMG/RE3
C343,344	257 0507 976	Ceramic chip 330 pF/50V	CC73CH1H331JT
			For E2,E1,E1H,E1C,EUT
C345,346	254 4524 985	Electrolytic 10 uF/50V	CE04W1H100MT SMG/RE3
C349,350	254 4524 998	Electrolytic 22 uF/50V	CE04W1H220MT SMG/RE3
C351,352	254 4524 943	Electrolytic 1 uF/50V	CE04W1H010MT SMG/RE3
C355,356	257 0507 976	Ceramic chip 330 pF/50V	CC73CH1H331JT
			For E2,E1,E1H,E1C,EUT
C367,368	257 0507 976	Ceramic chip 330 pF/50V	CC73CH1H331JT
			For E2,E1,E1H,E1C,EUT
C379-382	256 1058 955	Metalized 0.068 uF/50V	CF93A1H683JT (JL)
C385,386	254 4524 943	Electrolytic 1 uF/50V	CE04W1H010MT SMG/RE3
C387,388	254 4524 985	Electrolytic 10 uF/50V	CE04W1H100MT SMG/RE3
C389,390	254 4524 943	Electrolytic 1 uF/50V	CE04W1H010MT SMG/RE3
C391,392	254 4524 998	Electrolytic 22 uF/50V	CE04W1H220MT SMG/RE3
C395,396	257 0504 982	Ceramic chip 47 pF/50V	CC73CH1H470JT
C397,398	254 4524 998	Electrolytic 22 uF/50V	CE04W1H220MT SMG/RE3
C401,402	254 4524 943	Electrolytic 1 uF/50V	CE04W1H010MT SMG/RE3
C405	257 0504 908	Ceramic chip 22 pF/50V	CC73CH1H220JT
C408	254 4524 998	Electrolytic 22 uF/50V	CE04W1H220MT SMG/RE3
C409	257 0512 903	Ceramic chip 0.1 uF/25V	CK73F1E104ZT
C410,411	254 4524 943	Electrolytic 1 uF/50V	CE04W1H010MT SMG/RE3
C416	254 4524 943	Electrolytic 1 uF/50V	CE04W1H010MT SMG/RE3
C502-504	257 0512 903	Ceramic chip 0.1 uF/25V	CK73F1E104ZT
C505-507	254 4541 939	Electrolytic 47 uF/25V	CE04W1E470MT SMG/RE3
C509	257 0512 903	Ceramic chip 0.1 uF/25V	CK73F1E104ZT
C510	254 4524 969	Electrolytic 3.3 uF/50V	CE04W1H3R3MT SMG/RE3
C514	257 0506 993	Ceramic chip 150 pF/50V	CC73CH1H151JT
C516	257 0511 904	Ceramic chip 0.01 uF/50V	CK73F1H103ZT

Ref. No.	Part No.	Part Name	Remarks
C517	254 4524 985	Electrolytic 10 uF/50V	CE04W1H100MT SMG/RE3
C518,519	257 0511 904	Ceramic chip 0.01 uF/50V	CK73F1H103ZT
C703,704	257 0507 934	Ceramic chip 220 pF/50V	CC73CH1H221JT
C705,706	254 4524 985	Electrolytic 10 uF/50V	CE04W1H100MT SMG/RE3
C707,708	257 0506 951	Ceramic chip 100 pF/50V	CC73CH1H101JT
C709,710	254 4536 931	Electrolytic 220 uF/10V	CE04W1A221MT SMG/RE3
C711,712	255 4199 999	Mylar film 0.024 uF/50V	CQ92M1H243JT(MRZ)
C713,714	255 1265 907	Mylar film 6800 pF/50V	CQ93M1H682JT(B)
C715,716	254 4524 985	Electrolytic 10 uF/50V	CE04W1H100MT SMG/RE3
C717,718	254 4524 943	Electrolytic 1 uF/50V	CE04W1H010MT SMG/RE3
C719,720	257 0507 976	Ceramic chip 330 pF/50V	CC73CH1H331JT
			For E2,E1,E1H,E1C,EUT
C722	257 0512 903	Ceramic chip 0.1 uF/25V	CK73F1E104ZT
C723	254 4541 939	Electrolytic 47 uF/25V	CE04W1E470MT SMG/RE3
C724	257 0512 903	Ceramic chip 0.1 uF/25V	CK73F1E104ZT
C741	257 0512 903	Ceramic chip 0.1 uF/25V	CK73F1E104ZT
C742	257 0512 903	Ceramic chip 0.1 uF/25V	CK73F1E104ZT
C801,802	254 4524 985	Electrolytic 10 uF/50V	CE04W1H100MT SMG/RE3
C809,810	255 1265 923	Mylar film 8200 pF/50V	CQ93M1H822JT(B)
C811,812	254 4524 943	Electrolytic 1 uF/50V	CE04W1H010MT SMG/RE3
C815,816	254 4524 985	Electrolytic 10 uF/50V	CE04W1H100MT SMG/RE3
C823	255 1265 923	Mylar film 8200 pF/50V	CQ93M1H822JT(B)
C825,826	254 4524 943	Electrolytic 1 uF/50V	CE04W1H010MT SMG/RE3
C829,830	254 4524 985	Electrolytic 10 uF/50V	CE04W1H100MT SMG/RE3
C837,838	254 4524 943	Electrolytic 1 uF/50V	CE04W1H010MT SMG/RE3
C841,842	254 4524 985	Electrolytic 10 uF/50V	CE04W1H100MT SMG/RE3
C849,850	254 4524 943	Electrolytic 1 uF/50V	CE04W1H010MT SMG/RE3
C853	257 0509 929	Ceramic chip 1000 pF/50V	CK73B1H102KT
			For E2,E1,E1H,E1C,EUT
C860	254 4524 943	Electrolytic 1 uF/50V	CE04W1H010MT SMG/RE3
C861,862	254 4524 998	Electrolytic 22 uF/50V	CE04W1H220MT SMG/RE3
			For EU,982,EC,
			E1,E1H,E1C,EUT
	254 4538 939	Electrolytic 47 uF/16V	CE04W1C470MT SMG/RE3
			For E2
C863,864	254 4524 943	Electrolytic 1 uF/50V	CE04W1H010MT SMG/RE3
C869-871	254 4525 900	Electrolytic 33 uF/50V	CE04W1H330MT SMG/RE3
			For EU,982,EC
	254 4541 942	Electrolytic 100 uF/25V	CE04W1E101MT SMG/RE3
			For E2
	254 4541 939	Electrolytic 47 uF/25V	CE04W1E470MT SMG/RE3
			For E1,E1H,E1C,EUT
C873,874	254 4525 900	Electrolytic 33 uF/50V	CE04W1H330MT SMG/RE3
			For EU,982,EC
	254 4541 942	Electrolytic 100 uF/25V	CE04W1E101MT SMG/RE3
			For E2
	254 4541 939	Electrolytic 47 uF/25V	CE04W1E470MT SMG/RE3
			For E1,E1H,E1C,EUT
C881,882	254 4524 943	Electrolytic 1 uF/50V	CE04W1H010MT SMG/RE3
C883-888	254 4524 998	Electrolytic 22 uF/50V	CE04W1H220MT SMG/RE3

Downloaded from www.Manualslib.com manuals search engine

Ref. No.	Part No.	Part Name	Remarks
C896,897	254 4525 900	Electrolytic 33 uF/50V	CE04W1H330MT SMG/RE3 For EU,982,EC
	254 4541 942	Electrolytic 100 uF/25V	CE04W1E101MT SMG/RE3 For E2
	254 4541 939	Electrolytic 47 uF/25V	CE04W1E470MT SMG/RE3 For E1,E1H,E1C,EUT
C901	253 1181 904	Ceramic 0.01 uF/50V	CK45F1H103ZT(DD-3)
C902	254 4524 956	Electrolytic 2.2 uF/50V	CE04W1H2R2MT SMG/RE3
C903	253 1181 904	Ceramic 0.01 uF/50V	CK45F1H103ZT(DD-3)
C909	254 4524 943	Electrolytic 1 uF/50V	CE04W1H010MT SMG/RE3
C911	254 4527 908	Electrolytic 0.1 uF/100V	CE04W2A0R1MT SMG/RE3
C912	254 4524 985	Electrolytic 10 uF/50V	CE04W1H100MT SMG/RE3
C913,914	254 4524 901	Electrolytic 0.1 uF/50V	CE04W1H0R1MT SMG/RE3
C915	254 4524 901	Electrolytic 0.1 uF/50V	CE04W1H0R1MT SMG/RE3
C916-918	254 4524 901	Electrolytic 0.1 uF/50V	CE04W1H0R1MT SMG/RE3
C919	254 4522 958	Electrolytic 100 uF/35V	CE04W1V101MT SMG/RE3
C964	254 4524 901	Electrolytic 0.1 uF/50V	CE04W1H0R1MT SMG/RE3
OTHER PARTS GROUP			**Q'ty**
CW094	205 0885 037	9P connector socket (TUC-P)	1
CW102,103	205 0885 053	10P connector socket (TUC-P)	2
CW113-116	205 1092 023	11P connector plug (TWG-P)	4
CW119	205 0885 066	11P connector socket (TUC-P)	1
CW124	205 0885 079	12P connector socket (TUC-P)	1
CW131,132	205 1092 036	13P connector plug (TWG-P)	2
CW152	205 0885 040	15P connector socket (TUC-P)	1
CW191,192	205 1092 007	19P connector plug (TWG-P)	2
CX045	205 0884 083	4P connector base (TUC-P)	1
CX115	205 1091 024	11P connector base (TWG-P)	1
CX125	205 0884 070	12P connector base (TUC-P)	1
CX132	205 1091 037	13P connector base (TWG-P)	1
FB504-508	247 2018 903	Carbon chip 0 ohm 1/16W	RM73B--0R0KT 5
FB701	247 2018 903	Carbon chip 0 ohm 1/16W	RM73B--0R0KT 1
JK301	204 8513 010	6P pin jack (S-GND)	1
JK701	204 8545 004	4P pin jack (GND)	1
JK702	204 8593 001	1P pin jack (OR,NI)	1
L502	235 0060 918	Inductor 4.7uH	1
L503	235 0060 905	Inductor 2.2uH	1
L504,505	235 0060 918	Inductor 4.7uH	2
L701,702	235 9003 002	FTZ choke coil	For E2,EUT 2
RL901	214 0203 008	Relay (NA12W-K)	1
W708,709	205 1034 010	M3 Screw terminal	2
W726	203 0525 003	1P SIN cord Ass'y	1
W731	203 0463 000	1P SIN con. Ass'y	1

1U-3370 CONTROL UNIT ASS'Y

Ref. No.	Part No.	Part Name	Remarks
SEMICONDUCTORS GROUP			
IC101	262 2549 002	IC LC75721E	
IC102	499 0290 007	Remote sensor GP1U271X	
IC103	262 2745 903	IC BU2090F	
IC105	262 2547 907	IC LC72720NM	For E2
IC303	262 2982 009	IC TMP88CU74F	
IC304,305	263 1040 903	IC BU4094BCF	
TR111	269 0083 901	Transistor DTA114EK	
TR112	269 0055 900	Transistor DTA144EK	
TR113-115	269 0054 901	Transistor DTC144EK	
TR116,117	269 0055 900	Transistor DTA144EK	
TR118	269 0082 902	Transistor DTC114EK	
TR301	274 0163 904	Transistor 2SD601A	
TR302	271 0299 905	Transistor 2SA933S(S)	
TR303	269 0054 901	Transistor DTC144EK	
TR304	269 0082 902	Transistor DTC114EK	
TR305	269 0055 900	Transistor DTA144EK	
TR306	269 0054 901	Transistor DTC144EK	
TR307	269 0083 901	Transistor DTA114EK	
TR308,309	269 0054 901	Transistor DTC144EK	
TR401	269 0082 902	Transistor DTC114EK	
TR402	269 0086 908	Transistor DTA114TK	
TR403,404	269 0066 902	Transistor DTC323TK	
TR405	269 0082 902	Transistor DTC114EK	
TR406	273 0384 900	Transistor 2SC2412K(S)	For E2
D104	276 0468 906	Zener diode HZS9B-1TD	
D109-111	276 0432 903	Diode 1SS270A	
D302	276 0432 903	Diode 1SS270A	
D303	276 0454 910	Zener diode HZS3C-2TD	
D304	276 0432 903	Diode 1SS270A	
D305,306	276 0704 903	Diode 1SR35-400A(T93X)	
D401	276 0432 903	Diode 1SS270A	
LD102-107	393 9434 906	LED SEL1210S	
LD109,110	393 9434 906	LED SEL1210S	
LD113,114	393 9452 904	LED SEL1410E	
RESISTORS GROUP			
R101	247 2005 903	Carbon chip 100 ohm 1/16W	RM73B--101JT
R102,103	247 2006 960	Carbon chip 470 ohm 1/16W	RM73B--471JT
R104-107	247 2007 927	Carbon chip 820 ohm 1/16W	RM73B--821JT
R109,110	247 2007 927	Carbon chip 820 ohm 1/16W	RM73B--821JT
R111	247 2005 903	Carbon chip 100 ohm 1/16W	RM73B--101JT
R112	247 2007 943	Carbon chip 1 kohm 1/16W	RM73B--102JT
R113	247 2005 974	Carbon chip 200 ohm 1/16W	RM73B--201JT

Downloaded from www.Manualslib.com manuals search engine

Ref. No.	Part No.	Part Name	Remarks
R114	247 2006 928	Carbon chip 300 ohm 1/16W	RM73B--301JT
R115	247 2006 973	Carbon chip 510 ohm 1/16W	RM73B--511JT
R116	247 2007 943	Carbon chip 1 kohm 1/16W	RM73B--102JT
R117-119	247 2008 955	Carbon chip 3 kohm 1/16W	RM73B--302JT
R120,121	247 2007 901	Carbon chip 680 ohm 1/16W	RM73B--681JT
R123,124	247 2010 956	Carbon chip 20 kohm 1/16W	RM73B--203JT
R125	247 2007 943	Carbon chip 1 kohm 1/16W	RM73B--102JT
R126	247 2005 974	Carbon chip 200 ohm 1/16W	RM73B--201JT
R127	247 2006 928	Carbon chip 300 ohm 1/16W	RM73B--301JT
R128	247 2006 973	Carbon chip 510 ohm 1/16W	RM73B--511JT
R129	247 2007 943	Carbon chip 1 kohm 1/16W	RM73B--102JT
R139	247 2007 943	Carbon chip 1 kohm 1/16W	RM73B--102JT
R140	247 2005 903	Carbon chip 100 ohm 1/16W	RM73B--101JT
R141,142	247 2009 909	Carbon chip 4.7 kohm 1/16W	RM73B--472JT (1608)
R153-155	247 2011 984	Carbon chip 68 kohm 1/16W	RM73B--683JT
R156,157	247 2005 903	Carbon chip 100 ohm 1/16W	RM73B--101JT
R158,159	247 2011 984	Carbon chip 68 kohm 1/16W	RM73B--683JT
R160	247 2009 909	Carbon chip 4.7 kohm 1/16W	RM73B--472JT (1608)
R162-170	247 2011 984	Carbon chip 68 kohm 1/16W	RM73B--683JT
R171	247 2009 909	Carbon chip 4.7 kohm 1/16W	RM73B--472JT (1608)
R173,174	247 2011 984	Carbon chip 68 kohm 1/16W	RM73B--683JT
R175,176	247 2011 942	Carbon chip 47 kohm 1/16W	RM73B--473JT
R177-181	247 2011 984	Carbon chip 68 kohm 1/16W	RM73B--683JT
R182	247 2009 983	Carbon chip 10 kohm 1/16W	RM73B--103JT
R183-212	247 2011 984	Carbon chip 68 kohm 1/16W	RM73B--683JT
R213	247 2011 942	Carbon chip 47 kohm 1/16W	RM73B--473JT
R302-307	247 2009 983	Carbon chip 10 kohm 1/16W	RM73B--103JT
R308	247 2005 903	Carbon chip 100 ohm 1/16W	RM73B--101JT
R309,310	247 2009 983	Carbon chip 10 kohm 1/16W	RM73B--103JT
R311	247 2007 943	Carbon chip 1 kohm 1/16W	RM73B--102JT
R312	247 2009 983	Carbon chip 10 kohm 1/16W	RM73B--103JT
R313	247 2007 943	Carbon chip 1 kohm 1/16W	RM73B--102JT
			For E2
R314,315	247 2009 983	Carbon chip 10 kohm 1/16W	RM73B--103JT
R316	247 2005 903	Carbon chip 100 ohm 1/16W	RM73B--101JT
R318	247 2005 903	Carbon chip 100 ohm 1/16W	RM73B--101JT
R320	247 2005 903	Carbon chip 100 ohm 1/16W	RM73B--101JT
R321	247 2009 983	Carbon chip 10 kohm 1/16W	RM73B--103JT
R324-326	247 2009 909	Carbon chip 4.7 kohm 1/16W	RM73B--472JT (1608)
R327	247 2009 983	Carbon chip 10 kohm 1/16W	RM73B--103JT
R329	247 2009 983	Carbon chip 10 kohm 1/16W	RM73B--103JT
R330	247 2005 903	Carbon chip 100 ohm 1/16W	RM73B--101JT
R331	247 2009 983	Carbon chip 10 kohm 1/16W	RM73B--103JT
R333,334	247 2009 983	Carbon chip 10 kohm 1/16W	RM73B--103JT
R335	247 2011 942	Carbon chip 47 kohm 1/16W	RM73B--473JT
R340	247 2009 909	Carbon chip 4.7 kohm 1/16W	RM73B--472JT (1608)
R341,342	247 2009 983	Carbon chip 10 kohm 1/16W	RM73B--103JT
R343,344	247 2005 903	Carbon chip 100 ohm 1/16W	RM73B--101JT
R345	247 2018 903	Carbon chip 0 ohm 1/16W	RM73B--0R0KT
R346	247 2005 903	Carbon chip 100 ohm 1/16W	RM73B--101JT

Ref. No.	Part No.	Part Name	Remarks
	247 2018 903	Carbon chip 0 ohm 1/16W	RM73B--0R0KT
			For E2
	247 2007 943	Carbon chip 1 kohm 1/16W	RM73B--102JT
			For E1,E1H
	247 2009 909	Carbon chip 4.7 kohm 1/16W	RM73B--472JT (1608)
			For E1C,EUT
R348	247 2018 903	Carbon chip 0 ohm 1/16W	RM73B--0R0KT
			For EU,982,EC
	247 2009 912	Carbon chip 5.1 kohm 1/16W	RM73B--512JT
			For E1,E1H
	247 2009 909	Carbon chip 4.7 kohm 1/16W	RM73B--472JT (1608)
			For E1C,EUT
R349	247 2018 903	Carbon chip 0 ohm 1/16W	RM73B--0R0KT
R350	247 2009 983	Carbon chip 10 kohm 1/16W	RM73B--103JT
R351,352	247 2012 925	Carbon chip 100 kohm 1/16W	RM73B--104JT
R354	247 2013 908	Carbon chip 220 kohm 1/16W	RM73B--224JT
R355	247 2012 925	Carbon chip 100 kohm 1/16W	RM73B--104JT
R356	247 2009 983	Carbon chip 10 kohm 1/16W	RM73B--103JT
R357-360	247 2012 925	Carbon chip 100 kohm 1/16W	RM73B--104JT
R361,362	247 2009 909	Carbon chip 4.7 kohm 1/16W	RM73B--472JT (1608)
R363-365	247 2005 903	Carbon chip 100 ohm 1/16W	RM73B--101JT
R366,367	247 2009 983	Carbon chip 10 kohm 1/16W	RM73B--103JT
R368	247 2007 943	Carbon chip 1 kohm 1/16W	RM73B--102JT
R372	247 2007 943	Carbon chip 1 kohm 1/16W	RM73B--102JT
R373	247 2007 943	Carbon chip 1 kohm 1/16W	RM73B--102JT
			For EU,982,EC
	247 2009 983	Carbon chip 10 kohm 1/16W	RM73B--103JT
			For E2,E1,E1H,E1C,EUT
R374	247 2009 983	Carbon chip 10 kohm 1/16W	RM73B--103JT
			For EU,982,EC
	247 2012 925	Carbon chip 100 kohm 1/16W	RM73B--104JT
			For E2,E1,E1H,E1C,EUT
R375	241 2387 908	Carbon film 1 ohm 1/4W(NB)	RD14B2E010JNBST
R376	247 2009 983	Carbon chip 10 kohm 1/16W	RM73B--103JT
R378	247 2009 983	Carbon chip 10 kohm 1/16W	RM73B--103JT
R379	247 2008 926	Carbon chip 2.2 kohm 1/16W	RM73B--222JT
R380-383	247 2009 983	Carbon chip 10 kohm 1/16W	RM73B--103JT
R384	247 2007 972	Carbon chip 1.3 kohm 1/16W	RM73B--132JT
			For E1,E1H
R385	247 2018 903	Carbon chip 0 ohm 1/16W	RM73B--0R0KT
R387	247 2018 903	Carbon chip 0 ohm 1/16W	RM73B--0R0KT
R390	247 2009 983	Carbon chip 10 kohm 1/16W	RM73B--103JT
R391,392	247 2007 943	Carbon chip 1 kohm 1/16W	RM73B--102JT
R393,394	247 2012 925	Carbon chip 100 kohm 1/16W	RM73B--104JT
R401	247 2002 964	Carbon chip 10 ohm 1/16W	RM73B--100JT
			For E2
R402,403	247 2009 983	Carbon chip 10 kohm 1/16W	RM73B--103JT
			For E2
R404	247 2008 913	Carbon chip 2 kohm 1/16W	RM73B--202JT
R406	247 2009 983	Carbon chip 10 kohm 1/16W	RM73B--103JT
			For E2

Downloaded from www.Manualslib.com manuals search engine

Ref. No.	Part No.	Part Name	Remarks
R407	247 2009 909	Carbon chip 4.7 kohm 1/16W	RM73B--472JT (1608) For E2
CAPACITORS GROUP			
C102	257 0512 903	Ceramic chip 0.1 uF/25V	CK73F1E104ZT
C103	254 4193 905	Electrolytic 10 uF/16V	CE04W1C100MT (SRA)
C104	254 4196 944	Electrolytic 1 uF/50V	CE04W1H010MT (SRA)
C107	256 1058 971	Metalized 0.1 uF/50V	CF93A1H104JT (JL)
C109	254 4196 999	Electrolytic 22 uF/50V	CE04W1H220MT (SRA)
C110-113	257 0511 904	Ceramic chip 0.01 uF/50V	CK73F1H103ZT
C115	257 0511 904	Ceramic chip 0.01 uF/50V	CK73F1H103ZT
C117	257 0509 929	Ceramic chip 1000 pF/50V	CK73B1H102KT
C120	257 0504 937	Ceramic chip 30 pF/50V	CC73CH1H300JT
C121	254 4193 905	Electrolytic 10 uF/16V	CE04W1C100MT (SRA)
C122	257 0511 917	Ceramic chip 0.022 uF/50V	CK73F1H223ZT
C125	257 0511 904	Ceramic chip 0.01 uF/50V	CK73F1H103ZT
C127	254 4525 926	Electrolytic 100 uF/50V	CE04W1H101MT SMG/RE3
C301	257 0509 929	Ceramic chip 1000 pF/50V	CK73B1H102KT
C304	257 0516 909	Ceramic chip 0.022 uF/25V	CK73B1E223KT For E1,E1H,E1C,EUT
C309	257 0516 909	Ceramic chip 0.022 uF/25V	CK73B1E223KT For EU,982,EC,E2
C313	257 0516 909	Ceramic chip 0.022 uF/25V	CK73B1E223KT
C318	257 0516 909	Ceramic chip 0.022 uF/25V	CK73B1E223KT For E1,E1H,E1C,EUT
C324	257 0516 909	Ceramic chip 0.022 uF/25V	CK73B1E223KT For EU,982,EC,E2
C339	254 4536 957	Electrolytic 470 uF/10V	CE04W1A471MT SMG/RE3
C340	257 0512 903	Ceramic chip 0.1 uF/25V	CK73F1E104ZT
C341	254 4538 939	Electrolytic 47 uF/16V	CE04W1C470MT SMG/RE3
C342	257 0511 920	Ceramic chip 0.047 uF/50V	CK73F1H473ZT
C348	254 4538 939	Electrolytic 47 uF/16V	CE04W1C470MT SMG/RE3
C349	257 0511 904	Ceramic chip 0.01 uF/50V	CK73F1H103ZT
C350	256 1058 984	Metalized 0.12 uF/50V	CF93A1H124JT (JL)
C352	254 4522 903	Electrolytic 4.7 uF/35V	CE04W1V4R7MT SMG/RE3
C353	257 0511 904	Ceramic chip 0.01 uF/50V	CK73F1H103ZT
C354	254 4213 937	Electrolytic 100 uF/6.3V	CE04W0J101MT (SRA)
C355	257 0511 904	Ceramic chip 0.01 uF/50V	CK73F1H103ZT
C357	254 4534 713	Electrolytic 3300 uF/6.3V	CE04W0J332MC SMG/RE3 For EU,982,EC
	259 0007 702	Back up cap. 8200 uF/5.5V	SB CAP==822=C For E2,E1,E1H,E1C,EUT
C358	257 0509 929	Ceramic chip 1000 pF/50V	CK73B1H102KT
C359	254 4533 934	Electrolytic 220 uF/6.3V	CE04W0J221MT SMG/RE3
C376	257 0509 929	Ceramic chip 1000 pF/50V	CK73B1H102KT
C377	254 4538 900	Electrolytic 10 uF/16V	CE04W1C100MT SMG/RE3
C378	257 0509 929	Ceramic chip 1000 pF/50V	CK73B1H102KT For EU,982,EC,E2
C380	257 0516 909	Ceramic chip 0.022 uF/25V	CK73B1E223KT
C390	256 1058 971	Metalized 0.1 uF/50V	CF93A1H104JT (JL)

Ref. No.	Part No.	Part Name	Remarks
C392	257 0509 929	Ceramic chip 1000 pF/50V	CK73B1H102KT For EU,982,EC,E2
C398	257 0506 951	Ceramic chip 100 pF/50V	CC73CH1H101JT
C400	254 4538 900	Electrolytic 10 uF/16V	CE04W1C100MT SMG/RE3
C401	257 0511 904	Ceramic chip 0.01 uF/50V	CK73F1H103ZT
C405	257 0516 909	Ceramic chip 0.022 uF/25V	CK73B1E223KT
C411,412	257 0504 924	Ceramic chip 27 pF/50V	CC73CH1H270JT For E2
C416	257 0516 909	Ceramic chip 0.022 uF/25V	CK73B1E223KT For EU,982,EC, E1,E1H,E1C,EUT
	257 0509 929	Ceramic chip 1000 pF/50V	CK73B1H102KT For E2
C417,418	254 4524 943	Electrolytic 1 uF/50V	CE04W1H010MT SMG/RE3 For E2
C419	254 4538 900	Electrolytic 10 uF/16V	CE04W1C100MT SMG/RE3 For E2
C420	257 0516 909	Ceramic chip 0.022 uF/25V	CK73B1E223KT For EU,982,EC
	257 0509 929	Ceramic chip 1000 pF/50V	CK73B1H102KT For E2
C421	257 0508 933	Ceramic chip 560 pF/50V	CC73CH1H561JT For E2
C423,424	254 4524 985	Electrolytic 10 uF/50V	CE04W1H100MT SMG/RE3
C492	257 0509 929	Ceramic chip 1000 pF/50V	CK73B1H102KT
C493	257 0507 976	Ceramic chip 330 pF/50V	CC73CH1H331JT For E2
C983	257 0516 909	Ceramic chip 0.022 uF/25V	CK73B1E223KT

OTHER PARTS GROUP			Q'ty
CW077	205 1000 015	7P FJ connector plug	1
CW142,143	205 1165 002	14P connector plug (TMC-D)	2
CX061	205 0943 018	6P connector base (TUC-P)	1
CX072	205 0943 021	7P connector base (TUC-P)	1
CX081,082	205 0884 096	8P connector base (TUC-P)	2
CX086	205 0884 096	8P connector base (TUC-P)	1
CX093,094	205 0884 038	9P connector base (TUC-P)	2
CX103	205 0884 054	10P connector base (TUC-P)	1
CX111	205 0884 067	11P connector base (TUC-P)	1
CX114	205 1091 024	11P connector base (TWG-P)	1
CX119	205 0884 067	11P connector base (TUC-P)	1
CX121,122	205 0884 070	12P connector base (TUC-P)	2
CX124	205 0884 070	12P connector base (TUC-P)	1
CX131	205 1091 037	13P connector base (TWG-P)	1
CX142,143	205 1164 003	14P connector socket (TMC-D)	2
CX151	205 0884 041	15P connector base (TUC-P)	1
CX152,153	205 0884 041	15P connector base (TUC-P)	2
CX192	205 1091 008	19P connector base (TWG-P)	1
CX932	205 1121 033	3P connector base-L (5268)	1

Downloaded from www.Manualslib.com manuals search engine

Ref. No.	Part No.	Part Name	Remarks	Q'ty
FB304,305	235 0049 900	Beads inductor		2
FL101	393 8033 007	FLD (CM1690C)		1
L101	235 0070 995	Inductor 220uH		1
L102	235 0070 953	Inductor 68uH		1
L308	247 2005 987	Carbon chip 220 ohm 1/16W	RM73B--221JT	1
L313-315	247 2005 987	Carbon chip 220 ohm 1/16W	RM73B--221JT	3
L319	247 2005 987	Carbon chip 220 ohm 1/16W	RM73B--221JT	1
S101-112	212 5611 903	Tact switch		12
S113	212 0373 000	Rotary encoder EC16B		1
S114	212 0422 003	Rotary encoder		1
S115	212 5611 903	Tact switch		1
W724	203 0526 002	1P contact ass'y		1
XL302	399 0532 902	Ceramic 12.5 MHz	CST12.5MTW-TF01	1
XL401	399 0178 007	Crystal 4.332 MHz	For E2	1

1U-3371 REGULATOR UNIT ASS'Y

Ref. No.	Part No.	Part Name	Remarks
SEMICONDUCTORS GROUP			
IC901,902	263 1100 005	IC KIA7805API	
IC905	263 1100 021	IC KIA7812API	
IC906	263 1099 022	IC KIA7912PI	
IC907	263 1100 005	IC KIA7805API	
IC909	263 1099 006	IC KIA7905PI	
TR501-504	273 0460 905	Transistor KTC2875B	
TR511-514	273 0460 905	Transistor KTC2875B	
TR521-524	273 0460 905	Transistor KTC2875B	
TR531-534	273 0460 905	Transistor KTC2875B	
TR541-544	273 0460 905	Transistor KTC2875B	
TR581,582	273 0429 904	Transistor 2SC3311A	
TR584	269 0020 906	Transistor DTC114ES(10K-10K)	
TR585,586	273 0429 904	Transistor 2SC3311A	
TR901	273 0429 904	Transistor 2SC3311A	
TR904	272 0158 007	Transistor 2SB/KTB778(R/O)	
TR918	272 0158 007	Transistor 2SB/KTB778(R/O)	
D903,904	276 0432 903	Diode 1SS270A	
D913-915	276 0305 001	Diode S4VB20	
D918,919	276 0432 903	Diode 1SS270A	
PT901	279 0034 054	Posistor PTH9M04BC222TS2F333	
RESISTORS GROUP			
R501-504	247 2006 960	Carbon chip 470 ohm 1/16W	RM73B--471JT
			For EU,982,EC
	247 2006 973	Carbon chip 510 ohm 1/16W	RM73B--511JT
			For E2,E1,E1H,E1C,EUT
R505,506	247 2012 925	Carbon chip 100 kohm 1/16W	RM73B--104JT
			For EU,982,EC
	247 2008 984	Carbon chip 3.9 kohm 1/16W	RM73B--392JT
			For E2,E1,E1H,E1C,EUT
R507,508	247 2009 983	Carbon chip 10 kohm 1/16W	RM73B--103JT
R509,510	247 2010 969	Carbon chip 22 kohm 1/16W	RM73B--223JT
R511	247 2006 960	Carbon chip 470 ohm 1/16W	RM73B--471JT
			For EU,982,EC
	247 2006 973	Carbon chip 510 ohm 1/16W	RM73B--511JT
			For E2,E1,E1H,E1C,EUT
R512	247 2006 960	Carbon chip 470 ohm 1/16W	RM73B--471JT
R513	247 2006 960	Carbon chip 470 ohm 1/16W	RM73B--471JT
			For EU,982,EC
	247 2006 973	Carbon chip 510 ohm 1/16W	RM73B--511JT
			For E2,E1,E1H,E1C,EUT
R514	247 2006 960	Carbon chip 470 ohm 1/16W	RM73B--471JT
R515	247 2012 925	Carbon chip 100 kohm 1/16W	RM73B--104JT
			For EU,982,EC
	247 2008 984	Carbon chip 3.9 kohm 1/16W	RM73B--392JT
			For E2,E1,E1H,E1C,EUT
R516	247 2012 925	Carbon chip 100 kohm 1/16W	RM73B--104JT
R517,518	247 2009 983	Carbon chip 10 kohm 1/16W	RM73B--103JT

Downloaded from www.Manualslib.com manuals search engine

Ref. No.	Part No.	Part Name	Remarks
R519,520	247 2010 969	Carbon chip 22 kohm 1/16W	RM73B--223JT
R521-524	247 2006 960	Carbon chip 470 ohm 1/16W	RM73B--471JT
			For EU,982,EC
	247 2006 973	Carbon chip 510 ohm 1/16W	RM73B--511JT
			For E2,E1,E1H,E1C,EUT
R525,526	247 2012 925	Carbon chip 100 kohm 1/16W	RM73B--104JT
			For EU,982,EC
	247 2008 984	Carbon chip 3.9 kohm 1/16W	RM73B--392JT
			For E2,E1,E1H,E1C,EUT
R527,528	247 2009 983	Carbon chip 10 kohm 1/16W	RM73B--103JT
R529,530	247 2010 969	Carbon chip 22 kohm 1/16W	RM73B--223JT
R531-534	247 2006 960	Carbon chip 470 ohm 1/16W	RM73B--471JT
			For EU,982,EC
	247 2006 973	Carbon chip 510 ohm 1/16W	RM73B--511JT
			For E2,E1,E1H,E1C,EUT
R535,536	247 2012 925	Carbon chip 100 kohm 1/16W	RM73B--104JT
			For EU,982,EC
	247 2008 984	Carbon chip 3.9 kohm 1/16W	RM73B--392JT
			For E2,E1,E1H,E1C,EUT
R537,538	247 2009 983	Carbon chip 10 kohm 1/16W	RM73B--103JT
R539,540	247 2010 969	Carbon chip 22 kohm 1/16W	RM73B--223JT
R541-544	247 2006 960	Carbon chip 470 ohm 1/16W	RM73B--471JT
R545,546	247 2012 925	Carbon chip 100 kohm 1/16W	RM73B--104JT
R547,548	247 2009 983	Carbon chip 10 kohm 1/16W	RM73B--103JT
R549,550	247 2010 969	Carbon chip 22 kohm 1/16W	RM73B--223JT
R551,552	247 2012 925	Carbon chip 100 kohm 1/16W	RM73B--104JT
			For EU,982,EC
	247 2009 909	Carbon chip 4.7 kohm 1/16W	RM73B--472JT (1608)
			For E2,E1,E1H,E1C,EUT
R553,554	247 2005 987	Carbon chip 220 ohm 1/16W	RM73B--221JT
R555	247 2012 925	Carbon chip 100 kohm 1/16W	RM73B--104JT
			For EU,982,EC
	247 2009 909	Carbon chip 4.7 kohm 1/16W	RM73B--472JT (1608)
			For E2,E1,E1H,E1C,EUT
R556	247 2012 925	Carbon chip 100 kohm 1/16W	RM73B--104JT
R557,558	247 2005 987	Carbon chip 220 ohm 1/16W	RM73B--221JT
R559,560	247 2012 925	Carbon chip 100 kohm 1/16W	RM73B--104JT
			For EU,982,EC
	247 2009 909	Carbon chip 4.7 kohm 1/16W	RM73B--472JT (1608)
			For E2,E1,E1H,E1C,EUT
R561,562	247 2005 987	Carbon chip 220 ohm 1/16W	RM73B--221JT
R563,564	247 2012 925	Carbon chip 100 kohm 1/16W	RM73B--104JT
			For EU,982,EC
	247 2009 909	Carbon chip 4.7 kohm 1/16W	RM73B--472JT (1608)
			For E2,E1,E1H,E1C,EUT
R565,566	247 2005 987	Carbon chip 220 ohm 1/16W	RM73B--221JT
R567,568	247 2012 925	Carbon chip 100 kohm 1/16W	RM73B--104JT
R569,570	247 2005 987	Carbon chip 220 ohm 1/16W	RM73B--221JT
R586-594	247 2018 903	Carbon chip 0 ohm 1/16W	RM73B--0R0KT
R910	241 2376 919	Carbon film 30 ohm 1/4W(NB)	RD14B2E300JNBST
R949	241 2376 919	Carbon film 30 ohm 1/4W(NB)	RD14B2E300JNBST

Ref. No.	Part No.	Part Name	Remarks
CAPACITORS GROUP			
C501-504	254 4538 913	Electrolytic 22 uF/16V	CE04W1C220MT SMG/RE3
			For EU,982,EC
	254 4538 942	Electrolytic 100 uF/16V	CE04W1C101MT SMG/RE3
			For E2,E1,E1H,E1C,EUT
C507	254 4524 943	Electrolytic 1 uF/50V	CE04W1H010MT SMG/RE3
C511	254 4538 913	Electrolytic 22 uF/16V	CE04W1C220MT SMG/RE3
			For EU,982,EC
	254 4538 942	Electrolytic 100 uF/16V	CE04W1C101MT SMG/RE3
			For E2,E1,E1H,E1C,EUT
C512	254 4538 913	Electrolytic 22 uF/16V	CE04W1C220MT SMG/RE3
C513	254 4538 913	Electrolytic 22 uF/16V	CE04W1C220MT SMG/RE3
			For EU,982,EC
	254 4538 942	Electrolytic 100 uF/16V	CE04W1C101MT SMG/RE3
			For E2,E1,E1H,E1C,EUT
C514	254 4538 913	Electrolytic 22 uF/16V	CE04W1C220MT SMG/RE3
C521-524	254 4538 913	Electrolytic 22 uF/16V	CE04W1C220MT SMG/RE3
			For EU,982,EC
	254 4538 942	Electrolytic 100 uF/16V	CE04W1C101MT SMG/RE3
			For E2,E1,E1H,E1C,EUT
C527	254 4524 943	Electrolytic 1 uF/50V	CE04W1H010MT SMG/RE3
C531-534	254 4538 913	Electrolytic 22 uF/16V	CE04W1C220MT SMG/RE3
			For EU,982,EC
	254 4538 942	Electrolytic 100 uF/16V	CE04W1C101MT SMG/RE3
			For E2,E1,E1H,E1C,EUT
C541-544	254 4538 913	Electrolytic 22 uF/16V	CE04W1C220MT SMG/RE3
C591,592	254 4524 943	Electrolytic 1 uF/50V	CE04W1H010MT SMG/RE3
C901	253 1181 904	Ceramic 0.01 uF/50V	CK45F1H103ZT(DD-3)
C902	254 4541 939	Electrolytic 47 uF/25V	CE04W1E470MT SMG/RE3
C903	254 4538 939	Electrolytic 47 uF/16V	CE04W1C470MT SMG/RE3
C904	253 9039 906	Ceramic 0.1 uF/25V	CK45=1E104ZT(DD-3)
C906	253 1181 904	Ceramic 0.01 uF/50V	CK45F1H103ZT(DD-3)
C908	254 4538 939	Electrolytic 47 uF/16V	CE04W1C470MT SMG/RE3
C910	253 1181 904	Ceramic 0.01 uF/50V	CK45F1H103ZT(DD-3)
C911	254 4538 939	Electrolytic 47 uF/16V	CE04W1C470MT SMG/RE3
C916,917	254 4541 939	Electrolytic 47 uF/25V	CE04W1E470MT SMG/RE3
C927	254 4472 707	Electrolytic 4700 uF/16V	CE04W1C472MC (SMG)
C930	253 1181 904	Ceramic 0.01 uF/50V	CK45F1H103ZT(DD-3)
C931	254 4406 702	Electrolytic 3300 uF/16V	CE04W1C332MC(SMG)
C934	254 4403 734	Electrolytic 4700 uF/25V	CE04W1E472MC(SMG)
C935	254 4403 718	Electrolytic 1000 uF/25V	CE04W1E102MC (SMG)
C936-939	256 1058 971	Metalized 0.1 uF/50V	CF93A1H104JT (JL)
C940,941	256 1058 971	Metalized 0.1 uF/50V	CF93A1H104JT (JL)
C942	254 4538 939	Electrolytic 47 uF/16V	CE04W1C470MT SMG/RE3
C948	254 4539 718	Electrolytic 2200 uF/16V	CE04W1C222MC SMG/RE3
C952	254 4524 943	Electrolytic 1 uF/50V	CE04W1H010MT SMG/RE3

Downloaded from www.Manualslib.com manuals search engine

Ref. No.	Part No.	Part Name	Remarks	Q'ty
OTHER PARTS GROUP				
CW045	205 0885 082	4P connector socket (TUC-P)		1
CW054-058	205 0885 008	5P connector socket (TUC-P)		5
CW076	205 0942 022	7P connector socket (TUC-P)		1
CW096	205 0885 037	9P connector socket (TUC-P)		1
CW125	205 0885 079	12P connector socket (TUC-P)		1
CW151	205 0885 040	15P connector socket (TUC-P)		1
CW154	205 0885 040	15P connector socket (TUC-P)		1
CX031	205 0321 038	3P connector base (KR-PH RED)		1
CX073	205 0343 074	7P connector base (KR-PH)		1
CX091	205 0233 090	9P EH connector base		1
CX113	205 1091 024	11P connector base (TWG-P)		1
CX116	205 1091 024	11P connector base (TWG-P)		1
CX154	205 0884 041	15P connector base (TUC-P)		1
CX159	205 0770 045	15P FFC base (SIDE)		1
CX191	205 1091 008	19P connector base (TWG-P)		1
CY021	205 0581 001	2P VH connector base	For E2,E1, E1H,E1C,EUT	1
⚠ F11-15	206 1039 076	Fuse 2.5A	For EU,982, EC,EUT	5
⚠	206 1015 032	Fuse 2.5A	For E2,E1, E1H,E1C	5
FF901-905	202 0040 909	Fuse clip		5
FH901-905	202 0040 909	Fuse clip		5
JK501	204 8543 006	6P pin jack		1
JK502	204 8540 009	4P pin jack		1
⚠ S901	212 1030 009	Power switch (TV-5)	For E2,E1, E1H,E1C,EUT	1
ST101	—	Style pin		1
ST501	205 1034 010	M3 Screw terminal		1
	415 0309 026	P.V.C. tube(L=20)	For PT901	1
	513 2585 074	Fuse label	For F11-15 For E2,E1,E1H,E1C	5

1U-3373 DSP/VIDEO UNIT ASS'Y

Ref. No.	Part No.	Part Name	Remarks
SEMICONDUCTORS GROUP			
IC107	262 2545 006	IC TC9274N-011	
IC108	262 2033 000	IC TC9273N-004	
IC109	263 0896 909	IC NJM2068MD	
IC112	263 0615 902	IC BA15218F	
IC251,252	262 2826 903	IC BU4051BCF	
IC253,254	263 1082 903	IC TK15420MTL	
IC255	262 2012 908	IC BU4052BCFT1	
IC256	262 2013 907	IC BU4053BCFT1	
IC257	263 1082 903	IC TK15420MTL	
IC301	262 2983 105	IC TMP93CS40F	
IC451	262 2827 902	IC MM74HC4053SJ	
IC452	263 0682 003	IC NJM2229S	
IC453	262 2808 002	IC M35015-210SP	
IC501-503	263 1082 903	IC TK15420MTL	
IC504-507	262 2826 903	IC BU4051BCF	
IC508	263 1082 903	IC TK15420MTL	
IC509,510	262 2012 908	IC BU4052BCFT1	
IC511	263 1082 903	IC TK15420MTL	
IC601	262 2747 901	IC AD1854JRSRL	
IC602	262 2950 002	IC AK4527BVQ	
IC701	263 0896 909	IC NJM2068MD	
IC721	263 0896 909	IC NJM2068MD	
IC741	263 0896 909	IC NJM2068MD	
IC761	263 0896 909	IC NJM2068MD	
IC800	262 2675 015	IC LC89055W	
IC801	262 2608 901	IC TC74VHC123AFT	
IC804	262 2870 904	IC 74LVX157MTC	
IC807	262 2519 906	IC SN74LV00APW-EL2	
IC809	262 2557 900	IC SN74LV14APW-EL2	
IC811,812	263 0934 900	IC BA4510F	
IC813	262 2781 909	IC SN74LV4040APW	
IC814	262 2949 903	IC CS493292-CL	
IC815,816	262 2660 907	IC SN74AHC574PW	
IC817	262 3010 006	IC AT49LV002-70TC	
IC818	262 2959 906	IC SN74LV244APW	
IC819	263 1048 002	IC BA033T	
IC823	262 2376 903	IC TC74HCT7007AF	
IC824	263 1129 905	IC NJM2391DL1	
IC825	262 2959 906	IC SN74LV244APW	
TR305	269 0082 902	Transistor DTC114EK	
TR453,454	269 0048 904	Transistor DTC143EK	
TR455,456	273 0384 900	Transistor 2SC2412K(S)	

Downloaded from www.Manualslib.com manuals search engine

Ref. No.	Part No.	Part Name	Remarks
TR501	271 0300 904	Transistor KTA1266GR	
TR502	269 0020 906	Transistor DTC114ES(10K-10K)	
TR503	269 0082 902	Transistor DTC114EK	
TR601	269 0083 901	Transistor DTA114EK	
TR602	269 0082 902	Transistor DTC114EK	
TR603-607	269 0083 901	Transistor DTA114EK	
TR701-704	273 0460 905	Transistor KTC2875B	
TR721-724	273 0460 905	Transistor KTC2875B	
TR741-744	273 0460 905	Transistor KTC2875B	
TR761-764	273 0460 905	Transistor KTC2875B	
D251,252	276 0559 909	Diode DAP202KT146	
D453	276 0560 901	Diode DAN202KT146	
D457,458	276 0559 909	Diode DAP202KT146	
D459	276 0559 909	Diode DAP202KT146	
D501,502	276 0559 909	Diode DAP202KT146	
D601	276 0560 901	Diode DAN202KT146	
D603	276 0560 901	Diode DAN202KT146	
RESISTORS GROUP			
R101,102	247 2005 903	Carbon chip 100 ohm 1/16W	RM73B--101JT For EU,982,EC
	247 2006 960	Carbon chip 470 ohm 1/16W	RM73B--471JT For E2,E1,E1H,E1C,EUT
R103,104	247 2015 964	Carbon chip 2.7 Mohm 1/16W	RM73B--275KT
R113,114	247 2005 903	Carbon chip 100 ohm 1/16W	RM73B--101JT For EU,982,EC
	247 2006 960	Carbon chip 470 ohm 1/16W	RM73B--471JT For E2,E1,E1H,E1C,EUT
R115,116	247 2015 964	Carbon chip 2.7 Mohm 1/16W	RM73B--275KT
R125,126	247 2005 903	Carbon chip 100 ohm 1/16W	RM73B--101JT For EU,982,EC
	247 2006 960	Carbon chip 470 ohm 1/16W	RM73B--471JT For E2,E1,E1H,E1C,EUT
R127,128	247 2015 964	Carbon chip 2.7 Mohm 1/16W	RM73B--275KT
R137,138	247 2005 903	Carbon chip 100 ohm 1/16W	RM73B--101JT For EU,982,EC
	247 2006 960	Carbon chip 470 ohm 1/16W	RM73B--471JT For E2,E1,E1H,E1C,EUT
R139,140	247 2015 964	Carbon chip 2.7 Mohm 1/16W	RM73B--275KT
R149,150	247 2005 903	Carbon chip 100 ohm 1/16W	RM73B--101JT For EU,982,EC
	247 2006 960	Carbon chip 470 ohm 1/16W	RM73B--471JT For E2,E1,E1H,E1C,EUT
R151,152	247 2015 964	Carbon chip 2.7 Mohm 1/16W	RM73B--275KT
R161,162	247 2005 903	Carbon chip 100 ohm 1/16W	RM73B--101JT For EU,982,EC

Ref. No.	Part No.	Part Name	Remarks
	247 2006 960	Carbon chip 470 ohm 1/16W	RM73B--471JT For E2,E1,E1H,E1C,EUT
R163,164	247 2015 964	Carbon chip 2.7 Mohm 1/16W	RM73B--275KT
R173,174	247 2015 964	Carbon chip 2.7 Mohm 1/16W	RM73B--275KT
R175,176	247 2006 960	Carbon chip 470 ohm 1/16W	RM73B--471JT
R177,178	247 2015 964	Carbon chip 2.7 Mohm 1/16W	RM73B--275KT
R179,180	247 2006 960	Carbon chip 470 ohm 1/16W	RM73B--471JT
R181,182	247 2015 964	Carbon chip 2.7 Mohm 1/16W	RM73B--275KT
R183,184	247 2006 960	Carbon chip 470 ohm 1/16W	RM73B--471JT
R187-190	247 2012 996	Carbon chip 200 kohm 1/16W	RM73B--204JT
R191,192	247 2005 903	Carbon chip 100 ohm 1/16W	RM73B--101JT
R195,196	247 2018 903	Carbon chip 0 ohm 1/16W	RM73B--0R0KT
R197-200	247 2005 903	Carbon chip 100 ohm 1/16W	RM73B--101JT
R201,202	247 2012 925	Carbon chip 100 kohm 1/16W	RM73B--104JT
R203-206	247 2012 996	Carbon chip 200 kohm 1/16W	RM73B--204JT
R207-210	247 2005 903	Carbon chip 100 ohm 1/16W	RM73B--101JT
R235,236	247 2018 903	Carbon chip 0 ohm 1/16W	RM73B--0R0KT
R251-255	247 2004 975	Carbon chip 75 ohm 1/16W	RM73B--750JT
R256-258	247 2010 969	Carbon chip 22 kohm 1/16W	RM73B--223JT
R259-261	247 2004 975	Carbon chip 75 ohm 1/16W	RM73B--750JT
R263	247 2005 903	Carbon chip 100 ohm 1/16W	RM73B--101JT
R264	247 2009 983	Carbon chip 10 kohm 1/16W	RM73B--103JT
R265	247 2006 973	Carbon chip 510 ohm 1/16W	RM73B--511JT
R266	247 2006 986	Carbon chip 560 ohm 1/16W	RM73B--561JT
R268	247 2002 964	Carbon chip 10 ohm 1/16W	RM73B--100JT
R269-271	247 2008 913	Carbon chip 2 kohm 1/16W	RM73B--202JT
R275-277	247 2009 983	Carbon chip 10 kohm 1/16W	RM73B--103JT
R278-280	247 2005 903	Carbon chip 100 ohm 1/16W	RM73B--101JT
R281	247 2009 983	Carbon chip 10 kohm 1/16W	RM73B--103JT
R282,283	247 2005 903	Carbon chip 100 ohm 1/16W	RM73B--101JT
R284	247 2009 983	Carbon chip 10 kohm 1/16W	RM73B--103JT
R285	247 2008 913	Carbon chip 2 kohm 1/16W	RM73B--202JT
R286	247 2006 973	Carbon chip 510 ohm 1/16W	RM73B--511JT
R287	247 2006 999	Carbon chip 620 ohm 1/16W	RM73B--621JT
R291	247 2009 983	Carbon chip 10 kohm 1/16W	RM73B--103JT
R292	247 2002 964	Carbon chip 10 ohm 1/16W	RM73B--100JT
R293	247 2018 903	Carbon chip 0 ohm 1/16W	RM73B--0R0KT
R301,302	247 2009 983	Carbon chip 10 kohm 1/16W	RM73B--103JT
R303	247 2003 989	Carbon chip 33 ohm 1/16W	RM73B--330JT
R304	247 2009 909	Carbon chip 4.7 kohm 1/16W	RM73B--472JT (1608)
R305,306	247 2003 989	Carbon chip 33 ohm 1/16W	RM73B--330JT
R307	247 2009 983	Carbon chip 10 kohm 1/16W	RM73B--103JT
R308	247 2003 989	Carbon chip 33 ohm 1/16W	RM73B--330JT
R309	247 2009 983	Carbon chip 10 kohm 1/16W	RM73B--103JT
R311,312	247 2003 989	Carbon chip 33 ohm 1/16W	RM73B--330JT
R313	247 2009 983	Carbon chip 10 kohm 1/16W	RM73B--103JT
R314-327	247 2003 989	Carbon chip 33 ohm 1/16W	RM73B--330JT
R328	247 2009 983	Carbon chip 10 kohm 1/16W	RM73B--103JT
R331	247 2018 903	Carbon chip 0 ohm 1/16W	RM73B--0R0KT
R334	247 2018 903	Carbon chip 0 ohm 1/16W	RM73B--0R0KT

Downloaded from www.Manualslib.com manuals search engine

Ref. No.	Part No.	Part Name	Remarks
R336	247 2009 983	Carbon chip 10 kohm 1/16W	RM73B--103JT
R337	247 2011 942	Carbon chip 47 kohm 1/16W	RM73B--473JT
R338	247 2009 983	Carbon chip 10 kohm 1/16W	RM73B--103JT
R342	247 2009 983	Carbon chip 10 kohm 1/16W	RM73B--103JT
R345,346	247 2018 903	Carbon chip 0 ohm 1/16W	RM73B--0R0KT
R348-351	247 2009 983	Carbon chip 10 kohm 1/16W	RM73B--103JT
R452	247 2018 903	Carbon chip 0 ohm 1/16W	RM73B--0R0KT
R453	247 2008 926	Carbon chip 2.2 kohm 1/16W	RM73B--222JT
R454	247 2007 943	Carbon chip 1 kohm 1/16W	RM73B--102JT
R455	247 2008 900	Carbon chip 1.8 kohm 1/16W	RM73B--182JT
R456	247 2002 964	Carbon chip 10 ohm 1/16W	RM73B--100JT
R457	247 2009 983	Carbon chip 10 kohm 1/16W	RM73B--103JT
R458	247 2007 943	Carbon chip 1 kohm 1/16W	RM73B--102JT
R459	247 2013 982	Carbon chip 470 kohm 1/16W	RM73B--474JT
R460	247 2011 900	Carbon chip 33 kohm 1/16W	RM73B--333JT
R461	247 2006 944	Carbon chip 390 ohm 1/16W	RM73B--391JT
R462	247 2007 985	Carbon chip 1.5 kohm 1/16W	RM73B--152JT
R463	247 2009 983	Carbon chip 10 kohm 1/16W	RM73B--103JT
R464	247 2011 955	Carbon chip 51 kohm 1/16W	RM73B--513JT
R465	247 2009 954	Carbon chip 7.5 kohm 1/16W	RM73B--752JT
R466	247 2018 903	Carbon chip 0 ohm 1/16W	RM73B--0R0KT
R468	247 2018 903	Carbon chip 0 ohm 1/16W	RM73B--0R0KT
R469-477	247 2012 925	Carbon chip 100 kohm 1/16W	RM73B--104JT
R478-480	247 2018 903	Carbon chip 0 ohm 1/16W	RM73B--0R0KT
R482	247 2018 903	Carbon chip 0 ohm 1/16W	RM73B--0R0KT
R483	247 2003 934	Carbon chip 20 ohm 1/16W	RM73B--200JT
R487	247 2018 903	Carbon chip 0 ohm 1/16W	RM73B--0R0KT
R488	247 2009 967	Carbon chip 8.2 kohm 1/16W	RM73B--822JT
R489	247 2009 983	Carbon chip 10 kohm 1/16W	RM73B--103JT
R490,491	247 2005 903	Carbon chip 100 ohm 1/16W	RM73B--101JT
R501	247 2004 975	Carbon chip 75 ohm 1/16W	RM73B--750JT
R502	247 2005 945	Carbon chip 150 ohm 1/16W	RM73B--151JT
R503	247 2004 975	Carbon chip 75 ohm 1/16W	RM73B--750JT
R504	247 2005 945	Carbon chip 150 ohm 1/16W	RM73B--151JT
R505	247 2004 975	Carbon chip 75 ohm 1/16W	RM73B--750JT
R506	247 2005 945	Carbon chip 150 ohm 1/16W	RM73B--151JT
R507	247 2004 975	Carbon chip 75 ohm 1/16W	RM73B--750JT
R508	247 2005 945	Carbon chip 150 ohm 1/16W	RM73B--151JT
R509	247 2004 975	Carbon chip 75 ohm 1/16W	RM73B--750JT
R510	247 2005 945	Carbon chip 150 ohm 1/16W	RM73B--151JT
R511-516	247 2010 969	Carbon chip 22 kohm 1/16W	RM73B--223JT
R517-522	247 2004 975	Carbon chip 75 ohm 1/16W	RM73B--750JT
R523-527	247 2005 945	Carbon chip 150 ohm 1/16W	RM73B--151JT
R529,530	247 2008 913	Carbon chip 2 kohm 1/16W	RM73B--202JT
R533,534	247 2009 983	Carbon chip 10 kohm 1/16W	RM73B--103JT
R535,536	247 2005 903	Carbon chip 100 ohm 1/16W	RM73B--101JT
R537,538	247 2008 913	Carbon chip 2 kohm 1/16W	RM73B--202JT
R541,542	247 2009 983	Carbon chip 10 kohm 1/16W	RM73B--103JT
R543,544	247 2005 903	Carbon chip 100 ohm 1/16W	RM73B--101JT
R545,546	247 2008 913	Carbon chip 2 kohm 1/16W	RM73B--202JT

Ref. No.	Part No.	Part Name	Remarks
R549,550	247 2009 983	Carbon chip 10 kohm 1/16W	RM73B--103JT
R551-554	247 2005 903	Carbon chip 100 ohm 1/16W	RM73B--101JT
R555,556	247 2009 983	Carbon chip 10 kohm 1/16W	RM73B--103JT
R557	247 2006 973	Carbon chip 510 ohm 1/16W	RM73B--511JT
R558	247 2006 960	Carbon chip 470 ohm 1/16W	RM73B--471JT
R559	247 2006 999	Carbon chip 620 ohm 1/16W	RM73B--621JT
R560	247 2006 986	Carbon chip 560 ohm 1/16W	RM73B--561JT
R563,564	247 2004 920	Carbon chip 47 ohm 1/16W	RM73B--470JT
R565,566	247 2006 986	Carbon chip 560 ohm 1/16W	RM73B--561JT
R569,570	247 2006 960	Carbon chip 470 ohm 1/16W	RM73B--471JT
R571,572	247 2009 983	Carbon chip 10 kohm 1/16W	RM73B--103JT
R573,574	247 2005 903	Carbon chip 100 ohm 1/16W	RM73B--101JT
R577-582	247 2009 983	Carbon chip 10 kohm 1/16W	RM73B--103JT
R583	247 2009 967	Carbon chip 8.2 kohm 1/16W	RM73B--822JT
R584	247 2007 969	Carbon chip 1.2 kohm 1/16W	RM73B--122JT
R585	247 2011 942	Carbon chip 47 kohm 1/16W	RM73B--473JT
R586	244 2052 960	Metal oxide 220 ohm 1W	RS14B3A221JNBST(S)
R587	247 2009 967	Carbon chip 8.2 kohm 1/16W	RM73B--822JT
R590,591	247 2009 909	Carbon chip 4.7 kohm 1/16W	RM73B--472JT (1608)
R592	247 2007 943	Carbon chip 1 kohm 1/16W	RM73B--102JT
R601-603	247 2018 903	Carbon chip 0 ohm 1/16W	RM73B--0R0KT
R604-606	247 2009 983	Carbon chip 10 kohm 1/16W	RM73B--103JT
R607-610	247 2018 903	Carbon chip 0 ohm 1/16W	RM73B--0R0KT
R612,613	247 2009 983	Carbon chip 10 kohm 1/16W	RM73B--103JT
R614,615	247 2018 903	Carbon chip 0 ohm 1/16W	RM73B--0R0KT
R618,619	247 2007 943	Carbon chip 1 kohm 1/16W	RM73B--102JT
R621	247 2018 903	Carbon chip 0 ohm 1/16W	RM73B--0R0KT
R624,625	247 2018 903	Carbon chip 0 ohm 1/16W	RM73B--0R0KT
R626	247 2005 903	Carbon chip 100 ohm 1/16W	RM73B--101JT
R627,628	247 2018 903	Carbon chip 0 ohm 1/16W	RM73B--0R0KT
R699,700	247 2009 912	Carbon chip 5.1 kohm 1/16W	RM73B--512JT
R701-704	247 2008 984	Carbon chip 3.9 kohm 1/16W	RM73B--392JT
R705,706	247 2009 912	Carbon chip 5.1 kohm 1/16W	RM73B--512JT
R707-710	247 2008 900	Carbon chip 1.8 kohm 1/16W	RM73B--182JT
R713,714	247 2006 986	Carbon chip 560 ohm 1/16W	RM73B--561JT
R715,716	247 2008 942	Carbon chip 2.7 kohm 1/16W	RM73B--272JT
R717,718	247 2012 925	Carbon chip 100 kohm 1/16W	RM73B--104JT
R719,720	247 2005 974	Carbon chip 200 ohm 1/16W	RM73B--201JT
R721,722	247 2012 925	Carbon chip 100 kohm 1/16W	RM73B--104JT
R723-730	247 2009 909	Carbon chip 4.7 kohm 1/16W	RM73B--472JT (1608)
R731,732	247 2007 927	Carbon chip 820 ohm 1/16W	RM73B--821JT
R733,734	247 2012 925	Carbon chip 100 kohm 1/16W	RM73B--104JT
R735,736	247 2018 903	Carbon chip 0 ohm 1/16W	RM73B--0R0KT
R737,738	247 2005 974	Carbon chip 200 ohm 1/16W	RM73B--201JT
R741,742	247 2012 925	Carbon chip 100 kohm 1/16W	RM73B--104JT
R743-750	247 2009 909	Carbon chip 4.7 kohm 1/16W	RM73B--472JT (1608)
R751,752	247 2007 927	Carbon chip 820 ohm 1/16W	RM73B--821JT
R753,754	247 2012 925	Carbon chip 100 kohm 1/16W	RM73B--104JT
R755,756	247 2018 903	Carbon chip 0 ohm 1/16W	RM73B--0R0KT
R757,758	247 2005 974	Carbon chip 200 ohm 1/16W	RM73B--201JT

Downloaded from www.Manualslib.com manuals search engine

Ref. No.	Part No.	Part Name	Remarks
R761,762	247 2012 925	Carbon chip 100 kohm 1/16W	RM73B--104JT
R763-770	247 2009 909	Carbon chip 4.7 kohm 1/16W	RM73B--472JT (1608)
R771,772	247 2007 927	Carbon chip 820 ohm 1/16W	RM73B--821JT
R773,774	247 2012 925	Carbon chip 100 kohm 1/16W	RM73B--104JT
R775,776	247 2018 903	Carbon chip 0 ohm 1/16W	RM73B--0R0KT
R777,778	247 2005 974	Carbon chip 200 ohm 1/16W	RM73B--201JT
R780	247 2011 942	Carbon chip 47 kohm 1/16W	RM73B--473JT
R781,782	247 2005 974	Carbon chip 200 ohm 1/16W	RM73B--201JT
R783-798	247 2011 900	Carbon chip 33 kohm 1/16W	RM73B--333JT
R799	247 2011 942	Carbon chip 47 kohm 1/16W	RM73B--473JT
R800-805	247 2009 983	Carbon chip 10 kohm 1/16W	RM73B--103JT
R806	247 2008 968	Carbon chip 3.3 kohm 1/16W	RM73B--332JT
R807,808	247 2009 983	Carbon chip 10 kohm 1/16W	RM73B--103JT
R810,811	247 2009 909	Carbon chip 4.7 kohm 1/16W	RM73B--472JT (1608)
R813	247 2009 983	Carbon chip 10 kohm 1/16W	RM73B--103JT
R815	247 2009 983	Carbon chip 10 kohm 1/16W	RM73B--103JT
R816	247 2018 903	Carbon chip 0 ohm 1/16W	RM73B--0R0KT
R817	247 2009 967	Carbon chip 8.2 kohm 1/16W	RM73B--822JT
R818	247 2008 955	Carbon chip 3 kohm 1/16W	RM73B--302JT
R819	247 2009 912	Carbon chip 5.1 kohm 1/16W	RM73B--512JT
R820	247 2004 975	Carbon chip 75 ohm 1/16W	RM73B--750JT
R822-825	247 2004 920	Carbon chip 47 ohm 1/16W	RM73B--470JT
R826,827	247 2009 909	Carbon chip 4.7 kohm 1/16W	RM73B--472JT (1608)
R828	247 2009 983	Carbon chip 10 kohm 1/16W	RM73B--103JT
R829	247 2011 900	Carbon chip 33 kohm 1/16W	RM73B--333JT
R830	247 2014 965	Carbon chip 1 Mohm 1/16W	RM73B--105JT
R831	247 2011 900	Carbon chip 33 kohm 1/16W	RM73B--333JT
R832	247 2014 965	Carbon chip 1 Mohm 1/16W	RM73B--105JT
R833,834	247 2005 903	Carbon chip 100 ohm 1/16W	RM73B--101JT
R835	247 2004 920	Carbon chip 47 ohm 1/16W	RM73B--470JT
R837,838	247 2009 909	Carbon chip 4.7 kohm 1/16W	RM73B--472JT (1608)
R839,840	247 2009 938	Carbon chip 6.2 kohm 1/16W	RM73B--622JT
R841,842	247 2011 942	Carbon chip 47 kohm 1/16W	RM73B--473JT
R843,844	247 2010 943	Carbon chip 18 kohm 1/16W	RM73B--183JT
R847,848	247 2009 909	Carbon chip 4.7 kohm 1/16W	RM73B--472JT (1608)
R849	247 2018 903	Carbon chip 0 ohm 1/16W	RM73B--0R0KT
R854	247 2018 903	Carbon chip 0 ohm 1/16W	RM73B--0R0KT
R856	247 2004 920	Carbon chip 47 ohm 1/16W	RM73B--470JT
R860	247 2004 920	Carbon chip 47 ohm 1/16W	RM73B--470JT
R863	247 2005 903	Carbon chip 100 ohm 1/16W	RM73B--101JT
R869-872	247 2009 909	Carbon chip 4.7 kohm 1/16W	RM73B--472JT (1608)
R873-876	247 2006 960	Carbon chip 470 ohm 1/16W	RM73B--471JT
R877-884	247 2012 925	Carbon chip 100 kohm 1/16W	RM73B--104JT
R896	247 2003 947	Carbon chip 22 ohm 1/16W	RM73B--220JT
R897	247 2007 943	Carbon chip 1 kohm 1/16W	RM73B--102JT
R898	247 2005 903	Carbon chip 100 ohm 1/16W	RM73B--101JT
R924	247 2009 909	Carbon chip 4.7 kohm 1/16W	RM73B--472JT (1608)
R925-948	247 2005 903	Carbon chip 100 ohm 1/16W	RM73B--101JT
R949	247 2018 903	Carbon chip 0 ohm 1/16W	RM73B--0R0KT
R951	247 2018 903	Carbon chip 0 ohm 1/16W	RM73B--0R0KT

Ref. No.	Part No.	Part Name	Remarks
R955-957	247 2004 920	Carbon chip 47 ohm 1/16W	RM73B--470JT
R961,962	247 2004 920	Carbon chip 47 ohm 1/16W	RM73B--470JT
R963	247 2005 903	Carbon chip 100 ohm 1/16W	RM73B--101JT
R965	247 2005 903	Carbon chip 100 ohm 1/16W	RM73B--101JT
R966	247 2004 920	Carbon chip 47 ohm 1/16W	RM73B--470JT
CAPACITORS GROUP			
C101,102	257 0507 976	Ceramic chip 330 pF/50V	CC73CH1H331JT For E2,E1,E1H,E1C,EUT
C113,114	257 0507 976	Ceramic chip 330 pF/50V	CC73CH1H331JT For E2,E1,E1H,E1C,EUT
C125,126	257 0507 976	Ceramic chip 330 pF/50V	CC73CH1H331JT For E2,E1,E1H,E1C,EUT
C137,138	257 0507 976	Ceramic chip 330 pF/50V	CC73CH1H331JT For E2,E1,E1H,E1C,EUT
C149,150	257 0507 976	Ceramic chip 330 pF/50V	CC73CH1H331JT For E2,E1,E1H,E1C,EUT
C161,162	257 0507 976	Ceramic chip 330 pF/50V	CC73CH1H331JT For E2,E1,E1H,E1C,EUT
C167-172	257 0506 951	Ceramic chip 100 pF/50V	CC73CH1H101JT
C173,174	257 0511 904	Ceramic chip 0.01 uF/50V	CK73F1H103ZT
C177	256 1059 954	Metalized 0.47 uF/50V	CF93A1H474JT (JL)
C178	257 0511 904	Ceramic chip 0.01 uF/50V	CK73F1H103ZT
C185,186	254 4524 943	Electrolytic 1 uF/50V	CE04W1H010MT SMG/RE3
C187	257 0507 934	Ceramic chip 220 pF/50V	CC73CH1H221JT
C188	257 0509 929	Ceramic chip 1000 pF/50V	CK73B1H102KT
C189,190	254 4524 985	Electrolytic 10 uF/50V	CE04W1H100MT SMG/RE3
C193,194	254 4524 943	Electrolytic 1 uF/50V	CE04W1H010MT SMG/RE3
C195,196	254 4524 998	Electrolytic 22 uF/50V	CE04W1H220MT SMG/RE3 For EU,982,EC, E1,E1H,E1C,EUT
	254 4538 942	Electrolytic 100 uF/16V	CE04W1C101MT SMG/RE3 For E2
C197,198	254 4538 900	Electrolytic 10 uF/16V	CE04W1C100MT SMG/RE3
C251-254	257 0511 904	Ceramic chip 0.01 uF/50V	CK73F1H103ZT
C255	254 4536 928	Electrolytic 100 uF/10V	CE04W1A101MT SMG/RE3
C257-260	254 4538 939	Electrolytic 47 uF/16V	CE04W1C470MT SMG/RE3
C261,262	257 0511 904	Ceramic chip 0.01 uF/50V	CK73F1H103ZT
C263	254 4536 928	Electrolytic 100 uF/10V	CE04W1A101MT SMG/RE3
C265	254 4538 939	Electrolytic 47 uF/16V	CE04W1C470MT SMG/RE3
C266	254 4536 928	Electrolytic 100 uF/10V	CE04W1A101MT SMG/RE3
C267	254 4538 939	Electrolytic 47 uF/16V	CE04W1C470MT SMG/RE3
C269-272	257 0512 903	Ceramic chip 0.1 uF/25V	CK73F1E104ZT
C273	254 4524 943	Electrolytic 1 uF/50V	CE04W1H010MT SMG/RE3
C277,278	257 0511 904	Ceramic chip 0.01 uF/50V	CK73F1H103ZT
C301,302	257 0511 920	Ceramic chip 0.047 uF/50V	CK73F1H473ZT
C306	257 0512 903	Ceramic chip 0.1 uF/25V	CK73F1E104ZT
C307	254 4524 943	Electrolytic 1 uF/50V	CE04W1H010MT SMG/RE3
C311	257 0511 904	Ceramic chip 0.01 uF/50V	CK73F1H103ZT
C312	257 0512 903	Ceramic chip 0.1 uF/25V	CK73F1E104ZT

Downloaded from www.Manualslib.com manuals search engine

Ref. No.	Part No.	Part Name	Remarks
C313	254 4524 943	Electrolytic 1 uF/50V	CE04W1H010MT SMG/RE3
C451	254 4538 900	Electrolytic 10 uF/16V	CE04W1C100MT SMG/RE3
C452,453	257 0511 920	Ceramic chip 0.047 uF/50V	CK73F1H473ZT
C457	257 0504 940	Ceramic chip 33 pF/50V	CC73CH1H330JT
C458	257 0501 901	Ceramic chip 0.01 uF/50V	CK73B1H103KT (1608)
C459,460	257 0503 925	Ceramic chip 10 pF/50V	CC73CH1H100DT
C461	255 1265 978	Mylar film 0.022 uF/50V	CQ93M1H223JT(B)
C462	254 4524 972	Electrolytic 4.7 uF/50V	CE04W1H4R7MT SMG/RE3
C463	257 0506 951	Ceramic chip 100 pF/50V	CC73CH1H101JT
C464	254 4524 943	Electrolytic 1 uF/50V	CE04W1H010MT SMG/RE3
C465	254 4538 900	Electrolytic 10 uF/16V	CE04W1C100MT SMG/RE3
C466	255 1264 908	Mylar film 1000 pF/50V	CQ93M1H102JT(B)
C467	254 4536 928	Electrolytic 100 uF/10V	CE04W1A101MT SMG/RE3
C468	257 0511 904	Ceramic chip 0.01 uF/50V	CK73F1H103ZT
C469	255 1264 911	Mylar film 1200 pF/50V	CQ93M1H122JT(B)
C470	257 0506 993	Ceramic chip 150 pF/50V	CC73CH1H151JT
C471	254 4524 943	Electrolytic 1 uF/50V	CE04W1H010MT SMG/RE3
C472	256 1058 955	Metalized 0.068 uF/50V	CF93A1H683JT (JL)
C473	257 0508 917	Ceramic chip 470 pF/50V	CC73CH1H471JT
C474	257 0510 918	Ceramic chip 3300 pF/50V	CK73B1H332KT
C478	257 0512 903	Ceramic chip 0.1 uF/25V	CK73F1E104ZT
C479	254 4524 943	Electrolytic 1 uF/50V	CE04W1H010MT SMG/RE3
C480-483	257 0512 903	Ceramic chip 0.1 uF/25V	CK73F1E104ZT
C484	257 0509 929	Ceramic chip 1000 pF/50V	CK73B1H102KT
			For E1,E1H
C486,487	257 0504 940	Ceramic chip 33 pF/50V	CC73CH1H330JT
C488	254 4536 928	Electrolytic 100 uF/10V	CE04W1A101MT SMG/RE3
C489	257 0511 904	Ceramic chip 0.01 uF/50V	CK73F1H103ZT
C490	254 4538 900	Electrolytic 10 uF/16V	CE04W1C100MT SMG/RE3
C501-504	254 4538 939	Electrolytic 47 uF/16V	CE04W1C470MT SMG/RE3
C505-512	257 0511 904	Ceramic chip 0.01 uF/50V	CK73F1H103ZT
C513,514	254 4536 928	Electrolytic 100 uF/10V	CE04W1A101MT SMG/RE3
C517,518	254 4538 939	Electrolytic 47 uF/16V	CE04W1C470MT SMG/RE3
C519-524	257 0511 904	Ceramic chip 0.01 uF/50V	CK73F1H103ZT
C525,526	254 4538 939	Electrolytic 47 uF/16V	CE04W1C470MT SMG/RE3
C529-531	254 4536 928	Electrolytic 100 uF/10V	CE04W1A101MT SMG/RE3
C532,533	256 1058 939	Metalized 0.047 uF/50V	CF93A1H473JT (JL)
C534	254 4524 943	Electrolytic 1 uF/50V	CE04W1H010MT SMG/RE3
C535	256 1058 939	Metalized 0.047 uF/50V	CF93A1H473JT (JL)
C536-539	257 0512 903	Ceramic chip 0.1 uF/25V	CK73F1E104ZT
C540	254 4524 943	Electrolytic 1 uF/50V	CE04W1H010MT SMG/RE3
C541	257 0512 903	Ceramic chip 0.1 uF/25V	CK73F1E104ZT
C588	257 0512 903	Ceramic chip 0.1 uF/25V	CK73F1E104ZT
C601	257 0512 903	Ceramic chip 0.1 uF/25V	CK73F1E104ZT
C602	254 4524 985	Electrolytic 10 uF/50V	CE04W1H100MT SMG/RE3
C604	257 0512 903	Ceramic chip 0.1 uF/25V	CK73F1E104ZT
C605,606	254 4524 985	Electrolytic 10 uF/50V	CE04W1H100MT SMG/RE3
C607	257 0512 903	Ceramic chip 0.1 uF/25V	CK73F1E104ZT
C608	254 4524 985	Electrolytic 10 uF/50V	CE04W1H100MT SMG/RE3

Ref. No.	Part No.	Part Name	Remarks
C622	257 0506 951	Ceramic chip 100 pF/50V	CC73CH1H101JT
C623	257 0512 903	Ceramic chip 0.1 uF/25V	CK73F1E104ZT
C624	254 4536 928	Electrolytic 100 uF/10V	CE04W1A101MT SMG/RE3
C625	254 4524 956	Electrolytic 2.2 uF/50V	CE04W1H2R2MT SMG/RE3
C626	257 0512 903	Ceramic chip 0.1 uF/25V	CK73F1E104ZT
C627	254 4538 900	Electrolytic 10 uF/16V	CE04W1C100MT SMG/RE3
C628	257 0512 903	Ceramic chip 0.1 uF/25V	CK73F1E104ZT
C701-704	257 0508 933	Ceramic chip 560 pF/50V	CC73CH1H561JT
C705,706	257 0506 919	Ceramic chip 68 pF/50V	CC73CH1H680JT
C707,708	257 0507 918	Ceramic chip 180 pF/50V	CC73CH1H181JT
C709,710	255 1264 940	Mylar film 2200 pF/50V	CQ93M1H222JT(B)
C711,712	254 4524 998	Electrolytic 22 uF/50V	CE04W1H220MT SMG/RE3
C721,722	254 4524 985	Electrolytic 10 uF/50V	CE04W1H100MT SMG/RE3
C723-726	257 0508 959	Ceramic chip 680 pF/25V	CC73CH1E681JT
C727,728	254 4524 998	Electrolytic 22 uF/50V	CE04W1H220MT SMG/RE3
C729,730	255 1264 982	Mylar film 4700 pF/50V	CQ93M1H472JT(B)
C741,742	254 4524 985	Electrolytic 10 uF/50V	CE04W1H100MT SMG/RE3
C743-746	257 0508 959	Ceramic chip 680 pF/25V	CC73CH1E681JT
C747,748	254 4524 998	Electrolytic 22 uF/50V	CE04W1H220MT SMG/RE3
C749,750	255 1264 982	Mylar film 4700 pF/50V	CQ93M1H472JT(B)
C761,762	254 4524 985	Electrolytic 10 uF/50V	CE04W1H100MT SMG/RE3
C763-766	257 0508 959	Ceramic chip 680 pF/25V	CC73CH1E681JT
C767,768	254 4524 998	Electrolytic 22 uF/50V	CE04W1H220MT SMG/RE3
C769,770	255 1264 982	Mylar film 4700 pF/50V	CQ93M1H472JT(B)
C781	254 4524 985	Electrolytic 10 uF/50V	CE04W1H100MT SMG/RE3
C782,783	257 0512 903	Ceramic chip 0.1 uF/25V	CK73F1E104ZT
C784	254 4524 985	Electrolytic 10 uF/50V	CE04W1H100MT SMG/RE3
C787	254 4524 901	Electrolytic 0.1 uF/50V	CE04W1H0R1MT SMG/RE3
C789	254 4524 901	Electrolytic 0.1 uF/50V	CE04W1H0R1MT SMG/RE3
C800-803	257 0512 903	Ceramic chip 0.1 uF/25V	CK73F1E104ZT
C804	254 4524 943	Electrolytic 1 uF/50V	CE04W1H010MT SMG/RE3
C805,806	257 0512 903	Ceramic chip 0.1 uF/25V	CK73F1E104ZT
C807	257 0511 904	Ceramic chip 0.01 uF/50V	CK73F1H103ZT
C808	257 0011 996	Ceramic chip 0.1 uF/25V	CK73B1E104KT
C809	257 0512 903	Ceramic chip 0.1 uF/25V	CK73F1E104ZT
C810	257 0501 901	Ceramic chip 0.01 uF/50V	CK73B1H103KT (1608)
C811	254 4524 943	Electrolytic 1 uF/50V	CE04W1H010MT SMG/RE3
C812,813	257 0512 903	Ceramic chip 0.1 uF/25V	CK73F1E104ZT
C814	257 0511 904	Ceramic chip 0.01 uF/50V	CK73F1H103ZT
C815	254 4524 956	Electrolytic 2.2 uF/50V	CE04W1H2R2MT SMG/RE3
C816	257 0508 917	Ceramic chip 470 pF/50V	CC73CH1H471JT
C817	255 1265 936	Mylar film 0.01 uF/50V	CQ93M1H103JT(B)
C818	257 0509 929	Ceramic chip 1000 pF/50V	CK73B1H102KT
C819	257 0511 904	Ceramic chip 0.01 uF/50V	CK73F1H103ZT
C820	257 0512 903	Ceramic chip 0.1 uF/25V	CK73F1E104ZT
C821	257 0507 976	Ceramic chip 330 pF/50V	CC73CH1H331JT
C822,823	257 0504 966	Ceramic chip 39 pF/50V	CC73CH1H390JT
C825	257 0511 904	Ceramic chip 0.01 uF/50V	CK73F1H103ZT
C833	254 4524 943	Electrolytic 1 uF/50V	CE04W1H010MT SMG/RE3
C834,835	254 4538 900	Electrolytic 10 uF/16V	CE04W1C100MT SMG/RE3

Downloaded from www.Manualslib.com manuals search engine

Ref. No.	Part No.	Part Name	Remarks
C838	254 4524 943	Electrolytic 1 uF/50V	CE04W1H010MT SMG/RE3
C850,851	257 0511 904	Ceramic chip 0.01 uF/50V	CK73F1H103ZT
C856-859	257 0511 904	Ceramic chip 0.01 uF/50V	CK73F1H103ZT
C869,870	254 4524 943	Electrolytic 1 uF/50V	CE04W1H010MT SMG/RE3
C871,872	257 0509 929	Ceramic chip 1000 pF/50V	CK73B1H102KT
C873-876	254 4538 900	Electrolytic 10 uF/16V	CE04W1C100MT SMG/RE3
C877,878	257 0506 951	Ceramic chip 100 pF/50V	CC73CH1H101JT
C879,880	254 4538 900	Electrolytic 10 uF/16V	CE04W1C100MT SMG/RE3
C881,882	257 0506 951	Ceramic chip 100 pF/50V	CC73CH1H101JT
C885,886	254 4538 900	Electrolytic 10 uF/16V	CE04W1C100MT SMG/RE3
C887,888	255 1264 908	Mylar film 1000 pF/50V	CQ93M1H102JT(B)
C894,895	257 0511 904	Ceramic chip 0.01 uF/50V	CK73F1H103ZT
C913	257 0511 904	Ceramic chip 0.01 uF/50V	CK73F1H103ZT
C915,916	257 0511 904	Ceramic chip 0.01 uF/50V	CK73F1H103ZT
C917	257 0512 903	Ceramic chip 0.1 uF/25V	CK73F1E104ZT
C919	257 0512 903	Ceramic chip 0.1 uF/25V	CK73F1E104ZT
C922-925	257 0512 903	Ceramic chip 0.1 uF/25V	CK73F1E104ZT
C926	254 4536 928	Electrolytic 100 uF/10V	CE04W1A101MT SMG/RE3
C927	254 4536 928	Electrolytic 100 uF/10V	CE04W1A101MT SMG/RE3
C928,929	254 4536 928	Electrolytic 100 uF/10V	CE04W1A101MT SMG/RE3
C934	257 0511 904	Ceramic chip 0.01 uF/50V	CK73F1H103ZT
C935,936	257 0512 903	Ceramic chip 0.1 uF/25V	CK73F1E104ZT
C937	257 0511 904	Ceramic chip 0.01 uF/50V	CK73F1H103ZT
C938	257 0512 903	Ceramic chip 0.1 uF/25V	CK73F1E104ZT
C939	257 0511 904	Ceramic chip 0.01 uF/50V	CK73F1H103ZT

Ref. No.	Part No.	Part Name	Remarks	Q'ty
OTHER PARTS GROUP				
CW061	205 0942 019	6P connector socket (TUC-P)		1
CW072	205 0942 022	7P connector socket (TUC-P)		1
CW081,082	205 0885 095	8P connector socket (TUC-P)		2
CW086	205 0885 095	8P connector socket (TUC-P)		1
CW093	205 0885 037	9P connector socket (TUC-P)		1
CW111	205 0885 066	11P connector socket (TUC-P)		1
CW121,122	205 0885 079	12P connector socket (TUC-P)		2
CW153	205 0885 040	15P connector socket (TUC-P)		1
CX073	205 0343 074	7P connector base (KR-PH)		1
FB302-309	235 0130 903	Chip emifil (11A121)		8
FB458,459	235 0049 900	Beads inductor		2
FB708,709	235 0049 900	Beads inductor		2
FB803,804	235 0049 900	Beads inductor		2
FB807-813	235 0049 900	Beads inductor		7
FB815	235 0130 903	Chip emifil (11A121)		1
FB816	235 0049 900	Beads inductor		1
FB817	235 0130 903	Chip emifil (11A121)		1
JK106-108	204 8513 010	6P pin jack (S-GND)		3
JK251	204 8516 017	3P pin jack		1
JK252	204 8583 008	2P pin jack (video)		1
JK253	204 8516 017	3P pin jack		1
JK401	204 8415 011	3P S-terminal		1
JK403,404	204 8414 012	2P S-terminal		2
JK407	205 0902 004	1P S-terminal (SW)		1
JK451-453	204 8581 000	3P pin jack (NI-COM.V)		3
L451	235 0060 963	Inductor 15uH		1
L801	235 0130 903	Chip emifil (11A121)		1
L803-807	235 0130 903	Chip emifil (11A121)		5
RL451-454	214 0203 008	Relay (NA12W-K)		4
S451	212 0408 001	Slide switch	For E1,E1H	1
X302	399 0532 902	Ceramic 12.5 MHz	CST12.5MTW-TF01	1
X451	399 0739 006	Crystal 14.32 MHz-RIBER		1
X452	399 0105 009	Ceramic resonator CSB503F2		1
X801	399 0219 021	Crystal 12.288 MHz		1

Downloaded from www.Manualslib.com manuals search engine

EXPLODED VIEW

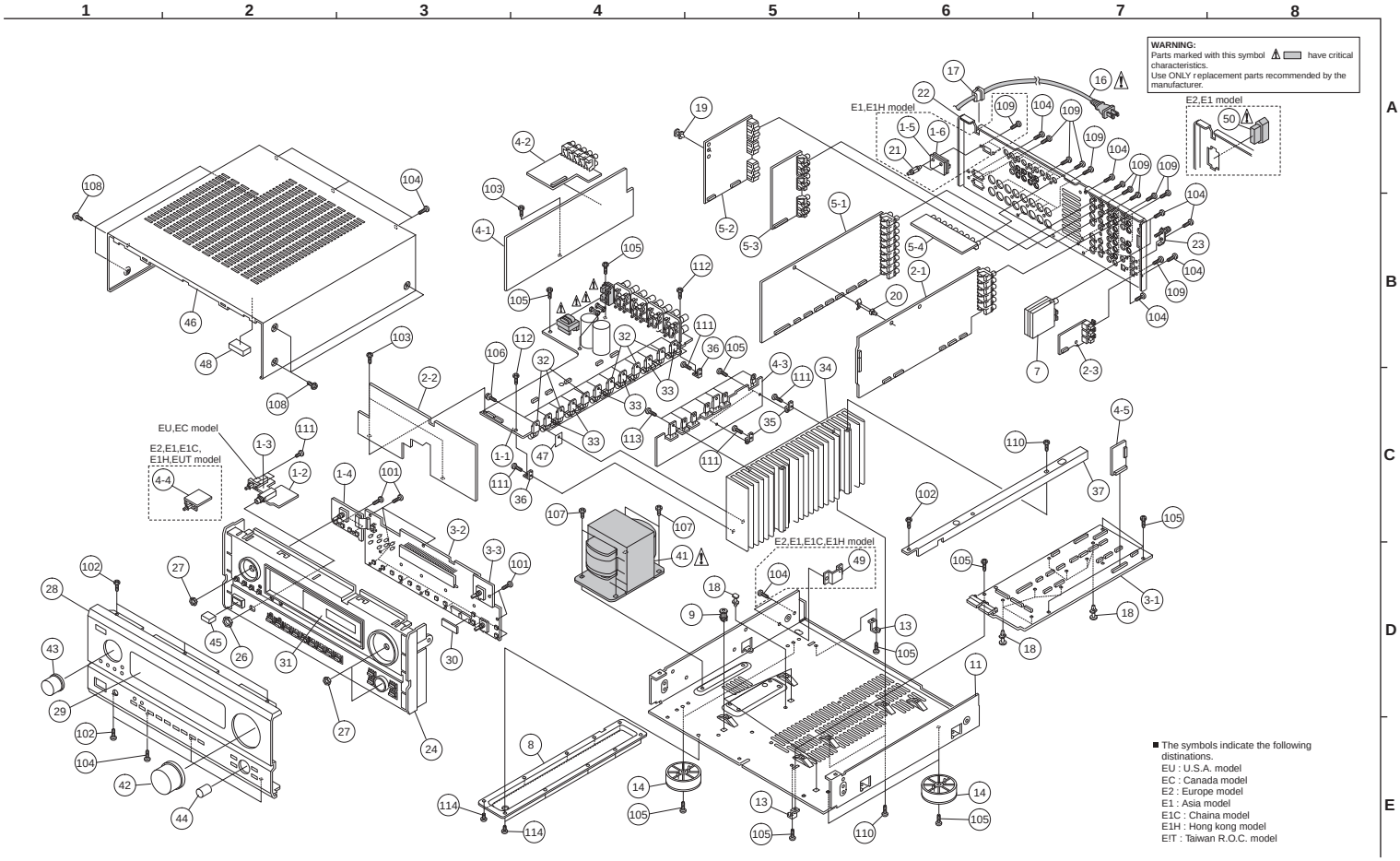

Downloaded from www.Manualslib.com manuals search engine

PARTS LIST OF EXPLODED VIEW

Note : The symbols in the column "Remarks" indicate the following destinations.
EU: U.S.A. model
982: AVR-982 (U.S.A.) model
EC: Canada model
E2: Europe model
E1: Asia model
E1H: Hong Kong model
E1C: China model
EUT: Taiwan R.O.C. model

Ref. No.	Part No.	Part Name	Remarks	Q'ty
1	1U- 3368	Power unit ass'y	For EU,982,EC	1
	1U- 3368 B		For E2	1
	1U- 3368 A		For E1,E1H	1
	1U- 3368 F		For E1C	1
	1U- 3368 E		For EUT	1
1-1		Power unit		
1-2		H/P unit		
1-3		P.SW-1 unit	For EU,982,EC	
1-4		Front unit		
1-5		Voltage sel-1 unit	For E1,E1H	
1-6		Voltage sel-2 unit	For E1,E1H	
2	1U- 3369	EXT.IN unit ass'y	For EU,982,EC	1
	1U- 3369 B		For E2	1
	1U- 3369 A		For E1,E1H,E1C	1
	1U- 3369 E		For EUT	1
2-1		EXT.IN VR unit		
2-2		Connect unit		
2-3		Digital in unit		
3	1U- 3370	Control unit ass'y	For EU,982,EC	1
	1U- 3370 B		For E2	1
	1U- 3370 A		For E1,E1H	1
	1U- 3370 E		For E1C,EUT	1
3-1		Control unit		
3-2		Display unit		
3-3		VOL unit		
4	1U- 3371	Regulator unit ass'y	For EU,982,EC	1
	1U- 3371 A		For E2,E1,E1H,E1C	1
	1U- 3371 E		For EUT	1
4-1		AMP connect unit		
4-2		Pre out unit		
4-3		Regulator unit		
4-4		P.SW-2 unit	For E2,E1,E1H,E1C,EUT	
4-5		Tuner connect unit		
5	1U- 3373	DSP/Video unit ass'y	For EU,982,EC	1
	1U- 3373 B		For E2	1
	1U- 3373 A		For E1,E1H	1
	1U- 3373 E		For E1C,EUT	1
5-1		Audio/DSP unit		
5-2		S-Video unit		
5-3		C-Video unit		
5-4		Component video unit		
7	216 0113 000	AM FM tuner(E3)	For EU,982,EC,	
			E1,E1H,E1C,EUT	1
	216 0114 009	AM FM tuner(E2)	For E2	1
8	412 4716 001	Support bracket		1
9	412 3548 005	P.W.B. catcher		3
11	411 1372 827	Main chassis		1
13	412 4210 002	Bracket		2
14	104 0194 289	Foot ass'y		4
⚠ 16	206 2160 009	AC cord VH N/I E3	For EU,982,EC,EUT	1
⚠	206 2089 106	AC cord W/Con.E2	For E2	1
⚠	206 2175 007	AC cord(E1/VH)	For E1	1
⚠	206 2177 005	AC cord(EK/VH)	For E1H	1

Ref. No.	Part No.	Part Name	Remarks	Q'ty
⚠	206 2174 008	AC cord(E1C/VH)	For E1C	1
17	445 0056 008	Cord bush		1
18	412 2814 028	Card spacer(L=10)	For EU,982,EC,EUT	11
			For E2,E1C	12
			For E1,E1H	13
19	412 2814 031	Card spacer (L=4)		1
20	409 0052 019	Holder (A)		1
21	449 0133 017	PWB holder	For E1,E1H	2
22	105 1384 075	Back panel	For EU,EC	
			(Material:V2)	1
	105 1384 088	Back panel	For 982	
			(Material:V2)	1
	105 1384 020	Back panel	For E2	1
	105 1384 033	Back panel	For E1,E1H	1
	105 1384 046	Back panel	For E1C	1
	105 1384 091	Back panel	For EUT	1
23	205 1116 006	Terminal ass'y		1
24	146 2214 158	Inner panel	For EU,982,EC	
			(Material:V2)	1
	146 2214 132	Inner panel	For Gold model	1
	146 2214 129	Inner panel	For E2(Black model)	1
26	475 6124 003	12 nut		1
27	—	9 nut		3
28	144 2776 001	Front panel	For EU,EC	1
	144 2776 014		For 982	1
	144 2776 030		For E2(Gold model)	1
	144 2776 027		For E2(Black model)	1
	144 2776 043		For E1,E1H,E1C,EUT	1
29	143 1127 001	Window		1
30	441 0949 090	Spacer		1
31	146 2270 008	Blind sheet	For Gold model	1
32	272 0157 011	MP15P LF551	TR115,116,215,	
			216,315,415	6
33	274 0196 010	MN15N LF551	TR113,114,213,	
			214,313,413	6
34	417 0619 000	Radiator		1
35	412 4127 001	PWB bracket (B)		2
36	412 4825 002	Radiator bracket (L)		2
37	412 4296 107	Radiator bracket		1
⚠ 41	233 6392 008	Power trans(Main/E3)	For EU,982,EC,EUT	1
⚠	233 6398 002	Power trans(Main/E2)	For E2	1
⚠	233 6399 001	Power trans(Main/E1)	For E1,E1H	1
⚠	233 6400 000	Power trans-Main-220V	For E1C	1
42	112 0844 006	Knob (M) ass'y	For Black model	1
	112 0844 019		For Gold model	1
43	112 0846 004	Knob (F) ass'y	For Black model	1
	112 0846 017		For Gold model	1
44	112 0848 002	Knob (S) ass'y	For Black model	1
	112 0848 015		For Gold model	1
45	113 1873 105	Push knob	For Black model	1
	113 1873 118		For Gold model	1
46	102 0638 008	Top cover	For Black model	1
	102 0638 011		For Gold model	1
47	—	Mica sheet		12

Ref. No.	Part No.	Part Name	Remarks	Q'ty
48	461 0976 025	Rubber sheet		1
49	412 2955 107	Side bracket	For E2,E1,E1H,E1C	1
⚠ 50	203 3981 000	AC outlet (E2)	For E2,E1,E1H	1
★	203 5177 029	3P VH con.cord	For E2,E1,E1H (Out let)	1
★	203 2374 029	2P VA-VA cord	For E2,E1,E1H,E1C,EUT	1
★	131 9004 013	DENON mark	For Black model	1
★	131 9004 068	DENON mark	For Gold model	1
★	445 8004 007	Wire clamper	For EU,982,EC,E2,EUT	3
			For E1,E1H	4
			For E1C	2
★	513 3656 009	Fuse caution label	For EU,982,EC	1
★	477 0096 007	Push rivet	For E2,E1,E1H,E1C	
			(SP Terminal)	16
★	GEN 4990 -9	Rating sub ass'y	For E1,E1H	1
★	513 3548 036	Rating label(T)	For EUT	
★	515 8030 066	Preset label	For E1,E1H (AC cord)	1
SCREWS				
101	473 7500 015	3X8 CBTS (P)-Z		13
102	473 7501 001	3X10 CBTS (P)-Z		7
103	473 7501 030	3X20 CBTS (P)-Z		3
104	473 7015 018	3X8 CBTS (S)-B	For EU,982,EC,EUT	13
			For E2,E1,E1H,E1C	15
105	473 7005 002	3X10 CBTS (S)-Z		18
106	477 0153 018	3X16 CPTS(B) SW W		12
107	473 7004 016	4X6 CBTS (S)-Z		4
108	473 8064 000	4X8 CBTS(B)-B-3P	For Black model	6
	473 8064 013	4X8 CBTS(B)-N-3P	For Gold model	6
109	477 0064 107	Fixing screw	For EU,982,EC,	
			EUT,E1,E1H	36
			For E2,E1C	34
110	473 8034 098	3X10 CBTS(B)-B		4
111	473 7500 028	3X8 CFTS (P)-Z		6
112	473 7002 034	3X6 CBTS (S)-B		2
113	473 8034 056	3X14 CBTS(B)Z		7
114	473 7002 005	3X6 CBTS(S)-Z		6

Downloaded from www.Manualslib.com manuals search engine

PACKING VIEW

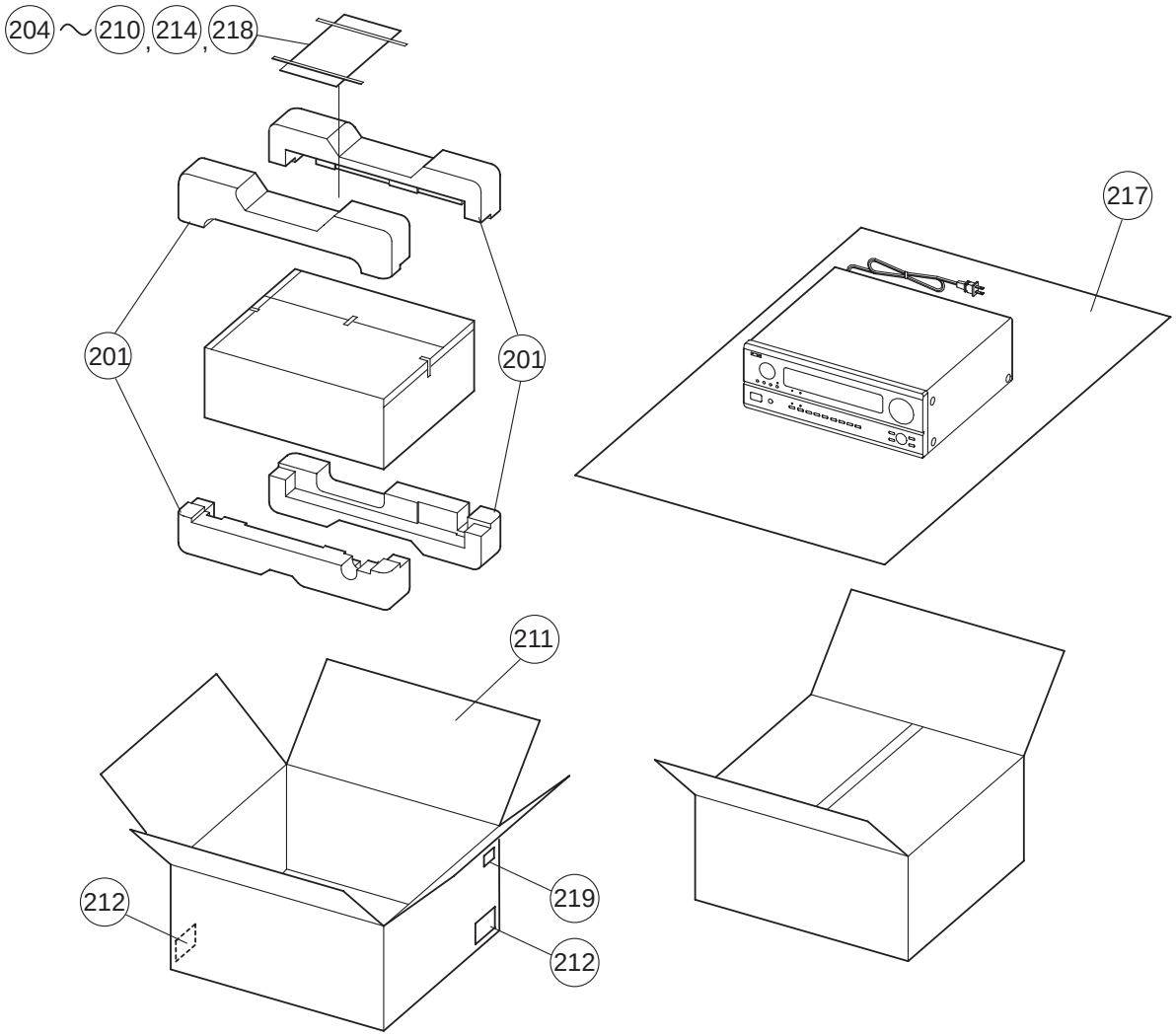

Note: The symbols in the column "Remarks" indicate the following destinations.
EU: U.S.A. model
EC: Canada model
E2: Europe model
E1: Asia model
E1C: China model
E1H: Hong Kong model
EUT: Taiwan R.O.C. model

PARTS LIST OF PACKING & ACCESSORIES

Ref. No.	Part No.	Part Name	Remarks	Q'ty
201	503 1330 003	Cushion ass'y		1
★ 202	502 0933 000	Pad	for E1H	2
204	505 8006 019	Envelope		1
205	511 3799 009	Inst. Manual (EU)	for EU,EC	1
205	511 3831 006	Inst. Manual (E2)	for E2	1
205	511 3832 005	Inst. Manual (E1)	for E1,E1H,EUT	1
205	511 3833 004	Inst. Manual (E1C)	for E1C	1
206	231 0922 009	Loop antenna		1
207	395 0027 004	FM antenna ass'y	for EU,EC,E1,E1C,E1H,EUT	1
207	395 0023 008	FM ANT ass'y	for E2	1
208	529 0079 008	FM ANT adapter	for E1,E1C,E1H,EUT	1
209	399 0757 004	Remote controller RC-903	for EU,EC,E1,E1C,E1H,EUT	1
209	399 0757 017	Remote controller RC-904	for E2	1
210	515 0867 101	S.S.list (EX)		1

Ref. No.	Part No.	Part Name	Remarks	Q'ty
211	501 2100 087	Carton case	for EU,EC,E2,E1,E1C,EUT	1
211	501 2100 090	Carton case	for EU(AVR-982)	1
211	501 2099 033	Carton case	for E1H	1
212	—	Control card		1
214	515 0817 009	DEL warranty form	for EU	1
★ 215	513 9111 001	Color label (gold)	for Gold model	2
217	504 0192 106	Cabinet sheet		1
218	—	Battery (R6P/AA)×2		1
219	—	Bar code label	for EU,EC,E2	1
★ 220	513 3322 003	Label (RDS)	for E2	2
★ 221	513 3548 036	Carton label (T)	for EUT	1
★	515 0627 105	DCI warranty form	for EC	1
★	513 3548 036	Carton label (C)	for EC	1

Downloaded from www.Manualslib.com manuals search engine

WIRING DIAGRAM

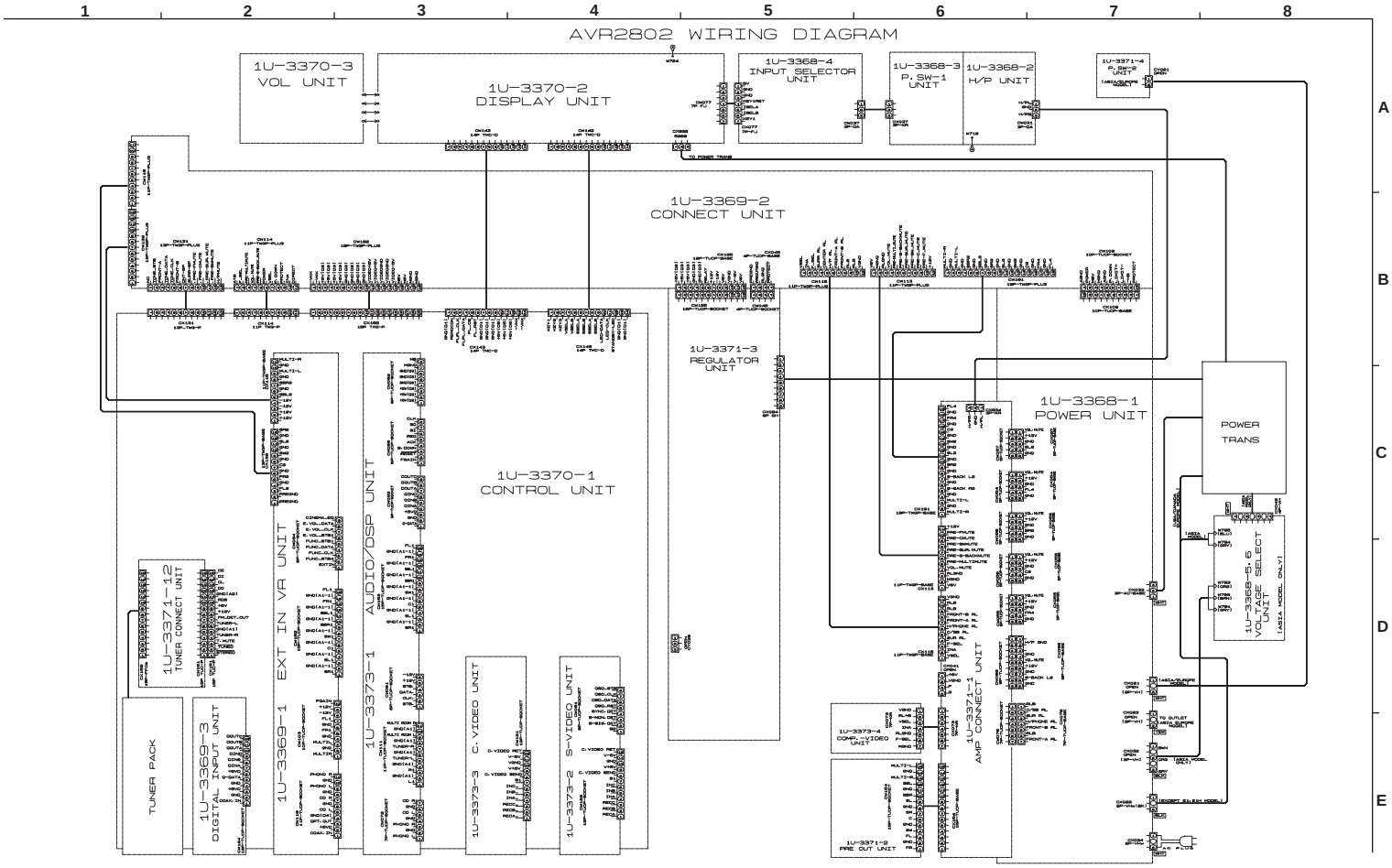

Downloaded from www.Manualslib.com manuals search engine

SCHEMATIC DIAGRAMS (1/12)

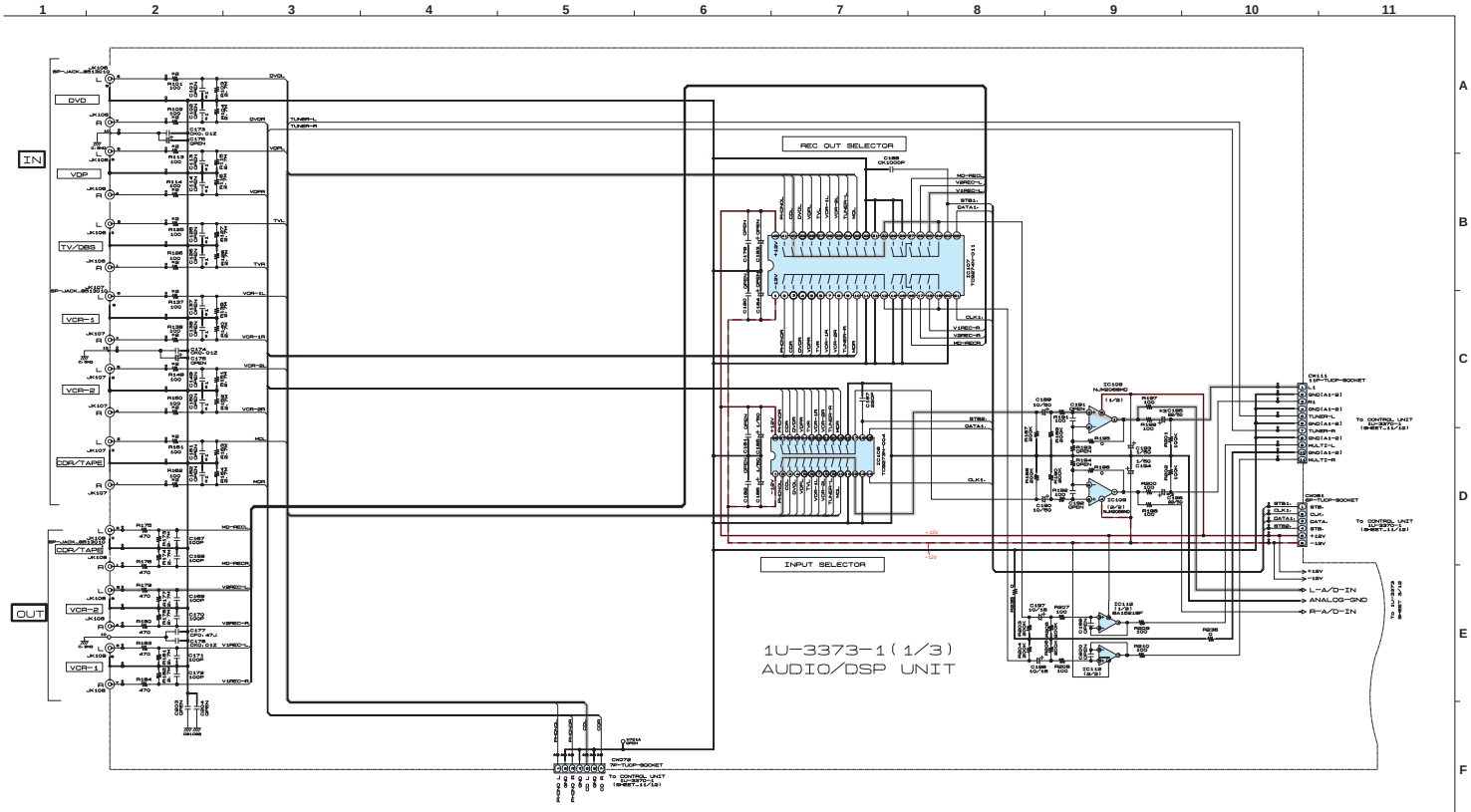

	#1	#2	#3
	C151: 680P, 1kV; C152: 680P, 1kV; C153: 680P, 1kV; C154: 680P, 1kV; C155: 680P, 1kV; C156: 680P, 1kV; C157: 680P, 1kV; C158: 680P, 1kV	C159: 680P, 1kV; C160: 680P, 1kV; C161: 680P, 1kV; C162: 680P, 1kV; C163: 680P, 1kV; C164: 680P, 1kV; C165: 680P, 1kV; C166: 680P, 1kV	C169: 100
AUSTRALIA CANADA	OPEN	OPEN	50/50
EUROPE	330P	470	100/16
ASIA HONG KONG CHINA TAIWAN R.O.C	330P	470	50/50

1U-3373-1(1/3)
AUDIO/DSP UNIT

+B LINE
–B LINE
SIGNAL LINE

NOTICE
ALL RESISTANCE VALUES IN OHM. k=1,000 OHM M=1,000,000 OHM
ALL CAPACITANCE VALUES IN MICRO FARAD. P=MICRO-MICRO FARAD
EACH VOLTAGE AND CURRENT ARE MEASUERD AT NO SIGNAL INPUT CONDITION.
CIRCUIT AND PARTS ARE SUBJECT TO CHANGE WITHOUT PRIOR NOTICE.
NOTICE.

WARNING:
Parts marked with this symbol ⚠ have critical characteristics.
Use ONLY replacement parts recommended by the manufacture.

CAUTION:
Before returning the unit to the customer, make sure you make either (1) a leakage current check or (2) a line to chassis resistance check. If the leakage current exceeds 0.5 milliamps, or if the resistance from chassis to either side of the power cord is less than 460kohms, the unit is defective.

WARNING:
DO NOT return the unit to the customer until the problem is located and corrected.

SCHEMATIC DIAGRAMS (1/12)
1U-3373-1(1/3) AUDIO / DSP UNIT

Downloaded from www.Manualslib.com manuals search engine

SCHEMATIC DIAGRAMS (1/12)

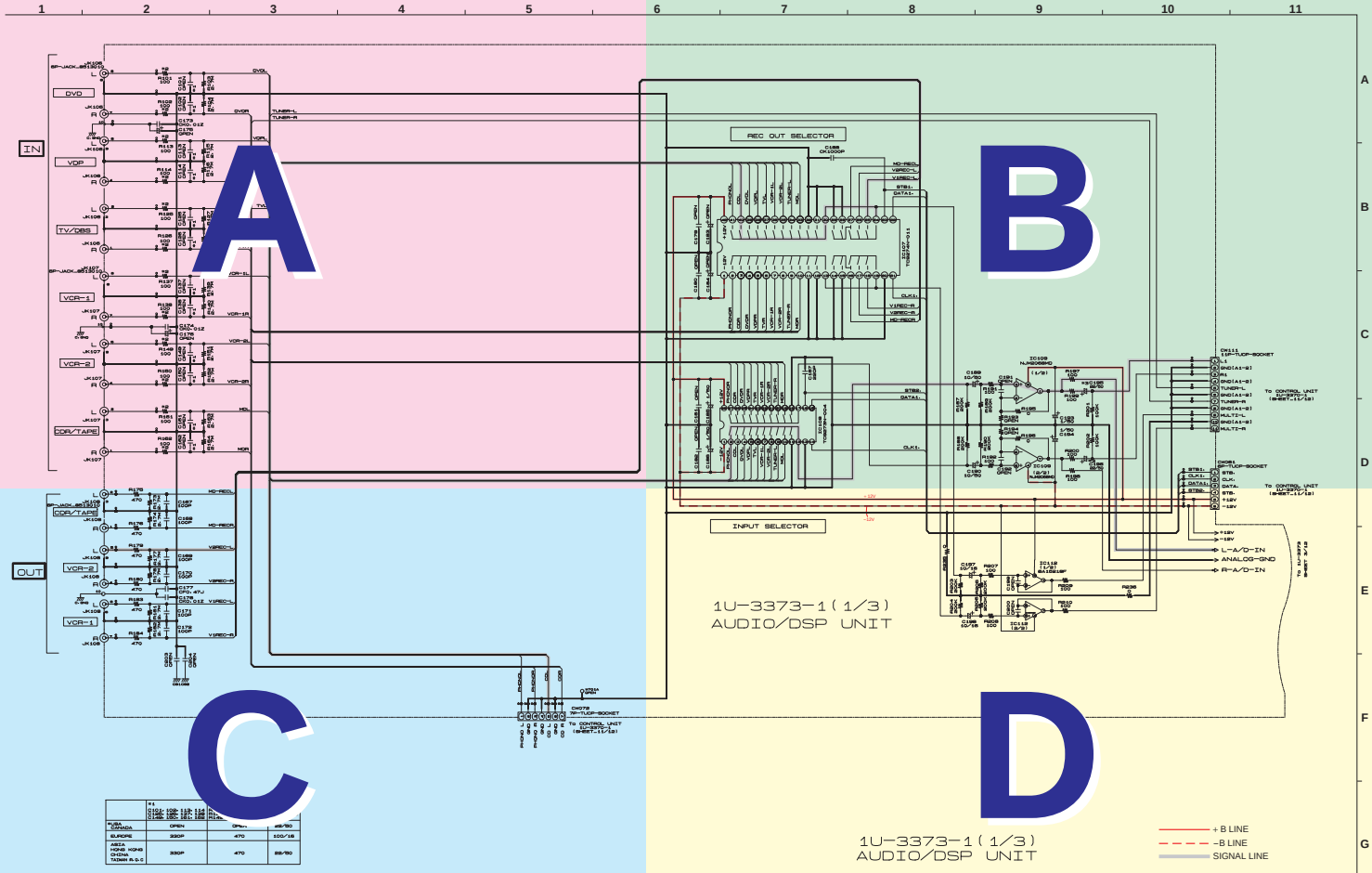

	#1 C152, C153, C154, C155, C156, C157, C158, C159, C160, C161, C162, C163		
KUSA CANADA	OPEN	OPEN	25/50
EUROPE	330P	470	100/16
AREA HONG KONG CHINA TAIWAN R.O.C	330P	470	25/50

NOTICE
ALL RESISTANCE VALUES IN OHM. k=1,000 OHM M=1,000,000 OHM
ALL CAPACITANCE VALUES IN MICRO FARAD. P=MICRO-MICRO FARAD
EACH VOLTAGE AND CURRENT ARE MEASUERD AT NO SIGNAL INPUT CONDITION.
CIRCUIT AND PARTS ARE SUBJECT TO CHANGE WITHOUT PRIOR NOTICE.
NOTICE.

WARNING:
Parts marked with this symbol ⚠ have critical characteristics.
Use ONLY replacement parts recommended by the manufacture.

CAUTION:
Before returning the unit to the customer, make sure you make either (1) a leakage current check or (2) a line to chassis resistance check. If the leakage current exceeds 0.5 milliamps, or if the resistance from chassis to either side of the power card is less than 460kohms, the unit is defective.

WARNING:
DO NOT return the unit to the customer until the problem is located and corrected.

SCHEMATIC DIAGRAMS (1/12)
1U-3373-1(1/3) AUDIO / DSP UNIT

Downloaded from www.Manualslib.com manuals search engine

SCHEMATIC DIAGRAMS (1/12)

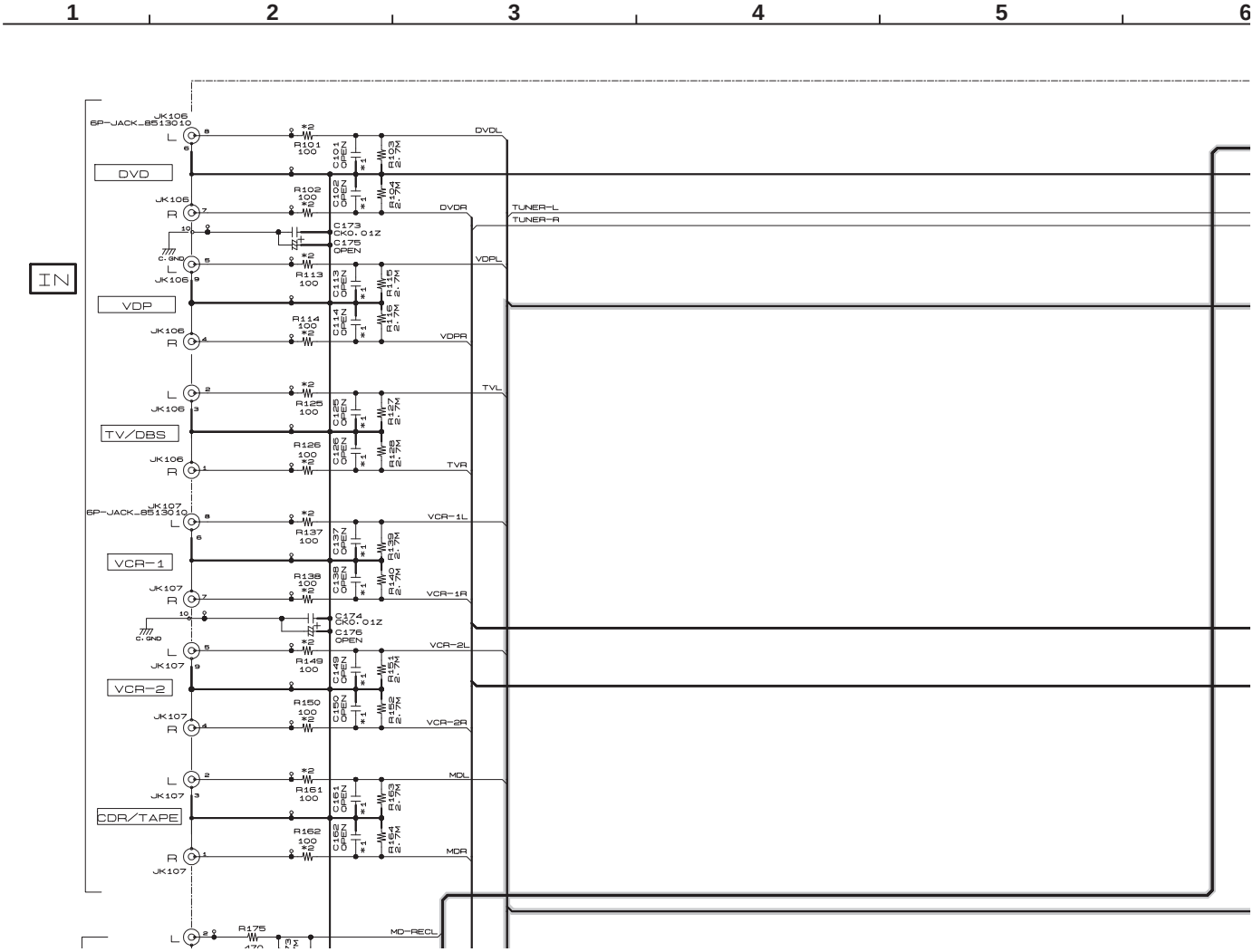

Downloaded from www.Manualslib.com manuals search engine

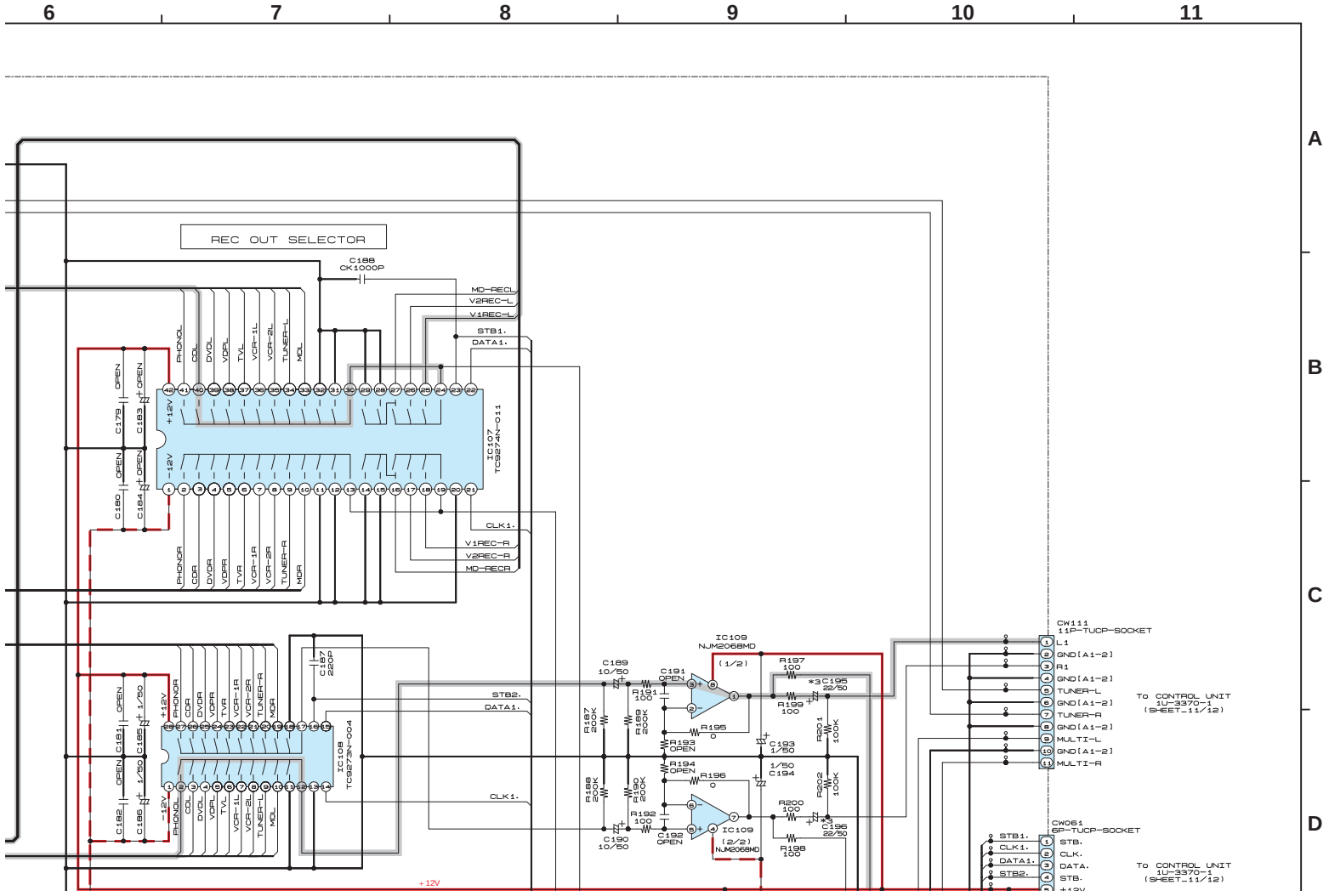

Downloaded from www.Manualslib.com manuals search engine

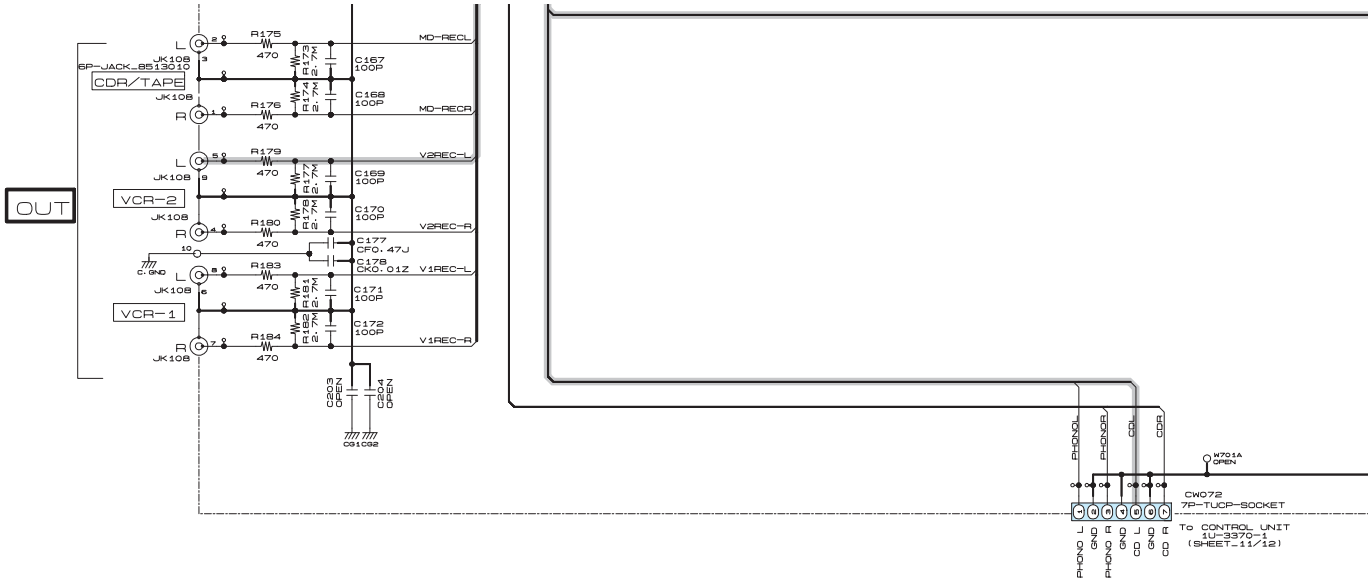

	*1 C101. 102. 113. 114 C125. 126. 137. 138 C149. 150. 161. 162	*2 R101. 102. 113. 114 R125. 126. 137. 138 R149. 150. 161. 162	*3 C195. 196
*USA CANADA	OPEN	OPEN	22/50
EUROPE	330P	470	100/16
ASIA HONG KONG CHINA TAIWAN R.O.C	330P	470	22/50

NOTICE
ALL RESISTANCE VAL
ALL CAPACITANCE VA
EACH VOLTAGE AND
CONDITION.
CIRCUIT AND PARTS
NOTICE.
NOTICE.

Downloaded from www.Manualslib.com manuals search engine

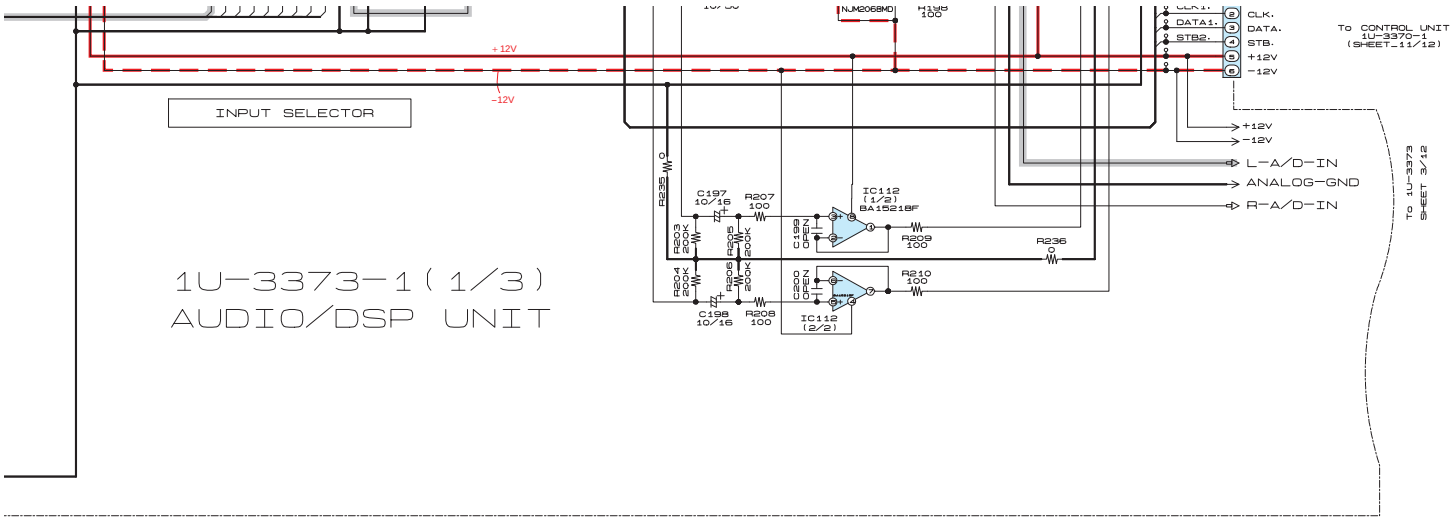

1U-3373-1(1/3)
AUDIO/DSP UNIT

+B LINE
-B LINE
SIGNAL LINE

ICE VALUES IN OHM. k=1,000 OHM M=1,000,000 OHM
NCE VALUES IN MICRO FARAD. P=MICRO-MICRO FARAD
E AND CURRENT ARE MEASUERD AT MO SIGNAL INPUT

PARTS ARE SUBJECT TO CHANGE WITHOUT PRIOR

WARNING:
Parts marked with this symbol ⚠ ▭ have critical characteristics.
Use ONLY replacement parts recommended by the manufacture.

CAUTION:
Before returning the unit to the customer, make sure you make either (1) a leakage current check or (2) a line to chassis resistance check. If the leakage current exceeds 0.5 milliamps, or if the resistance from chassis to either side of the power card is less than 460kohms, the unit is defective.

WARNING:
DO NOT return the unit to the customer until the problem is located and corrected.

SCHEMATIC DIAGRAMS (1/12)
1U-3373-1(1/3) AUDIO / DSP UNIT

Downloaded from www.Manualslib.com manuals search engine

SCHEMATIC DIAGRAMS (2/12)

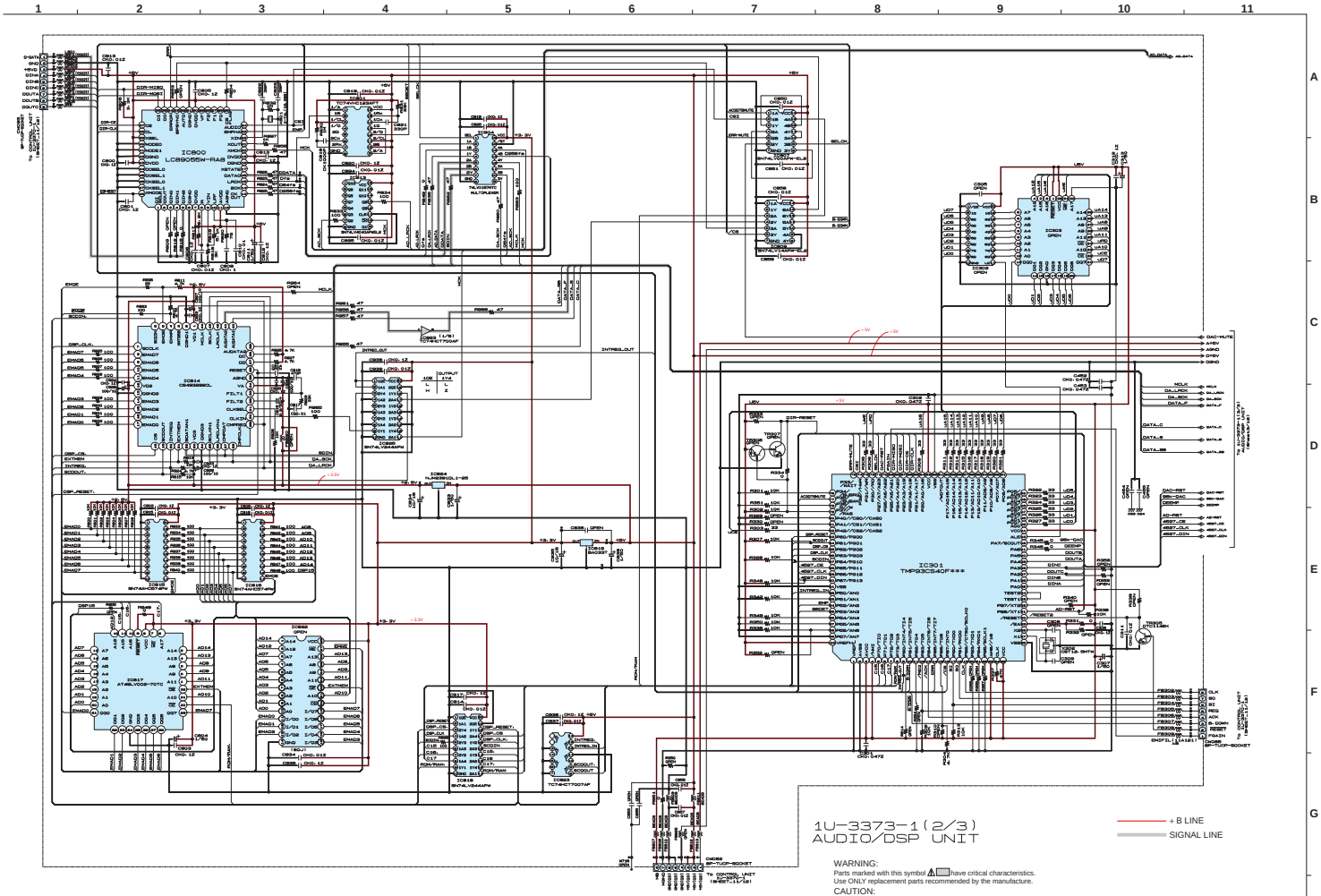

NOTICE
ALL RESISTANCE VALUES IN OHM. k=1,000 OHM M=1,000,000 OHM
ALL CAPACITANCE VALUES IN MICRO FARAD. P=MICRO-MICRO FARAD
EACH VOLTAGE AND CURRENT ARE MEASUERD AT NO SIGNAL INPUT CONDITION.
CIRCUIT AND PARTS ARE SUBJECT TO CHANGE WITHOUT PRIOR NOTICE.

WARNING:
Parts marked with this symbol ⚠ have critical characteristics.
Use ONLY replacement parts recommended by the manufacture.

CAUTION:
Before returning the unit to the customer, make sure you make either (1) a leakage current check or (2) a line to chassis resistance check. If the leakage current exceeds 0.5 milliamps, or if the resistance from chassis to either side of the power card is less than 460kohms, the unit is defective.

WARNING:
DO NOT return the unit to the customer until the problem is located and corrected.

SCHEMATIC DIAGRAMS (2/12)
1U-3373-1(2/3) AUDIO / DSP UNIT

Downloaded from www.Manualslib.com manuals search engine

SCHEMATIC DIAGRAMS (2/12)

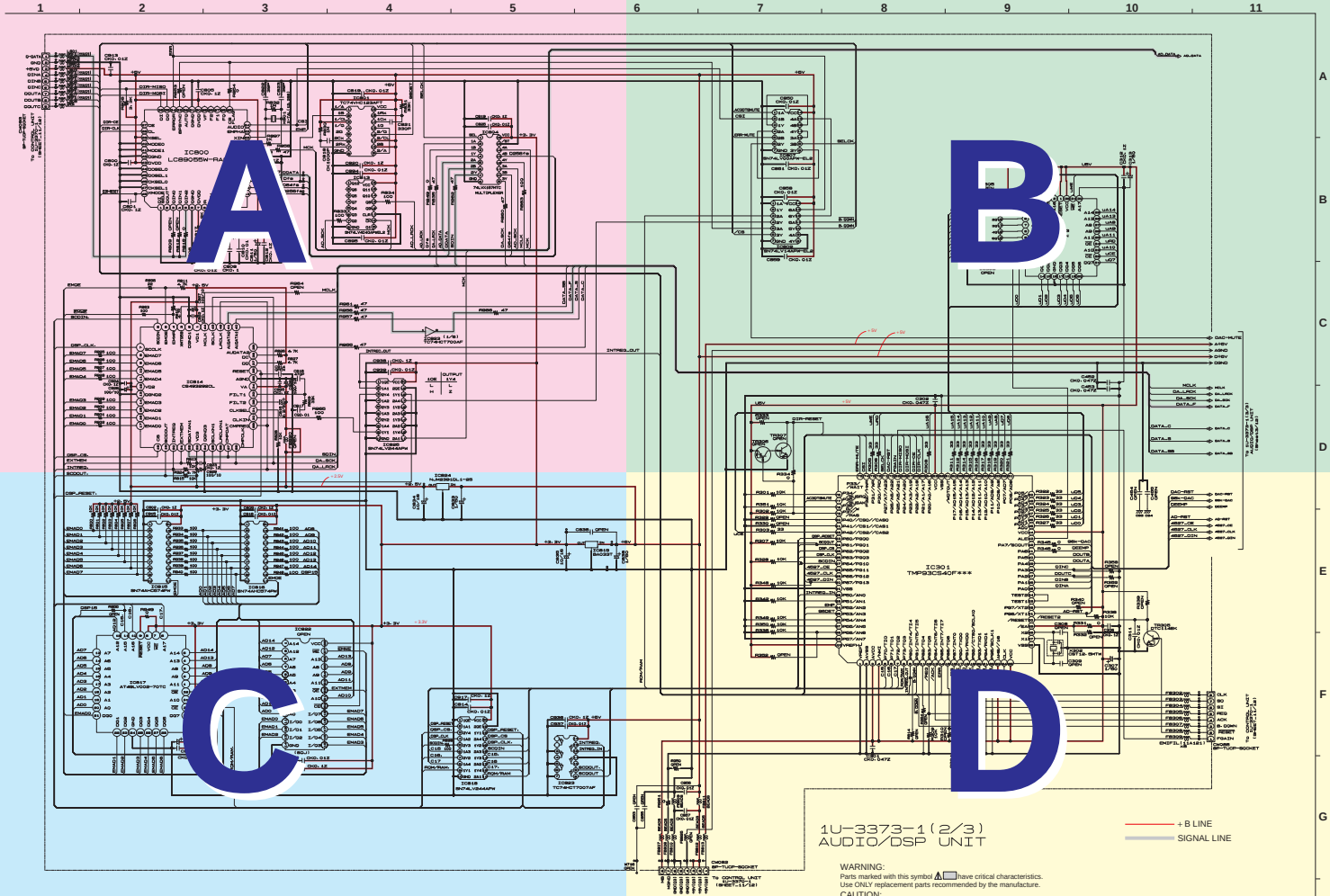

WARNING:
Parts marked with this symbol ⚠ have critical characteristics.
Use ONLY replacement parts recommended by the manufacture.

CAUTION:
Before returning the unit to the customer, make sure you make either (1) a leakage current check or (2) a line to chassis resistance check. If the leakage current exceeds 0.5 milliamps, or if the resistance from chassis to either side of the power card is less than 460kohms, the unit is defective.

WARNING:
DO NOT return the unit to the customer until the problem is located and corrected.

NOTICE
ALL RESISTANCE VALUES IN OHM. k=1,000 OHM M=1,000,000 OHM
ALL CAPACITANCE VALUES IN MICRO FARAD. P=MICRO-MICRO FARAD
EACH VOLTAGE AND CURRENT ARE MEASUERD AT NO SIGNAL INPUT CONDITION.
CIRCUIT AND PARTS ARE SUBJECT TO CHANGE WITHOUT PRIOR NOTICE.

SCHEMATIC DIAGRAMS (2/12)
1U-3373-1(2/3) AUDIO / DSP UNIT

Downloaded from www.Manualslib.com manuals search engine

SCHEMATIC DIAGRAMS (2/12)

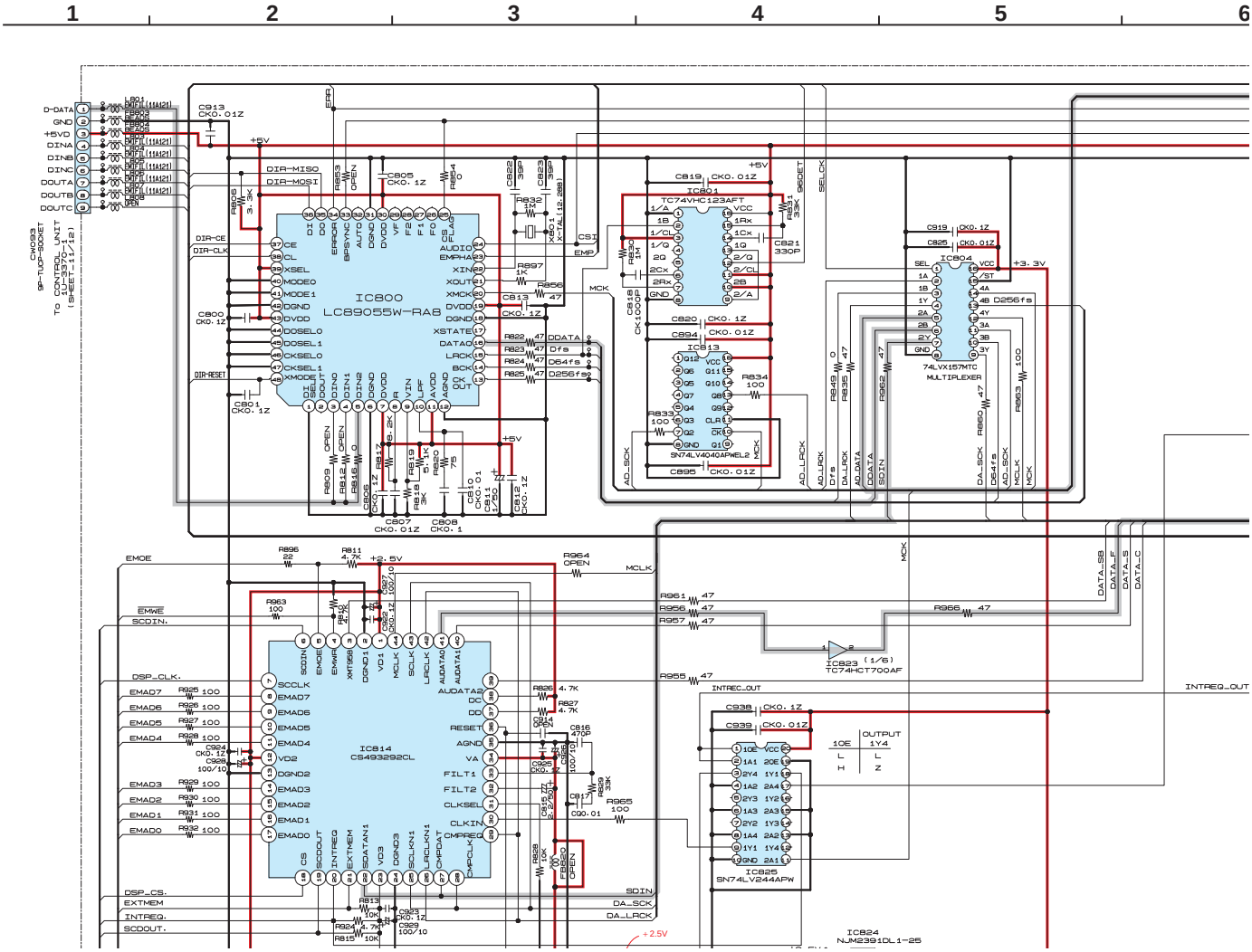

Downloaded from www.Manualslib.com manuals search engine

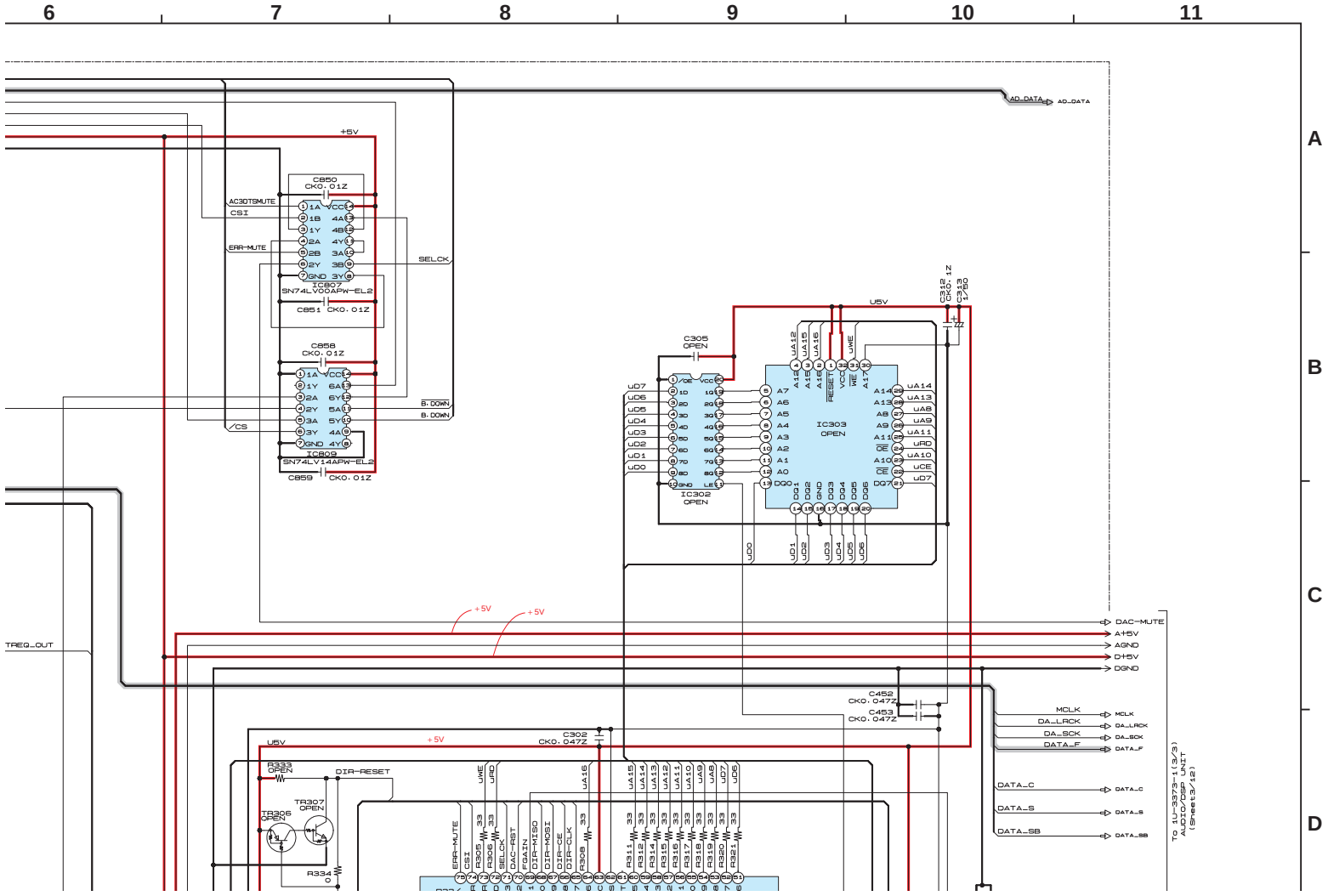

Downloaded from www.Manualslib.com manuals search engine

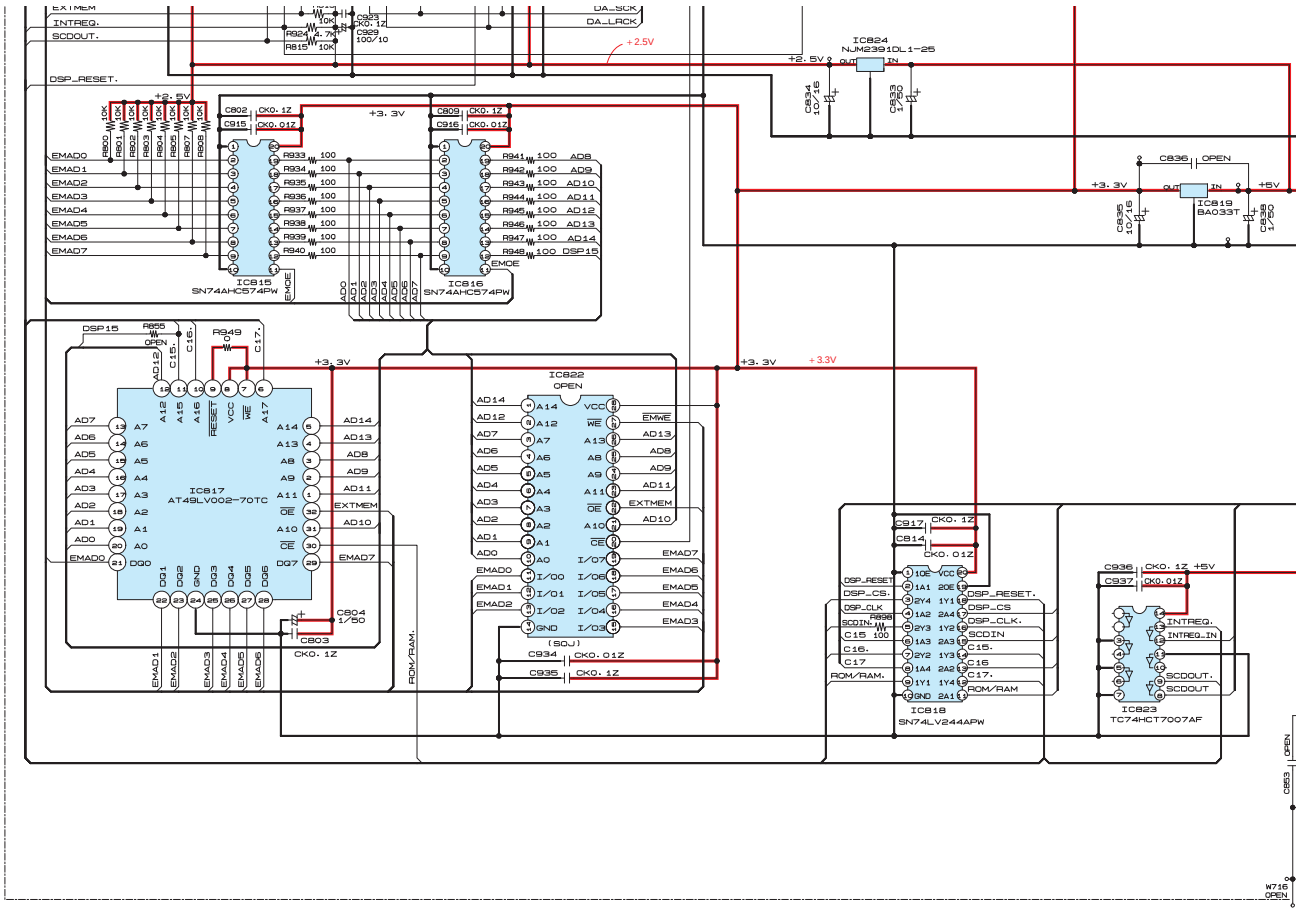

NOTICE

ALL RESISTANCE VAL
ALL CAPACITANCE VA
EACH VOLTAGE AND
CONDITION.
CIRCUIT AND PARTS
NOTICE.

Downloaded from www.Manualslib.com manuals search engine

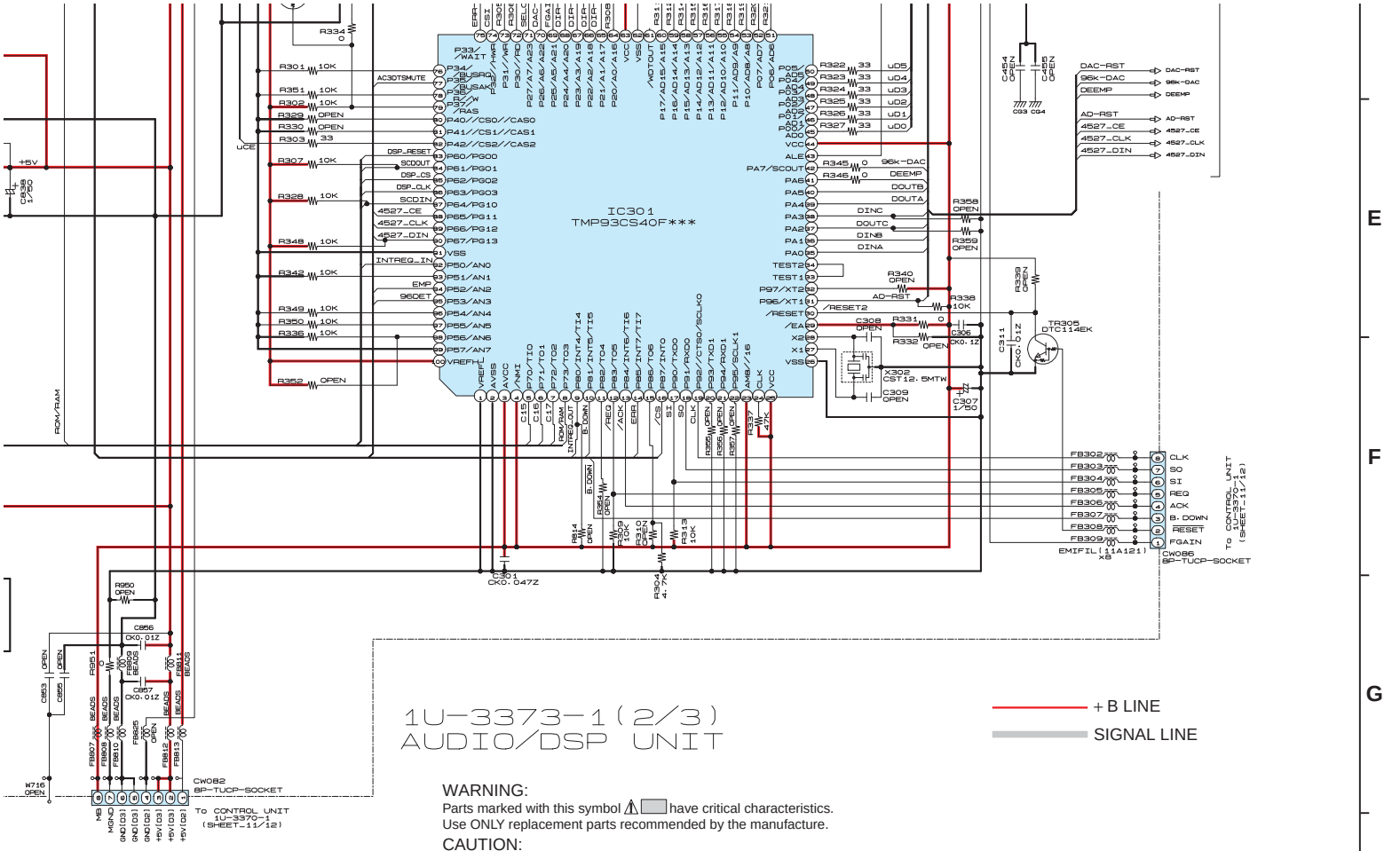

1U-3373-1(2/3) AUDIO/DSP UNIT

+B LINE

SIGNAL LINE

NCE VALUES IN OHM. k=1,000 OHM M=1,000,000 OHM
ANCE VALUES IN MICRO FARAD. P=MICRO-MICRO FARAD
GE AND CURRENT ARE MEASUERD AT MO SIGNAL INPUT

PARTS ARE SUBJECT TO CHANGE WITHOUT PRIOR

WARNING:
Parts marked with this symbol ⚠ ▭ have critical characteristics.
Use ONLY replacement parts recommended by the manufacture.

CAUTION:
Before returning the unit to the customer, make sure you make either (1) a leakage current check or (2) a line to chassis resistance check. If the leakage current exceeds 0.5 milliamps, or if the resistance from chassis to either side of the power card is less than 460kohms, the unit is defective.

WARNING:
DO NOT return the unit to the customer until the problem is located and corrected.

SCHEMATIC DIAGRAMS (2/12)
1U-3373-1(2/3) AUDIO / DSP UNIT

Downloaded from www.Manualslib.com manuals search engine

SCHEMATIC DIAGRAMS (3/12)

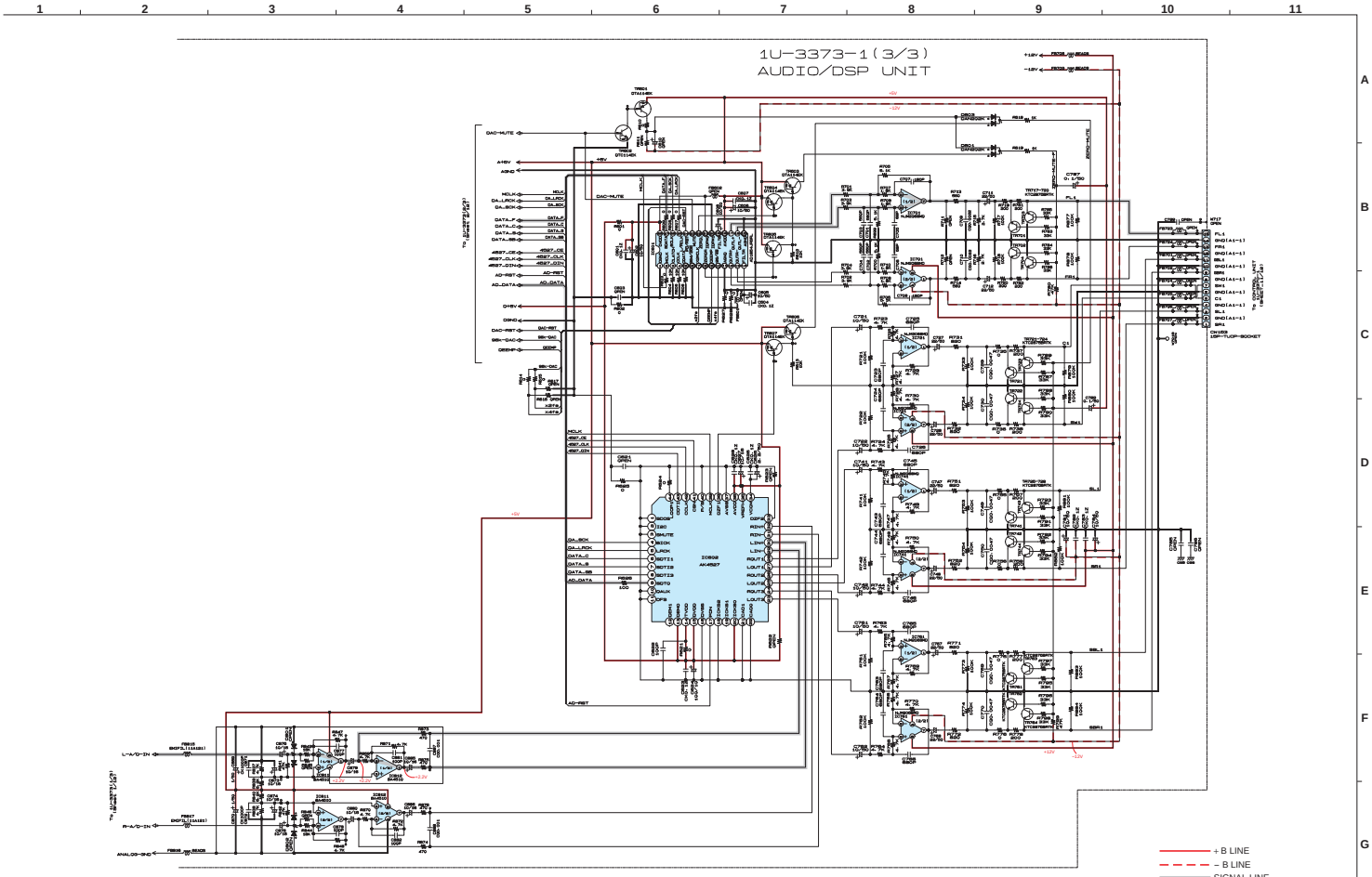

1U-3373-1(3/3)
AUDIO/DSP UNIT

NOTICE
ALL RESISTANCE VALUES IN OHM. k=1,000 OHM M=1,000,000 OHM
ALL CAPACITANCE VALUES IN MICRO FARAD. P=MICRO-MICRO FARAD
EACH VOLTAGE AND CURRENT ARE MEASUERD AT MO SIGNAL INPUT CONDITION.
CIRCUIT AND PARTS ARE SUBJECT TO CHANGE WITHOUT PRIOR NOTICE.

WARNING:
Parts marked with this symbol ⚠ have critical characteristics.
Use ONLY replacement parts recommended by the manufacture.

CAUTION:
Before returning the unit to the customer, make sure you make either (1) a leakage current check or (2) a line to chassis resistance check. If the leakage current exceeds 0.5 milliamps, or if the resistance from chassis to either side of the power cord is less than 460kohms, the unit is defective.

WARNING:
DO NOT return the unit to the customer until the problem is located and corrected.

SCHEMATIC DIAGRAMS (3/12)
1U-3373-1(3/3) AUDIO / DSP UNIT

Downloaded from www.Manualslib.com manuals search engine

SCHEMATIC DIAGRAMS (3/12)

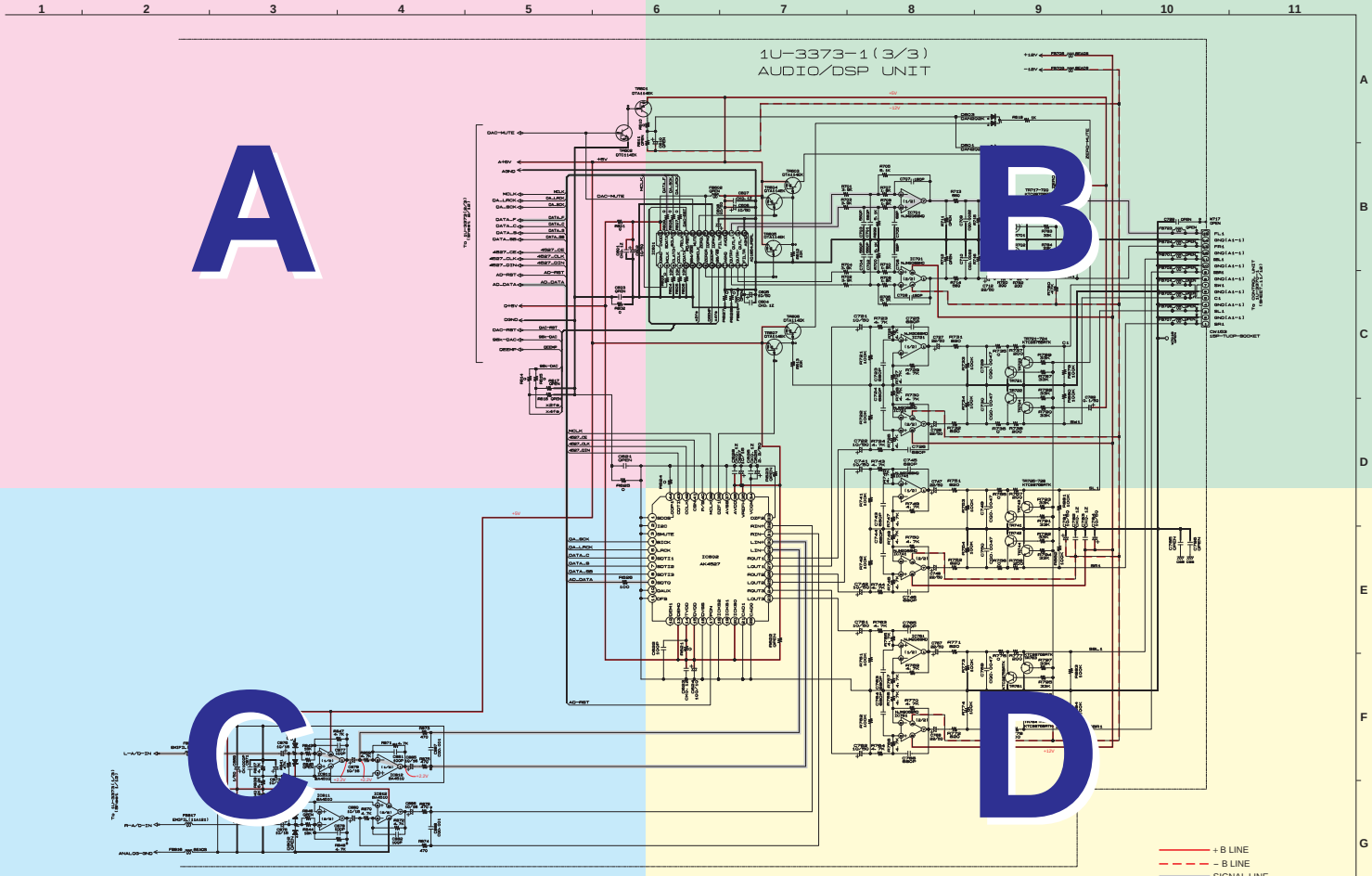

1U-3373-1(3/3)
AUDIO/DSP UNIT

+ B LINE
– B LINE
SIGNAL LINE

NOTICE
ALL RESISTANCE VALUES IN OHM. k=1,000 OHM M=1,000,000 OHM
ALL CAPACITANCE VALUES IN MICRO FARAD. P=MICRO-MICRO FARAD
EACH VOLTAGE AND CURRENT ARE MEASUERD AT MO SIGNAL INPUT CONDITION.
CIRCUIT AND PARTS ARE SUBJECT TO CHANGE WITHOUT PRIOR NOTICE.

WARNING:
Parts marked with this symbol ⚠ have critical characteristics.
Use ONLY replacement parts recommended by the manufacture.

CAUTION:
Before returning the unit to the customer, make sure you make either (1) a leakage current check or (2) a line to chassis resistance check. If the leakage current exceeds 0.5 milliamps, or if the resistance from chassis to either side of the power cord is less than 460kohms, the unit is defective.

WARNING:
DO NOT return the unit to the customer until the problem is located and corrected.

SCHEMATIC DIAGRAMS (3/12)
1U-3373-1(3/3) AUDIO / DSP UNIT

Downloaded from www.Manualslib.com manuals search engine

Downloaded from www.Manualslib.com manuals search engine